The EPA Administrator, Gina McCarthy, signed the following notice on 10/1/2015, and EPA is submitting it for publication in the *Federal Register* (FR). While we have taken steps to ensure the accuracy of this Internet version of the rule, it is not the official version of the rule for purposes of compliance. Please refer to the official version in a forthcoming FR publication, which will appear on the Government Printing Office's FDSys website (http://gpo.gov/fdsys/search/home.action) and on Regulations.gov (http://www.regulations.gov) in Docket No. EPA–HQ–OAR–2008-0699. Once the official version of this document is published in the FR, this version will be removed from the Internet and replaced with a link to the official version.

ENVIRONMENTAL PROTECTION AGENCY

40 CFR Parts 50, 51, 52, 53 and 58

[EPA-HQ-OAR-2008-0699; FRL-9913-18-OAR]

RIN 2060-AP38

National Ambient Air Quality Standards for Ozone

AGENCY: Environmental Protection Agency (EPA).

ACTION: Final rule.

SUMMARY: Based on its review of the air quality criteria for ozone (O_3) and related photochemical oxidants and national ambient air quality standards (NAAQS) for O_3, the Environmental Protection Agency (EPA) is revising the primary and secondary NAAQS for O_3 to provide requisite protection of public health and welfare, respectively. The EPA is revising the levels of both standards to 0.070 parts per million (ppm), and retaining their indicators (O_3), forms (fourth-highest daily maximum, averaged across three consecutive years) and averaging times (eight hours). The EPA is making corresponding revisions in data handling conventions for O_3 and changes to the Air Quality Index (AQI); revising regulations for the prevention of significant deterioration (PSD) program to add a transition provision for certain applications; and establishing exceptional events schedules and providing information related to implementing the revised standards. The EPA is also revising the O_3 monitoring seasons, the Federal Reference Method (FRM) for monitoring O_3 in the ambient air, Federal Equivalent Method (FEM) analyzer performance requirements, and the Photochemical Assessment Monitoring Stations (PAMS) network. Along with exceptional events schedules related to implementing the revised O_3

standards, the EPA is applying this same schedule approach to other future new or revised NAAQS and removing obsolete regulatory language for expired exceptional events deadlines. The EPA is making minor changes to the procedures and time periods for evaluating potential FRMs and equivalent methods, including making the requirements for nitrogen dioxide (NO_2) consistent with the requirements for O_3, and removing an obsolete requirement for the annual submission of Product Manufacturing Checklists by manufacturers of FRMs and FEMs for monitors of fine and coarse particulate matter. For a more detailed summary, see the Executive Summary below.

DATES: The final rule is effective on **[INSERT 60 DAYS AFTER DATE OF PUBLICATION IN THE FEDERAL REGISTER]**.

ADDRESSES: EPA has established a docket for this action (Docket ID No. EPA-HQ-OAR-2008-0699) and a separate docket, established for the Integrated Science Assessment (ISA) (Docket No. EPA-HQ-ORD-2011-0050), that has been incorporated by reference into the rulemaking docket. All documents in the docket are listed on the www.regulations.gov website. Although listed in the docket index, some information is not publicly available, e.g., confidential business information or other information whose disclosure is restricted by statute. Certain other material, such as copyrighted material, is not placed on the Internet and may be viewed, with prior arrangement, at the EPA Docket Center. Publicly available docket materials are available either electronically in www.regulations.gov or in hard copy at the Air and Radiation Docket and Information Center, EPA/DC, WJC West Building, Room 3334, 1301 Constitution Ave., NW, Washington, DC. The Public Reading Room is open from 8:30 a.m. to 4:30 p.m., Monday through Friday, excluding legal holidays. The telephone number for the Public Reading Room is (202) 566-1744 and the telephone number for the Air and Radiation Docket and Information

This document is a prepublication version, signed by EPA Administrator, Gina McCarthy on 10/1/2015. We have taken steps to ensure the accuracy of this version, but it is not the official version.

Center is (202) 566-1742. For additional information about EPA's public docket, visit the EPA Docket Center homepage at: http://www.epa.gov/epahome/dockets.htm.

FOR FURTHER INFORMATION CONTACT: Ms. Susan Lyon Stone, Health and Environmental Impacts Division, Office of Air Quality Planning and Standards, U.S. Environmental Protection Agency, Mail code C504-06, Research Triangle Park, NC 27711; telephone: (919) 541-1146; fax: (919) 541-0237; email: stone.susan@epa.gov.

SUPPLEMENTARY INFORMATION:

General Information

Availability of Related Information

A number of the documents that are relevant to this action are available through the EPA's Office of Air Quality Planning and Standards (OAQPS) Technology Transfer Network (TTN) website (http://www.epa.gov/ttn/naaqs/standards/ozone/s_o3_index.html). These documents include the *Integrated Science Assessment for Ozone* (U.S. EPA, 2013), available at http://www.epa.gov/ttn/naaqs/standards/ozone/s_o3_2008_isa.html; the *Health Risk and Exposure Assessment* and the *Welfare Risk and Exposure Assessment for Ozone,* Final Reports (HREA and WREA, respectively; U.S. EPA, 2014a, 2014b), available at http://www.epa.gov/ttn/naaqs/standards/ozone/s_o3_2008_rea.html; and the *Policy Assessment for the Review of the Ozone National Ambient Air Quality Standards* (PA; U.S. EPA, 2014c), available at http://www.epa.gov/ttn/naaqs/standards/ozone/s_o3_2008_pa.html. These and other related documents are also available for inspection and copying in the EPA docket identified above.

Table of Contents

The following topics are discussed in this preamble:

This document is a prepublication version, signed by EPA Administrator, Gina McCarthy on 10/1/2015. We have taken steps to ensure the accuracy of this version, but it is not the official version.

Executive Summary
I. Background
A. Legislative Requirements
B. Related Control Programs
C. Review of Air Quality Criteria and Standards for O_3
D. Ozone Air Quality
E. Summary of Proposed Revisions to the O_3 Standards
F. Organization and Approach to Decisions in this O_3 NAAQS Review
II. Rationale for Decision on the Primary Standard
A. Introduction
1. Overview of Health Effects Evidence
2. Overview of Human Exposure and Health Risk Assessments
B. Need for Revision of the Primary Standard
1. Basis for Proposed Decision
2. Comments on the Need for Revision
3. Administrator's Conclusions on the Need for Revision
C. Conclusions on the Elements of a Revised Primary Standard
1. Indicator
2. Averaging Time
3. Form
4. Level
D. Decision on the Primary Standard
III. Communication of Public Health Information
A. Proposed Revisions to the AQI
B. Comments on Proposed Revisions to the AQI
C. Final Revisions to the AQI
IV. Rationale for Decision on the Secondary Standard
A. Introduction
1. Overview of Welfare Effects Evidence
2. Overview of Welfare Exposure and Risk Assessment
3. Potential Impacts on Public Welfare
B. Need for Revision of the Secondary Standard
1. Basis for Proposed Decision
2. Comments on the Need for Revision
3. Administrator's Conclusions on the Need for Revision
C. Conclusions on Revision of the Secondary Standard
1. Basis for Proposed Revision
2. Comments on Proposed Revision
3. Administrator's Conclusions on Revision
D. Decision on the Secondary Standard
V. Appendix U: Interpretation of the Primary and Secondary NAAQS for O_3
A. Background
B. Data Selection Requirements
C. Data Reporting and Data handling Requirements
D. Exceptional Events Information Submission Schedule

This document is a prepublication version, signed by EPA Administrator, Gina McCarthy on 10/1/2015. We have taken steps to ensure the accuracy of this version, but it is not the official version.

VI. Ambient Monitoring Related to O_3 Standards
A. Background
B. Revisions to the Length of the Required O_3 Monitoring Seasons
1. Proposed Changes to the Length of the Required O_3 Monitoring Seasons
2. Comments on the Length of the Required O_3 Monitoring Seasons
3. Final Decisions on the Length of the Required O_3 Monitoring Seasons
C. Revisions to the PAMS Network Requirements
1. Network Design
2. Speciated VOC Measurements
3. Carbonyl Measurements
4. Nitrogen Oxides Measurements
5. Meteorology Measurements
6. PAMS Season
7. Timing and Other Implementation Issues
D. Addition of a New FRM for O_3
1. Proposed Changes to the FRM for O_3
2. Comments on the FRM for O_3
E. Revisions to the Analyzer Performance Requirements
1. Proposed Changes to the Analyzer Performance Requirements
2. Comments on the Analyzer Performance Requirements
VII. Grandfathering Provision for Certain PSD Permits
A. Summary of the Proposed Grandfathering Provision
B. Comments and Responses
C. Final Action and Rationale
VIII. Implementation of the Revised O_3 Standards
A. NAAQS Implementation Plans
1. Cooperative Federalism
2. Additional New Rules and Guidance
3. Background O_3
4. Section 110 State Implementation Plans
5. Nonattainment Area Requirements
B. O_3 Air Quality Designations
1. Area Designation Process
2. Exceptional Events
C. How do the New Source Review (NSR) Requirements apply to the Revised O_3 NAAQS?
1. NSR Requirements for Major Stationary Sources for the Revised O_3 NAAQS
2. Prevention of Significant Deterioration (PSD) Program
3. Nonattainment NSR
D. Transportation and General Conformity
1. What are Transportation and General Conformity?
2. When Would Transportation and General Conformity Apply to Areas Designated Nonattainment for the Revised O_3 NAAQS?
3. Impact of a Revised O_3 NAAQS on a State's Existing Transportation and/or General Conformity SIP.

This document is a prepublication version, signed by EPA Administrator, Gina McCarthy on 10/1/2015. We have taken steps to ensure the accuracy of this version, but it is not the official version.

E. Regional and International Pollution Transport
1. Interstate Transport
2. International Transport
IX. Statutory and Executive Order Reviews
A. Executive Order 12866: Regulatory Planning and Review and Executive Order 13563: Improving Regulation and Regulatory Review
B. Paperwork Reduction Act
C. Regulatory Flexibility Act
D. Unfunded Mandates Reform Act
E. Executive Order 13132: Federalism
F. Executive Order 13175: Consultation and Coordination with Indian Tribal Governments
G. Executive Order 13045: Protection of Children from Environmental Health & Safety Risks
H. Executive Order 13211: Actions that Significantly Affect Energy Supply, Distribution, or Use
I. National Technology Transfer and Advancement Act
J. Executive Order 12898: Federal Actions to Address Environmental Justice in Minority Populations and Low-Income Populations
K. Congressional Review Act (CRA)
References

Executive Summary

This section summarizes information about the purpose of this regulatory action, the major provisions of this action, and provisions related to implementation.

Purpose of This Regulatory Action

Sections 108 and 109 of the Clean Air Act (CAA) govern the establishment, review, and revision, as appropriate, of the NAAQS to protect public health and welfare. The CAA requires the EPA to periodically review the air quality criteria—the science upon which the standards are based—and the standards themselves. This rulemaking is being conducted pursuant to these statutory requirements. The schedule for completing this review is established by a federal court order, which requires that the EPA make a final determination by October 1, 2015.

The EPA completed its most recent review of the NAAQS for O_3 in 2008. As a result of that review, EPA took four principal actions: (1) revised the level of the 8-hour primary standard

This document is a prepublication version, signed by EPA Administrator, Gina McCarthy on 10/1/2015. We have taken steps to ensure the accuracy of this version, but it is not the official version.

to 0.075 ppm; (2) expressed the standard to three decimal places; (3) revised the 8-hour secondary standard by making it identical to the revised primary standard; and (4) made conforming changes to the AQI.

In subsequent litigation, the U.S. Court of Appeals for the District of Columbia Circuit (D.C. Circuit) upheld the EPA's 2008 primary standard but remanded the 2008 secondary standard. *Mississippi v. EPA*, 744 F. 3d 1334 (D.C. Cir. 2013). With respect to the primary standard, the court held that the EPA reasonably determined that the existing primary standard, set in 1997, did not protect public health with an adequate margin of safety and required revision. In upholding the EPA's revised primary standard, the court dismissed arguments that the EPA should have adopted a more stringent standard. The court remanded the secondary standard to the EPA after finding that the EPA's justification for setting the secondary standard identical to the revised 8-hour primary standard violated the CAA because the EPA had not adequately explained how that standard provided the required public welfare protection. In remanding the 2008 secondary standard, the court did not vacate it. The EPA has addressed the court's remand with this final action.

This final action reflects the Administrator's conclusions based on a review of the O_3 NAAQS that began in September 2008, and also concludes the EPA's reconsideration of the 2008 decision that it initiated in 2009 and subsequently consolidated with the current review. In conducting this review, the EPA has carefully evaluated the currently available scientific literature on the health and welfare effects of O_3, focusing particularly on the new literature available since the conclusion of the previous review in 2008. Between 2008 and 2014, the EPA prepared draft and final versions of the Integrated Science Assessment, the Health and Welfare Risk and Exposure Assessments, and the Policy Assessment. Multiple drafts of these documents

This document is a prepublication version, signed by EPA Administrator, Gina McCarthy on 10/1/2015. We have taken steps to ensure the accuracy of this version, but it is not the official version.

were subject to public review and comment, and, as required by the CAA, were peer-reviewed by the Clean Air Scientific Advisory Committee (CASAC), an independent scientific advisory committee established pursuant to the CAA and charged with providing advice to the Administrator.

The EPA proposed revisions to the primary and secondary O_3 NAAQS on December 17, 2014 (79 FR 75234), and provided a 3-month period for submission of comments from the public. In addition to written comments submitted to EPA, comments were also provided at public hearings held in Washington, DC, and Arlington, Texas, on January 29, 2015, and in Sacramento, California, on February 2, 2015. After consideration of public comments and the advice from the CASAC, the EPA has developed this final rulemaking, which is the final step in the review process.

In this rulemaking, the EPA is revising the suite of standards for O_3 to provide requisite protection of public health and welfare. In addition, the EPA is updating the AQI, and making changes in the data handling conventions and ambient air monitoring, reporting, and network design requirements to correspond with the changes to the O_3 NAAQS.

Summary of Major Provisions

With regard to the primary standard, the EPA is revising the level of the standard to 0.070 ppm to provide increased public health protection against health effects associated with long- and short-term exposures. The EPA is retaining the indicator (O_3), averaging time (8-hour) and form (annual fourth-highest daily maximum, averaged over 3 years) of the existing standard. This action provides increased protection for children, older adults, and people with asthma or other lung diseases, and other at-risk populations against an array of adverse health effects that include reduced lung function, increased respiratory symptoms and pulmonary inflammation;

This document is a prepublication version, signed by EPA Administrator, Gina McCarthy on 10/1/2015. We have taken steps to ensure the accuracy of this version, but it is not the official version.

effects that contribute to emergency department visits or hospital admissions; and mortality.

The decisions on the adequacy of the current standard and the appropriate level for the revised standard are based on an integrative assessment of an extensive body of new scientific evidence, which substantially strengthens what was known about O_3-related health effects in the last review. The revised standard also reflects consideration of a quantitative risk assessment that estimates public health risks likely to remain upon just meeting the current and various alternative standards. Based on this information, the Administrator concludes that the current primary O_3 standard is not requisite to protect public health with an adequate margin of safety, as required by the CAA, and that revision of the level to 0.070 ppm is warranted to provide the appropriate degree of increased public health protection for at-risk populations against an array of adverse health effects. In concluding that a revised primary standard set at a level of 0.070 ppm is requisite to protect public health with an adequate margin of safety, the Administrator relies on several key pieces of information, including: (a) a level of 0.070 ppm is well below the O_3 exposure concentration shown to cause the widest range of respiratory effects (i.e., 0.080 ppm) and is below the lowest O_3 exposure concentration shown to cause the adverse combination of decreased lung function and increased respiratory symptoms (i.e., 0.072 ppm); (b) a level of 0.070 ppm will eliminate, or nearly eliminate, repeated occurrence of these O_3 exposure concentrations (this is important because the potential for adverse effects increases with frequency of occurrence); (c) a level of 0.070 ppm will protect the large majority of the population, including children and people with asthma, from lower exposure concentrations, which can cause lung function decrements and airway inflammation in some people (i.e., 0.060 ppm); and (d) a level of 0.070 ppm will result in important reductions in the risk of O_3-induced lung function decrements as well as the risk of O_3-associated hospital admissions, emergency

This document is a prepublication version, signed by EPA Administrator, Gina McCarthy on 10/1/2015. We have taken steps to ensure the accuracy of this version, but it is not the official version.

department visits, and mortality. In addition, the revised level of the primary standard is within the range that CASAC advised the Agency to consider.

The EPA is also revising the level of the secondary standard to 0.070 ppm to provide increased protection against vegetation-related effects on public welfare. The EPA is retaining the indicator (O_3), averaging time (8-hour) and form (annual fourth-highest daily maximum, averaged over 3 years) of the existing secondary standard. This action, reducing the level of the standard, provides increased protection for natural forests in Class I and other similarly protected areas against an array of vegetation-related effects of O_3. The Administrator is making this decision based on judgments regarding the currently available welfare effects evidence, the appropriate degree of public welfare protection for the revised standard, and currently available air quality information on seasonal cumulative exposures that may be allowed by such a standard.

In making this decision on the secondary standard, the Administrator focuses on O_3 effects on tree seedling growth as a proxy for the full array of vegetation-related effects of O_3, ranging from effects on sensitive species to broader ecosystem-level effects. Using this proxy in judging effects to public welfare, the Administrator has concluded that the requisite protection will be provided by a standard that generally limits cumulative seasonal exposures to 17 ppm-hours (ppm-hrs) or lower, in terms of a 3-year W126 index. Based on air quality analyses which indicate such control of cumulative seasonal exposures will be achieved with a standard set at a level of 0.070 ppm (and the same indicator, averaging time, and form as the current standard), the Administrator concludes that a standard revised in this way will provide the requisite protection. In addition to providing protection of natural forests from growth-related effects, the revised standard is also expected to provide increased protection from other effects, of potential

This document is a prepublication version, signed by EPA Administrator, Gina McCarthy on 10/1/2015. We have taken steps to ensure the accuracy of this version, but it is not the official version.

public welfare significance, including crop yield loss and visible foliar injury. Thus, based on all of the information available in this review, the Administrator concludes that the current secondary O_3 standard is not requisite to protect public welfare as required by the CAA, and that this revision will provide appropriate protection against known or anticipated adverse effects to the public welfare.

Provisions Related to Implementation

As directed by the CAA, reducing pollution to meet NAAQS always has been a shared task, one involving the federal government, states, tribes and local air agencies. This partnership has proved effective since the EPA first issued O_3 standards more than three decades ago, and is evidenced by significantly lower O_3 levels throughout the country. To provide a foundation that helps air agencies build successful strategies for attaining new O_3 standards, the EPA will continue to move forward with federal regulatory programs, such as the final Tier 3 motor vehicle emissions standards. To facilitate the development of CAA-compliant implementation plans and strategies to attain new standards, the EPA intends to issue timely and appropriate implementation guidance and, where appropriate and consistent with the law, new rulemakings to streamline regulatory burdens and provide flexibility in implementation. Given the regional nature of O_3 air pollution, the EPA will continue to work with states to address interstate transport of O_3 and O_3 precursors. The EPA also intends to work closely with states to identify locations affected by high background concentrations on high O_3 days due to stratospheric intrusions of O_3, wildfire O_3 plumes, or long-range transport of O_3 from sources outside the U.S. and ensure that the appropriate CAA regulatory mechanisms are employed. To this end, the EPA will be proposing revisions to the 2007 Exceptional Events Rule and related draft guidance addressing the effects of wildfires.

This document is a prepublication version, signed by EPA Administrator, Gina McCarthy on 10/1/2015. We have taken steps to ensure the accuracy of this version, but it is not the official version.

In addition to revising the primary and secondary standards, this action is changing the AQI to reflect the revisions to the primary standard and also making corresponding revisions in data handling conventions for O_3, extending the O_3 monitoring season in 33 states, revising the requirements for the PAMS network, and revising regulations for the PSD permitting program to add a provision grandfathering certain pending permits from certain requirements with respect to the revised standards. The preamble also provides schedules and information related to implementing the revised standards. The rule also contains revisions to the schedules associated with exceptional events demonstration submittals for the revised O_3 standards and other future revised NAAQS, and makes minor changes related to monitoring for other pollutants.

I. Background

A. Legislative Requirements

Two sections of the CAA govern the establishment and revision of the NAAQS. Section 108 (42 U.S.C. section 7408) directs the Administrator to identify and list certain air pollutants and then to issue air quality criteria for those pollutants. The Administrator is to list those air pollutants that in her "judgment, cause or contribute to air pollution which may reasonably be anticipated to endanger public health or welfare;" "the presence of which in the ambient air results from numerous or diverse mobile or stationary sources;" and "for which . . . [the Administrator] plans to issue air quality criteria…." Air quality criteria are intended to "accurately reflect the latest scientific knowledge useful in indicating the kind and extent of all identifiable effects on public health or welfare which may be expected from the presence of [a] pollutant in the ambient air . . ." 42 U.S.C. § 7408(b). Section 109 (42 U.S.C. 7409) directs the Administrator to propose and promulgate "primary" and "secondary" NAAQS for pollutants for which air quality criteria are issued. Section 109(b)(1) defines a primary standard as one "the

This document is a prepublication version, signed by EPA Administrator, Gina McCarthy on 10/1/2015. We have taken steps to ensure the accuracy of this version, but it is not the official version.

attainment and maintenance of which in the judgment of the Administrator, based on such criteria and allowing an adequate margin of safety, are requisite to protect the public health."[1] A secondary standard, as defined in section 109(b)(2), must "specify a level of air quality the attainment and maintenance of which, in the judgment of the Administrator, based on such criteria, is requisite to protect the public welfare from any known or anticipated adverse effects associated with the presence of [the] pollutant in the ambient air."[2]

The requirement that primary standards provide an adequate margin of safety was intended to address uncertainties associated with inconclusive scientific and technical information available at the time of standard setting. It was also intended to provide a reasonable degree of protection against hazards that research has not yet identified. See *Mississippi v. EPA*, 744 F. 3d 1334, 1353 (D.C. Cir. 2013); *Lead Industries Association v. EPA*, 647 F.2d 1130, 1154 (D.C. Cir 1980); *American Petroleum Institute v. Costle*, 665 F.2d 1176, 1186 (D.C. Cir. 1981); *American Farm Bureau Federation v. EPA*, 559 F. 3d 512, 533 (D.C. Cir. 2009); *Association of Battery Recyclers v. EPA*, 604 F. 3d 613, 617-18 (D.C. Cir. 2010). Both kinds of uncertainties are components of the risk associated with pollution at levels below those at which human health effects can be said to occur with reasonable scientific certainty. Thus, in selecting primary standards that provide an adequate margin of safety, the Administrator is seeking not only to

[1] The legislative history of section 109 indicates that a primary standard is to be set at "the maximum permissible ambient air level . . . which will protect the health of any [sensitive] group of the population," and that, for this purpose, "reference should be made to a representative sample of persons comprising the sensitive group rather than to a single person in such a group." S. Rep. No. 91-1196, 91st Cong., 2d Sess. 10 (1970).

[2] Welfare effects as defined in section 302(h) (42 U.S.C. 7602(h)) include, but are not limited to, "effects on soils, water, crops, vegetation, man-made materials, animals, wildlife, weather, visibility and climate, damage to and deterioration of property, and hazards to transportation, as well as effects on economic values and on personal comfort and well-being."

This document is a prepublication version, signed by EPA Administrator, Gina McCarthy on 10/1/2015. We have taken steps to ensure the accuracy of this version, but it is not the official version.

prevent pollution levels that have been demonstrated to be harmful but also to prevent lower pollutant levels that may pose an unacceptable risk of harm, even if the risk is not precisely identified as to nature or degree. The CAA does not require the Administrator to establish a primary NAAQS at a zero-risk level or at background concentrations, see *Lead Industries v. EPA*, 647 F.2d at 1156 n.51; *Mississippi v. EPA*, 744 F. 3d at 1351, but rather at a level that reduces risk sufficiently so as to protect public health with an adequate margin of safety.

In addressing the requirement for an adequate margin of safety, the EPA considers such factors as the nature and severity of the health effects, the size of sensitive population(s)[3] at risk, and the kind and degree of the uncertainties that must be addressed. The selection of any particular approach for providing an adequate margin of safety is a policy choice left specifically to the Administrator's judgment. See *Lead Industries Association v. EPA*, 647 F.2d at 1161-62; *Mississippi*, 744 F. 3d at 1353.

In setting primary and secondary standards that are "requisite" to protect public health and welfare, respectively, as provided in section 109(b), the EPA's task is to establish standards that are neither more nor less stringent than necessary for these purposes. In so doing, the EPA may not consider the costs of implementing the standards. See generally, *Whitman v. American Trucking Associations*, 531 U.S. 457, 465-472, 475-76 (2001). Likewise, "[a]ttainability and technological feasibility are not relevant considerations in the promulgation of national ambient air quality standards." *American Petroleum Institute v. Costle*, 665 F. 2d at 1185.

Section 109(d)(1) requires that "not later than December 31, 1980, and at 5-year intervals

[3] As used here with regard to human populations, and similarly throughout this document, the term "population" refers to people having a quality or characteristic in common, including a specific pre-existing illness or a specific age or lifestage.

This document is a prepublication version, signed by EPA Administrator, Gina McCarthy on 10/1/2015. We have taken steps to ensure the accuracy of this version, but it is not the official version.

thereafter, the Administrator shall complete a thorough review of the criteria published under section 108 and the national ambient air quality standards . . . and shall make such revisions in such criteria and standards and promulgate such new standards as may be appropriate . . . ." Section 109(d)(2) requires that an independent scientific review committee "shall complete a review of the criteria . . . and the national primary and secondary ambient air quality standards . . . and shall recommend to the Administrator any new . . . standards and revisions of existing criteria and standards as may be appropriate . . . ." Since the early 1980's, the CASAC[4] has performed this independent review function.

B. Related Control Programs

States are primarily responsible for ensuring attainment and maintenance of NAAQS once the EPA has established them. The EPA performs an oversight function, and as necessary takes actions to ensure CAA objectives are achieved. Under section 110 of the CAA, and related provisions, states submit, for the EPA's approval, state implementation plans (SIPs) that provide for the attainment and maintenance of such standards through control programs directed to sources of the relevant pollutants. The states, in conjunction with the EPA, also administer the PSD program (CAA sections 160 to 169) which is a pre-construction permit program designed to prevent significant deterioration in air quality. In addition, federal programs provide for nationwide reductions in emissions of O_3 precursors and other air pollutants through new source performance standards for stationary sources under section 111 of the CAA and the federal motor vehicle and motor vehicle fuel control program under title II of the CAA (sections 202 to 250), which involves controls for emissions from mobile sources and controls for the fuels used

[4] Lists of CASAC members and of members of the CASAC Ozone Review Panel are accessible from: http://yosemite.epa.gov/sab/sabpeople.nsf/WebCommittees/CASAC.

This document is a prepublication version, signed by EPA Administrator, Gina McCarthy on 10/1/2015. We have taken steps to ensure the accuracy of this version, but it is not the official version.

by these sources. For some stationary sources, the national emissions standards for hazardous air pollutants under section 112 of the CAA may provide ancillary reductions in O_3 precursors.

After the EPA establishes a new or revised NAAQS, the CAA directs the EPA and the states to take steps to ensure that the new or revised NAAQS are met. One of the first steps, known as the initial area designations, involves identifying areas of the country that are not meeting the new or revised NAAQS along with the nearby areas that contain emissions sources that contribute to the areas not meeting the NAAQS. For areas designated "nonattainment," the responsible states are required to develop SIPs to attain the standards. In developing their attainment plans, states first take into account projected emission reductions from federal and state rules that have been already adopted at the time of plan submittal. A number of significant emission reduction programs that will lead to reductions of O_3 precursors are in place today or are expected to be in place by the time revised SIPs will be due. Examples of such rules include the Nitrogen Oxides (NO_X) SIP Call and Cross-State Air Pollution Rule (CSAPR),[5] regulations controlling on-road and non-road engines and fuels, hazardous air pollutant rules for utility and industrial boilers, and various other programs already adopted by states to reduce emissions from key emissions sources. States will then evaluate the level of additional emission reductions needed for each nonattainment area to attain the O_3 standards "as expeditiously as practicable," and adopt new state regulations as appropriate. Section VIII of this preamble includes additional

[5] The Cross-State Air Pollution Rule was upheld by the Supreme Court in *Environmental Protection Agency v. EME Homer City Generation, L.P.*, 134 S. Ct. 1584 (2014), and remanded to the D.C. Circuit for further proceedings. The D.C. Circuit issued its decision on remand from the Supreme Court on July 28, 2015, remanding CSAPR to EPA, without vacating the rule, for EPA to reconsider certain emission budgets for certain States (*EME Homer City Generation, L.P. v. Environmental Protection Agency*, No. 11-1302, 2015 WL 4528137 [D.C. Cir. July 28, 2015]).

This document is a prepublication version, signed by EPA Administrator, Gina McCarthy on 10/1/2015. We have taken steps to ensure the accuracy of this version, but it is not the official version.

discussion of designation and implementation issues associated with the revised O_3 NAAQS.

C. Review of Air Quality Criteria and Standards for O_3

The EPA first established primary and secondary NAAQS for photochemical oxidants in 1971 (36 FR 8186, April 30, 1971). The EPA set both primary and secondary standards at 0.08 ppm,[6] as a 1-hour average of total photochemical oxidants, not to be exceeded more than one hour per year. The EPA based the standards on scientific information contained in the 1970 *Air Quality Criteria for Photochemical Oxidants* (AQCD; U.S. DHEW, 1970). The EPA initiated the first periodic review of the NAAQS for photochemical oxidants in 1977. Based on the 1978 AQCD (U.S. EPA, 1978), the EPA published proposed revisions to the original NAAQS in 1978 (43 FR 26962, June 22, 1978) and final revisions in 1979 (44 FR 8202, February 8, 1979). At that time, the EPA revised the level of the primary and secondary standards from 0.08 to 0.12 ppm and changed the indicator from photochemical oxidants to O_3, and the form of the standards from a deterministic (i.e., not to be exceeded more than one hour per year) to a statistical form. This statistical form defined attainment of the standards as occurring when the expected number of days per calendar year with maximum hourly average concentration greater than 0.12 ppm equaled one or less.

Following the EPA's decision in the 1979 review, the city of Houston challenged the Administrator's decision arguing that the standard was arbitrary and capricious because natural O_3 concentrations and other physical phenomena in the Houston area made the standard unattainable in that area. The U.S. Court of Appeals for the District of Columbia Circuit (D.C.

[6] Although the level of the 2008 O_3 standards are specified in the units of ppm (i.e., 0.075 ppm), O_3 concentrations are described using the units of parts per billion (ppb) in several sections of this notice (i.e., sections II, III, IV and VI) for consistency with the common convention for information discussed in those sections. In ppb, 0.075 ppm is equivalent to 75.

This document is a prepublication version, signed by EPA Administrator, Gina McCarthy on 10/1/2015. We have taken steps to ensure the accuracy of this version, but it is not the official version.

Circuit) rejected this argument, holding (as noted above) that attainability and technological feasibility are not relevant considerations in the promulgation of the NAAQS. The court also noted that the EPA need not tailor the NAAQS to fit each region or locale, pointing out that Congress was aware of the difficulty in meeting standards in some locations and had addressed this difficulty through various compliance related provisions in the CAA. See *API v. Costle*, 665 F.2d 1176, 1184-6 (D.C. Cir. 1981).

In 1982, the EPA announced plans to revise the 1978 AQCD (47 FR 11561; March 17, 1982), and, in 1983, the EPA initiated the second periodic review of the O_3 NAAQS (48 FR 38009; August 22, 1983). The EPA subsequently published the 1986 AQCD (U.S. EPA, 1986) and the 1989 Staff Paper (U.S. EPA, 1989). Following publication of the 1986 AQCD, a number of scientific abstracts and articles were published that appeared to be of sufficient importance concerning potential health and welfare effects of O_3 to warrant preparation of a Supplement (U.S. EPA, 1992). In August of 1992, under the terms of a court order, the EPA proposed to retain the existing primary and secondary standards based on the health and welfare effects information contained in the 1986 AQCD and its 1992 Supplement (57 FR 35542, August 10, 1992). In March 1993, the EPA announced its decision to conclude this review by affirming its proposed decision to retain the standards, without revision (58 FR 13008, March 9, 1993).

In the 1992 notice of its proposed decision in that review, the EPA announced its intention to proceed as rapidly as possible with the next review of the air quality criteria and standards for O_3 in light of emerging evidence of health effects related to 6- to 8-hour O_3 exposures (57 FR 35542, August 10, 1992). The EPA subsequently published the AQCD and Staff Paper for the review (U.S. EPA, 1996a,b). In December 1996, the EPA proposed revisions to both the primary and secondary standards (61 FR 65716, December 13, 1996). With regard to

This document is a prepublication version, signed by EPA Administrator, Gina McCarthy on 10/1/2015. We have taken steps to ensure the accuracy of this version, but it is not the official version.

the primary standard, the EPA proposed to replace the then-existing 1-hour primary standard with an 8-hour standard set at a level of 0.08 ppm (equivalent to 0.084 ppm based on the proposed data handling convention) as a 3-year average of the annual third-highest daily maximum 8-hour concentration. The EPA proposed to revise the secondary standard either by setting it identical to the proposed new primary standard or by setting it as a new seasonal standard using a cumulative form. The EPA completed this review in 1997 by setting the primary standard at a level of 0.08 ppm, based on the annual fourth-highest daily maximum 8-hour average concentration, averaged over three years, and setting the secondary standard identical to the revised primary standard (62 FR 38856, July 18, 1997). In reaching her decision on the primary standard, the Administrator identified several reasons supporting her decision to reject a potential alternate standard set at 0.07 ppm, including first the fact that no CASAC panel member supported a standard level lower than 0.08 ppm and her consideration of the scientific uncertainties with regard to the health effects evidence for exposure concentrations below 0.08 ppm. In addition to those reasons, the Administrator noted that a standard set at a level of 0.07 ppm would be closer to peak background concentrations that infrequently occur in some areas due to nonanthropogenic sources of O_3 precursors (62 FR 38856, 38868; July 18, 1997).

On May 14, 1999, in response to challenges by industry and others to the EPA's 1997 decision, the D.C. Circuit remanded the O_3 NAAQS to the EPA, finding that section 109 of the CAA, as interpreted by the EPA, effected an unconstitutional delegation of legislative authority. *American Trucking Assoc. vs. EPA*, 175 F.3d 1027, 1034-1040 (D.C. Cir. 1999) ("*ATA I*"). In addition, the court directed that, in responding to the remand, the EPA should consider the potential beneficial health effects of O_3 pollution in shielding the public from the effects of solar ultraviolet (UV) radiation, as well as adverse health effects. *Id.* at 1051-53. In 1999, the EPA

This document is a prepublication version, signed by EPA Administrator, Gina McCarthy on 10/1/2015. We have taken steps to ensure the accuracy of this version, but it is not the official version.

petitioned for rehearing *en banc* on several issues related to that decision. The court granted the request for rehearing in part and denied it in part, but declined to review its ruling with regard to the potential beneficial effects of O_3 pollution. 195 F. 3d 4, 10 (D.C Cir., 1999) ("*ATA II*"). On January 27, 2000, the EPA petitioned the U.S. Supreme Court for *certiorari* on the constitutional issue (and two other issues), but did not request review of the ruling regarding the potential beneficial health effects of O_3. On February 27, 2001, the U.S. Supreme Court unanimously reversed the judgment of the D.C. Circuit on the constitutional issue. *Whitman v. American Trucking Assoc*., 531 U. S. 457, 472-74 (2001) (holding that section 109 of the CAA does not delegate legislative power to the EPA in contravention of the Constitution). The Court remanded the case to the D.C. Circuit to consider challenges to the O_3 NAAQS that had not been addressed by that court's earlier decisions. On March 26, 2002, the D.C. Circuit issued its final decision on remand, finding the 1997 O_3 NAAQS to be "neither arbitrary nor capricious," and so denying the remaining petitions for review. *American Trucking Associations, Inc. v EPA*, 283 F.3d 355, 379 (D.C Cir., 2002)("*ATA III*").

Specifically, in *ATA III*, the D.C. Circuit upheld the EPA's decision on the 1997 O_3 standard as the product of reasoned decision making. With regard to the primary standard, the court made clear that the most important support for EPA's decision to revise the standard was the health evidence of insufficient protection afforded by the then-existing standard ("the record is replete with references to studies demonstrating the inadequacies of the old one-hour standard"), as well as extensive information supporting the change to an 8-hour averaging time (283 F. 3d at 378). The court further upheld the EPA's decision not to select a more stringent level for the primary standard noting "the absence of any human clinical studies at ozone concentrations below 0.08 [ppm]" which supported the EPA's conclusion that "the most serious

This document is a prepublication version, signed by EPA Administrator, Gina McCarthy on 10/1/2015. We have taken steps to ensure the accuracy of this version, but it is not the official version.

health effects of ozone are 'less certain' at low concentrations, providing an eminently rational reason to set the primary standard at a somewhat higher level, at least until additional studies become available" (283 F. 3d at 378, internal citations omitted). The court also pointed to the significant weight that the EPA properly placed on the advice it received from CASAC (283 F. 3d at 379). In addition, the court noted that "although relative proximity to peak background O_3 concentrations did not, in itself, necessitate a level of 0.08 [ppm], the EPA could consider that factor when choosing among the three alternative levels" (283 F. 3d at 379).

Independently of the litigation, the EPA responded to the court's remand to consider the potential beneficial health effects of O_3 pollution in shielding the public from effects of UV radiation. The EPA provisionally determined that the information linking changes in patterns of ground-level O_3 concentrations to changes in relevant patterns of exposures to UV radiation of concern to public health was too uncertain, at that time, to warrant any relaxation in 1997 O_3 NAAQS. The EPA also expressed the view that any plausible changes in UV-B radiation exposures from changes in patterns of ground-level O_3 concentrations would likely be very small from a public health perspective. In view of these findings, the EPA proposed to leave the 1997 primary standard unchanged (66 FR 57268, Nov. 14, 2001). After considering public comment on the proposed decision, the EPA published its final response to this remand in 2003, re-affirming the 8-hour primary standard set in 1997 (68 FR 614, January 6, 2003).

The EPA initiated the fourth periodic review of the air quality criteria and standards for O_3 with a call for information in September 2000 (65 FR 57810, September, 26, 2000). The schedule for completion of that review was ultimately governed by a consent decree resolving a lawsuit filed in March 2003 by plaintiffs representing national environmental and public health organizations, who maintained that the EPA was in breach of a nondiscretionary duty to

This document is a prepublication version, signed by EPA Administrator, Gina McCarthy on 10/1/2015. We have taken steps to ensure the accuracy of this version, but it is not the official version.

complete review of the O_3 NAAQS within a statutorily mandated deadline. In 2007, the EPA proposed to revise the level of the primary standard within a range of 0.075 to 0.070 ppm (72 FR 37818, July 11, 2007). The EPA proposed to revise the secondary standard either by setting it identical to the proposed new primary standard or by setting it as a new seasonal standard using a cumulative form. Documents supporting these proposed decisions included the 2006 AQCD (U.S. EPA, 2006a) and 2007 Staff Paper (U.S EPA, 2007) and related technical support documents. The EPA completed the review in March 2008 by revising the level of the primary standard from 0.08 ppm to 0.075 ppm, and revising the secondary standard to be identical to the revised primary standard (73 FR 16436, March 27, 2008).

In May 2008, state, public health, environmental, and industry petitioners filed suit challenging the EPA's final decision on the 2008 O_3 standards. On September 16, 2009, the EPA announced its intention to reconsider the 2008 O_3 standards, and initiated a rulemaking to do so. At the EPA's request, the court held the consolidated cases in abeyance pending the EPA's reconsideration of the 2008 decision.

On January 2010, the EPA issued a notice of proposed rulemaking to reconsider the 2008 final decision (75 FR 2938, January 19, 2010). In that notice, the EPA proposed that further revisions of the primary and secondary standards were necessary to provide a requisite level of protection to public health and welfare. The EPA proposed to revise the level of the primary standard from 0.075 ppm to a level within the range of 0.060 to 0.070 ppm, and to revise the secondary standard to one with a cumulative, seasonal form. At the EPA's request, the CASAC reviewed the proposed rule at a public teleconference on January 25, 2010 and provided additional advice in early 2011 (Samet, 2010, 2011). After considering comments from CASAC and the public, the EPA prepared a draft final rule, which was submitted for interagency review

This document is a prepublication version, signed by EPA Administrator, Gina McCarthy on 10/1/2015. We have taken steps to ensure the accuracy of this version, but it is not the official version.

pursuant to Executive Order 12866. On September 2, 2011, consistent with the direction of the President, the Administrator of the Office of Information and Regulatory Affairs, Office of Management and Budget (OMB), returned the draft final rule to the EPA for further consideration. In view of this return and the fact that the Agency's next periodic review of the O_3 NAAQS required under CAA section 109 had already begun (as announced on September 29, 2008), the EPA decided to consolidate the reconsideration with its statutorily required periodic review.[7]

In light of the EPA's decision to consolidate the reconsideration with the current review, the D.C. Circuit proceeded with the litigation on the 2008 final decision. On July 23, 2013, the court upheld the EPA's 2008 primary O_3 standard, but remanded the 2008 secondary standard to the EPA (*Mississippi v. EPA*, 744 F. 3d 1334). With respect to the primary standard, the court first held that the EPA reasonably determined that the existing standard was not requisite to protect public health with an adequate margin of safety, and consequently required revision. Specifically, the court noted that there were "numerous epidemiologic studies linking health effects to exposure to ozone levels below 0.08 ppm and clinical human exposure studies finding a causal relationship between health effects and exposure to ozone levels at and below 0.08 ppm" (*Mississippi v. EPA*, 744 F. 3d at 1345). The court also specifically endorsed the weight of evidence approach utilized by the EPA in its deliberations (*Mississippi v. EPA*, 744 F. 3d at 1344).

The court went on to reject arguments that the EPA should have adopted a more stringent

[7] This rulemaking concludes the reconsideration process. Under CAA section 109, the EPA is required to base its review of the NAAQS on the current air quality criteria, and thus the record and decision for this review also serve for the reconsideration.

This document is a prepublication version, signed by EPA Administrator, Gina McCarthy on 10/1/2015. We have taken steps to ensure the accuracy of this version, but it is not the official version.

primary standard. Dismissing arguments that a clinical study (as properly interpreted by the EPA) showing effects at 0.06 ppm necessitated a standard level lower than that selected, the court noted that this was a single, limited study (*Mississippi v. EPA*, 744 F. 3d at 1350). With respect to the epidemiologic evidence, the court accepted the EPA's argument that there could be legitimate uncertainty that a causal relationship between O_3 and 8-hour exposures less than 0.075 ppm exists, so that associations at lower levels reported in epidemiologic studies did not necessitate a more stringent standard (*Mississippi v. EPA*, 744 F. 3d at 1351-52).[8]

The court also rejected arguments that an 8-hour primary standard of 0.075 ppm failed to provide an adequate margin of safety, noting that margin of safety considerations involved policy judgments by the agency, and that by setting a standard "appreciably below" the level of the current standard (0.08 ppm), the agency had made a reasonable policy choice (*Mississippi v. EPA*, 744 F. 3d at 1351-52). Finally, the court rejected arguments that the EPA's decision was inconsistent with the CASAC's scientific recommendations because the CASAC had been insufficiently clear in its recommendations whether it was providing scientific or policy recommendations, and the EPA had reasonably addressed the CASAC's policy recommendations (*Mississippi v. EPA*, 744 F. 3d at 1357-58).

With respect to the secondary standard, the court held that the EPA's justification for setting the secondary standard identical to the revised 8-hour primary standard violated the CAA because the EPA had not adequately explained how that standard provided the required public

[8] The court cautioned, however, that "perhaps more [clinical] studies like the Adams studies will yet reveal that the 0.060 ppm level produces significant adverse decrements that simply cannot be attributed to normal variation in lung function," and further cautioned that "agencies may not merely recite the terms 'substantial uncertainty' as a justification for their actions." *Id.* at 1350, 1357 (internal citations omitted).

This document is a prepublication version, signed by EPA Administrator, Gina McCarthy on 10/1/2015. We have taken steps to ensure the accuracy of this version, but it is not the official version.

welfare protection. The court thus remanded the secondary standard to the EPA (*Mississippi v. EPA*, 744 F. 3d at 1360-62).

At the time of the court's decision, the EPA had already completed significant portions of its next statutorily required periodic review of the O_3 NAAQS. This review was formally initiated in 2008 with a call for information in the *Federal Register* (73 FR 56581, Sept. 29, 2008). On October 28-29, 2008, the EPA held a public workshop to discuss the policy-relevant science, which informed identification of key policy issues and questions to frame the review. Based in part on the workshop discussions, the EPA developed a draft Integrated Review Plan (IRP) outlining the schedule, process,[9] and key policy-relevant questions that would guide the evaluation of the air quality criteria for O_3 and the review of the primary and secondary O_3 NAAQS. A draft of the IRP was released for public review and comment in September 2009 and was the subject of a consultation with the CASAC on November 13, 2009 (74 FR 54562; October 22, 2009).[10] After considering the comments received from that consultation and from the public, the EPA completed and released the IRP for the review in 2011 (U.S. EPA, 2011a).

In preparing the first draft ISA, the EPA's National Center for Environmental Assessment (NCEA) considered CASAC and public comments on the IRP, and also comments received from a workshop held on August 6, 2010, to review and discuss preliminary drafts of key ISA sections (75 FR 42085, July 20, 2010). In 2011, the first draft ISA was released for public comment and for review by CASAC at a public meeting on May 19-20, 2011 (U.S. EPA,

[9] As of this review, the document developed in NAAQS reviews to document the air quality criteria, previously the AQCD, is the ISA, and the document describing the OAQPS staff evaluation, previously the Staff Paper, is the PA. These documents are described in the IRP.
[10] See http://yosemite.epa.gov/sab/sabproduct.nsf/WebProjectsbyTopicCASAC!OpenView for more information on CASAC activities related to the current O_3 NAAQS review.

This document is a prepublication version, signed by EPA Administrator, Gina McCarthy on 10/1/2015. We have taken steps to ensure the accuracy of this version, but it is not the official version.

2011b; 76 FR 10893, February 28, 2011; 76 FR 23809, April 28, 2011). Based on CASAC and public comments, NCEA prepared a second draft ISA, which was released for public comment and CASAC review (U.S. EPA, 2011c; 76 FR 60820, September 30, 2011). The CASAC reviewed this draft at a January 9-10, 2012, public meeting (76 FR 236, December 8, 2011). Based on CASAC and public comments, NCEA prepared a third draft ISA (U.S. EPA, 2012; 77 FR 36534, June 19, 2012), which was reviewed at a CASAC meeting in September 2012. The EPA released the final ISA in February 2013 (U.S. EPA, 2013).

The EPA presented its plans for conducting Risk and Exposure Assessments (REAs) for health risk and exposure (HREA) and welfare risk and exposure (WREA) in two documents that outlined the scope and approaches for use in conducting quantitative assessments, as well as key issues to be addressed as part of the assessments (U.S. EPA, 2011d, e). The EPA released these documents for public comment in April 2011, and consulted with CASAC on May 19-20, 2011 (76 FR 23809, April 28, 2011). The EPA considered CASAC advice and public comments in further planning for the assessments, issuing a memo that described changes to elements of the REA plans and brief explanations regarding them (Samet, 2011; Wegman, 2012).

In July 2012, the EPA made the first drafts of the Health and Welfare REAs available for CASAC review and public comment (77 FR 42495, July 19, 2012; 77 FR 51798, August 27, 2012). The first draft PA was made available for CASAC review and public comment in August

This document is a prepublication version, signed by EPA Administrator, Gina McCarthy on 10/1/2015. We have taken steps to ensure the accuracy of this version, but it is not the official version.

2012 (77 FR 42495, July 19, 2012; 77 FR 51798, August 27, 2012).[11] The first draft REAs and PA were the focus of a CASAC public meeting in September 2012 (Frey and Samet, 2012a, 2012b). The second draft REAs and PA, prepared with consideration of CASAC advice and public comments, were made available for public comment and CASAC review in January 2014 (79 FR 4694, January 29, 2014). These documents were the focus of a CASAC public meeting on March 25-27, 2014 (Frey, 2014a; Frey, 2014b; Frey, 2014c). The final versions of these documents were developed with consideration of the comments and recommendations from CASAC, as well as comments from the public on the draft documents, and were released in August 2014 (U.S. EPA 2014a; U.S. EPA, 2014b; U.S. EPA, 2014c).

The proposed decision (henceforth "proposal") on this review of the O_3 NAAQS was signed on November 25, 2014, and published in the *Federal Register* on December 17, 2014. The EPA held three public hearings to provide direct opportunity for oral testimony by the public on the proposal. The hearings were held on January 29, 2015, in Arlington, Texas, and Washington, DC, and on February 2, 2015, in Sacramento, California. At these public hearings, the EPA heard testimony from nearly 500 individuals representing themselves or specific interested organizations. Transcripts from these hearings and written testimony provided at the hearings are in the docket for this review. Additionally, approximately 430,000 written comments were received from various commenters during the public comment period on the

[11] The PA is prepared by the OAQPS staff. Formerly known as the Staff Paper, it presents a staff evaluation of the policy implications of the key scientific and technical information in the ISA and REAs for the EPA's consideration. The PA provides a transparent evaluation, and staff conclusions, regarding policy considerations related to reaching judgments about the adequacy of the current standards, and if revision is considered, what revisions may be appropriate to consider. The PA is intended to help "bridge the gap" between the agency's scientific assessments presented in the ISA and REAs, and the judgments required of the EPA Administrator in determining whether it is appropriate to retain or revise the NAAQS.

This document is a prepublication version, signed by EPA Administrator, Gina McCarthy on 10/1/2015. We have taken steps to ensure the accuracy of this version, but it is not the official version.

proposal, approximately 428,000 as part of mass mail campaigns. Significant issues raised in the public comments are discussed in the preamble of this final action. A summary of all other significant comments, along with the EPA's responses, can be found in a separate document (henceforth "Response to Comments") in the docket for this review.

The schedule for completion of this review is governed by a court order resolving a lawsuit filed in January 2014 by a group of plaintiffs who alleged that the EPA had failed to perform its mandatory duty, under section 109(d)(1), to complete a review of the O_3 NAAQS within the period provided by statute. The court order that governs this review, entered by the court on April 30, 2014, provides that the EPA will sign for publication a notice of final rulemaking concerning its review of the O_3 NAAQS no later than October 1, 2015.

As in prior NAAQS reviews, the EPA is basing its decision in this review on studies and related information included in the ISA, REAs and PA, which have undergone CASAC and public review. The studies assessed in the ISA and PA, and the integration of the scientific evidence presented in them, have undergone extensive critical review by the EPA, the CASAC, and the public. The rigor of that review makes these studies, and their integrative assessment, the most reliable source of scientific information on which to base decisions on the NAAQS, decisions that all parties recognize as of great import. NAAQS decisions can have profound impacts on public health and welfare, and NAAQS decisions should be based on studies that have been rigorously assessed in an integrative manner not only by the EPA but also by the statutorily mandated independent advisory committee, as well as the public review that accompanies this process. Some commenters have referred to and discussed individual scientific studies on the health and welfare effects of O_3 that were not included in the ISA (USEPA, 2013) ("'new' studies"). In considering and responding to comments for which such "new" studies were

This document is a prepublication version, signed by EPA Administrator, Gina McCarthy on 10/1/2015. We have taken steps to ensure the accuracy of this version, but it is not the official version.

cited in support, the EPA has provisionally considered the cited studies in the context of the findings of the ISA. The EPA's provisional consideration of these studies did not and could not provide the kind of in-depth critical review described above.

The decision to rely on studies and related information included in the ISA, REAs and PA, which have undergone CASAC and public review, is consistent with the EPA's practice in prior NAAQS reviews and its interpretation of the requirements of the CAA. Since the 1970 amendments, the EPA has taken the view that NAAQS decisions are to be based on scientific studies and related information that have been assessed as a part of the pertinent air quality criteria, and the EPA has consistently followed this approach. This longstanding interpretation was strengthened by new legislative requirements enacted in 1977, which added section 109(d)(2) of the Act concerning CASAC review of air quality criteria. See 71 FR 61144, 61148 (October 17, 2006) (final decision on review of NAAQS for particulate matter) for a detailed discussion of this issue and the EPA's past practice.

As discussed in the EPA's 1993 decision not to revise the NAAQS for O_3, ''new'' studies may sometimes be of such significance that it is appropriate to delay a decision on revision of a NAAQS and to supplement the pertinent air quality criteria so the studies can be taken into account (58 FR at 13013–13014, March 9, 1993). In the present case, the EPA's provisional consideration of ''new'' studies concludes that, taken in context, the ''new'' information and findings do not materially change any of the broad scientific conclusions regarding the health and welfare effects and exposure pathways of ambient O_3 made in the air quality criteria. For this reason, reopening the air quality criteria review would not be warranted even if there were time to do so under the court order governing the schedule for this rulemaking.

Accordingly, the EPA is basing the final decisions in this review on the studies and

This document is a prepublication version, signed by EPA Administrator, Gina McCarthy on 10/1/2015. We have taken steps to ensure the accuracy of this version, but it is not the official version.

related information included in the O_3 air quality criteria that have undergone CASAC and public review. The EPA will consider the "new" studies for purposes of decision making in the next periodic review of the O_3 NAAQS, which the EPA expects to begin soon after the conclusion of this review and which will provide the opportunity to fully assess these studies through a more rigorous review process involving the EPA, CASAC, and the public. Further discussion of these ''new'' studies can be found in the Response to Comments document, which is in the docket for this rulemaking and also available on the web (http://www.epa.gov/ttn/naaqs/standards/ozone/s_o3_index.html).

D. Ozone Air Quality

Ozone is formed near the earth's surface due to chemical interactions involving solar radiation and precursor pollutants including volatile organic compounds (VOCs) and NO_X. Over longer time periods, methane (CH_4) and carbon monoxide (CO) can also lead to O_3 formation at the global scale. The precursor emissions leading to O_3 formation can result from both man-made sources (e.g., motor vehicles and electric power generation) and natural sources (e.g., vegetation and wildfires). Occasionally, O_3 that is created naturally in the stratosphere can also contribute to O_3 levels near the surface. Once formed, O_3 near the surface can be transported by winds before eventually being removed from the atmosphere via chemical reactions or deposition to surfaces. In sum, O_3 concentrations are influenced by complex interactions between precursor emissions, meteorological conditions, and surface characteristics (U.S. EPA, 2014a).

In order to continuously assess O_3 air pollution levels, state and local environmental agencies operate O_3 monitors at various locations and subsequently submit the data to the EPA. At present, there are approximately 1,400 monitors across the U.S. reporting hourly O_3 averages during the times of the year when local O_3 pollution can be important (U.S. EPA, 2014c, Section

This document is a prepublication version, signed by EPA Administrator, Gina McCarthy on 10/1/2015. We have taken steps to ensure the accuracy of this version, but it is not the official version.

2.1). Much of this monitoring is focused on urban areas where precursor emissions tend to be largest, as well as locations directly downwind of these areas, but there are also over 100 sites in rural areas where high levels of O_3 can also be measured. Based on data from this national network, the EPA estimates that, in 2013, approximately 99 million Americans lived in counties where O_3 design values[12] were above the level of the existing health-based (primary) NAAQS of 0.075 ppm. High O_3 values can occur almost anywhere within the contiguous 48 states, although the poorest O_3 air quality in the U.S. is typically observed in California, Texas, and the Northeast Corridor, locations with some of the most densely populated areas in the country. From a temporal perspective, the highest daily peak O_3 concentrations generally tend to occur during the afternoon within the warmer months due to higher solar radiation and other conducive meteorological conditions during these times. The exceptions to this general rule include 1) some rural sites where transport of O_3 from upwind areas of regional production can occasionally result in high nighttime levels of O_3, 2) high-elevation sites episodically influenced by stratospheric intrusions which can occur in other months, and 3) certain locations in the western U.S. where large quantities of O_3 precursors emissions associated with oil and gas development can be trapped by strong inversions associated with snow cover during the colder months and efficiently converted to O_3 (U.S. EPA, 2014c, Section 2.3).

One of the challenging aspects of developing plans to address high O_3 concentrations is that the response of O_3 to precursor reductions is nonlinear. In particular, NO_X emissions can lead to both increases and decreases of O_3. The net impact of NO_X emissions on O_3 concentrations depends on the local quantities of NO_X, VOC, and sunlight which interact in a set

[12] A design value is a statistic that describes the air quality status of a given location relative to the level of the NAAQS.

This document is a prepublication version, signed by EPA Administrator, Gina McCarthy on 10/1/2015. We have taken steps to ensure the accuracy of this version, but it is not the official version.

of complex chemical reactions. In some areas, such as certain urban centers where NO_X emissions typically are high compared to local VOC emissions, NO_X can suppress O_3 locally. This phenomenon is particularly pronounced under conditions associated with low O_3 concentrations (i.e., during cool, cloudy weather and at night when photochemical activity is limited or nonexistent). However, while NO_X emissions can initially suppress O_3 levels near the emission sources, these same NO_X emissions ultimately react to form higher O_3 levels downwind when conditions are favorable. Photochemical model simulations suggest that, in general, reductions in NO_X emissions in the U.S. will slightly increase O_3 concentrations on days with lower O_3 concentrations in close proximity to NO_X sources (e.g., in urban core areas), while at the same time decreasing the highest O_3 concentrations in downwind areas. See generally, U.S. EPA, 2014a (section 2.2.1).

At present, both the primary and secondary NAAQS use the annual fourth-highest daily maximum 8-hour concentration, averaged over 3 years, as the form of the standard. An additional metric, the W126 exposure index, is often used to assess impacts of O_3 exposure on ecosystems and vegetation. W126 is a cumulative seasonal aggregate of weighted hourly O_3 values observed between 8 a.m. and 8 p.m. As O_3 precursor emissions have decreased across the U.S., annual fourth-highest 8-hour O_3 maxima have concurrently shown a modest downward trend. The national average change in annual fourth-highest daily maximum 8-hour O_3 concentrations between 2000 and 2013 was an 18% decrease. The national average change in the annual W126 exposure index over the same period was a 52% decrease. Air quality model simulations estimate that O_3 air quality will continue to improve over the next decade as additional reductions in O_3 precursors from power plants, motor vehicles, and other sources are realized.

This document is a prepublication version, signed by EPA Administrator, Gina McCarthy on 10/1/2015. We have taken steps to ensure the accuracy of this version, but it is not the official version.

In addition to being affected by changing emissions, future O_3 concentrations may also be affected by climate change. Modeling studies in the EPA's Interim Assessment (U.S. EPA, 2009a) that are cited in support of the 2009 Endangerment Finding under CAA section 202(a) (74 FR 66496, Dec. 15, 2009) as well as a recent assessment of potential climate change impacts (Fann et al., 2015) project that climate change may lead to future increases in summer O_3 concentrations across the contiguous U.S.[13] While the projected impact is not uniform, climate change has the potential to increase average summertime O_3 concentrations by as much as 1-5 ppb by 2030, if greenhouse gas emissions are not mitigated. Increases in temperature are expected to be the principal factor in driving any O_3 increases, although increases in stagnation frequency may also contribute (Jacob and Winner, 2009). If unchecked, climate change has the potential to offset some of the improvements in O_3 air quality, and therefore some of the improvements in public health, that are expected from reductions in emissions of O_3 precursors.

Another challenging aspect of this air quality issue is the impact from sources of O_3 and its precursors beyond those from domestic, anthropogenic sources. Modeling analyses indicate that nationally the majority of O_3 exceedances are predominantly caused by anthropogenic emissions from within the U.S. However, observational and modeling analyses have concluded that O_3 concentrations in some locations in the U.S. on some days can be substantially influenced by sources that cannot be addressed by domestic control measures. In particular, certain high-elevation sites in the western U.S. are impacted by a combination of non-U.S. sources like

[13] These modeling studies are based on coupled global climate and regional air quality models and are designed to assess the sensitivity of U.S. air quality to climate change. A wide range of future climate scenarios and future years have been modeled and there can be variations in the expected response in U.S. O_3 by scenario and across models and years, within the overall signal of higher summer O_3 concentrations in a warmer climate.

This document is a prepublication version, signed by EPA Administrator, Gina McCarthy on 10/1/2015. We have taken steps to ensure the accuracy of this version, but it is not the official version.

international transport, or natural sources such as stratospheric O_3, and O_3 originating from wildfire emissions.[14] Ambient O_3 from these non-U.S. and natural sources is collectively referred to as background O_3. See generally section 2.4 of the PA (U.S. EPA, 2014c). The analyses suggest that, at these locations, there can be episodic events with substantial background contributions where O_3 concentrations approach or exceed the level of the current NAAQS (i.e., 75 ppb). These events are relatively infrequent, and the EPA has policies that allow for the exclusion of air quality monitoring data from design value calculations when they are substantially affected by certain background influences.

E. Summary of Proposed Revisions to the O_3 Standards

For reasons discussed in the proposal, the Administrator proposed to revise the current primary and secondary standards for O_3. With regard to the primary standard, the Administrator proposed to revise the level from 75 ppb to a level within a range from 65 to 70 ppb. The EPA proposed to revise the AQI for O_3, consistent with revision to the primary standard.

With regard to the secondary standard, the Administrator proposed to revise the level of the current secondary standard to within the range of 0.065 to 0.070 ppm, which air quality analyses indicate would provide cumulative, seasonal air quality or exposure values, in terms of 3-year average W126 index values, at or below a range of 13-17 ppm-hours.

The EPA also proposed to make corresponding revisions in data handling conventions for O_3; to revise regulations for the PSD permitting program to add a provision grandfathering certain pending permits from certain requirements with respect to the proposed revisions to the

[14] Without global greenhouse gas mitigation efforts, climate change is projected to dramatically increase the area burned by wildfires across most of the contiguous U.S., especially in the West (U.S. EPA, 2015 p. 72).

This document is a prepublication version, signed by EPA Administrator, Gina McCarthy on 10/1/2015. We have taken steps to ensure the accuracy of this version, but it is not the official version.

standards; and to convey schedules and information related to implementing any revised standards. In conjunction with proposing exceptional event schedules related to implementing any revised O_3 standards, the EPA also proposed to extend the new schedule approach to other future NAAQS revisions and to remove obsolete regulatory language associated with expired exceptional event deadlines for historical standards for both O_3 and other pollutants for which NAAQS have been established. The EPA also proposed to make minor changes to the procedures and time periods for evaluating potential FRMs and equivalent methods, including making the requirements for NO_2 consistent with the requirements for O_3, and removing an obsolete requirement for the annual submission of documentation by manufacturers of certain particulate matter monitors.

F. Organization and Approach to Decisions in this O_3 NAAQS Review

This action presents the Administrator's final decisions in the current review of the primary and secondary O_3 standards. The final decisions addressing standards for O_3 are based on a thorough review in the ISA of scientific information on known and potential human health and welfare effects associated with exposure to O_3 at levels typically found in the ambient air. These final decisions also take into account the following: (1) staff assessments in the PA of the most policy-relevant information in the ISA as well as a quantitative health and welfare exposure and risk assessments based on that information; (2) CASAC advice and recommendations, as reflected in its letters to the Administrator and its discussions of drafts of the ISA, REAs, and PA at public meetings; (3) public comments received during the development of these documents, both in connection with CASAC meetings and separately; and (4) extensive public comments received on the proposed rulemaking.

The primary standard is addressed in section II. Corresponding changes to the AQI are

This document is a prepublication version, signed by EPA Administrator, Gina McCarthy on 10/1/2015. We have taken steps to ensure the accuracy of this version, but it is not the official version.

addressed in section III. The secondary standard is addressed in section IV. Related data handling conventions and exceptional events are addressed in section V. Updates to the monitoring regulations are addressed in section VI. Implementation activities, including PSD-related actions, are addressed in sections VII and VIII. Section IX addresses applicable statutory and executive order reviews.

II. Rationale for Decision on the Primary Standard

This section presents the Administrator's final decisions regarding the need to revise the existing primary O_3 standard and the appropriate revision to the level of that standard. Based on her consideration of the full body of health effects evidence and exposure/risk analyses, the Administrator concludes that the current primary standard for O_3 is not requisite to protect public health with an adequate margin of safety. In order to increase public health protection, she is revising the level of the primary standard to 70 ppb, in conjunction with retaining the current indicator, averaging time and form. The Administrator concludes that such a revised standard will be requisite to protect public health with an adequate margin of safety. As discussed more fully below, the rationale for these final decisions draws from the thorough review in the ISA (U.S. EPA, 2013) of the available scientific evidence, generally published through July 2011, on human health effects associated with the presence of O_3 in the ambient air. This rationale also takes into account: (1) analyses of O_3 air quality, human exposures to O_3, and O_3-associated health risks, as presented and assessed in the HREA (U.S. EPA, 2014a); (2) the EPA staff assessment of the most policy-relevant scientific evidence and exposure/risk information in the PA (U.S. EPA, 2014c); (3) CASAC advice and recommendations, as reflected in discussions of drafts of the ISA, REA, and PA at public meetings, in separate written comments, and in CASAC's letters to the Administrator; (4) public input received during the development of these

This document is a prepublication version, signed by EPA Administrator, Gina McCarthy on 10/1/2015. We have taken steps to ensure the accuracy of this version, but it is not the official version.

documents, either in connection with CASAC meetings or separately; and (5) public comments on the proposal notice.

Section II.A below summarizes the information presented in the proposal regarding O_3-associated health effects, O_3 exposures, and O_3-attributable health risks. Section II.B presents information related to the adequacy of the current primary O_3 standard, including a summary of the basis for the Administrator's proposed decision to revise the current standard, public comments received on the adequacy of the current standard, and the Administrator's final conclusions regarding the adequacy of the current standard. Section II.C presents information related to the elements of a revised primary O_3 standard, including information related to each of the major elements of the standard (i.e., indicator, averaging time, form, level). Section II.D summarizes the Administrator's final decisions on the primary O_3 standard.

A. Introduction

As discussed in section II.A of the proposal (79 FR 75243-75246, December 17, 2014), the EPA's approach to informing decisions on the primary O_3 standard in the current review builds upon the general approaches used in previous reviews and reflects the broader body of scientific evidence, updated exposure/risk information, and advances in O_3 air quality modeling now available. This approach is based most fundamentally on using the EPA's assessment of the available scientific evidence and associated quantitative analyses to inform the Administrator's judgments regarding a primary standard for O_3 that is "requisite" (i.e., neither more nor less stringent than necessary) to protect public health with an adequate margin of safety. Specifically, it is based on consideration of the available body of scientific evidence assessed in the ISA (U.S. EPA, 2013), exposure and risk analyses presented in the HREA (U.S. EPA, 2014a), evidence- and exposure-/risk-based considerations and conclusions presented in the PA (U.S. EPA, 2014c),

This document is a prepublication version, signed by EPA Administrator, Gina McCarthy on 10/1/2015. We have taken steps to ensure the accuracy of this version, but it is not the official version.

advice and recommendations received from CASAC (Frey, 2014a, c), and public comments.

Section II.A.1 below summarizes the information presented in the proposal regarding O_3-associated health effects. Section II.A.2 summarizes the information presented in the proposal regarding O_3 exposures and O_3-attributable health risks.

1. Overview of Health Effects Evidence

The health effects of O_3 are described in detail in the ISA (U.S. EPA, 2013). Based on its assessment of the health effects evidence, the ISA determined that a "causal" relationship exists between short-term exposure to O_3 in ambient air and effects on the respiratory system[15] and that a "likely to be causal" relationship exists between long-term exposure to O_3 in ambient air and respiratory effects[16] (U.S. EPA, 2013, pp. 1-6 to 1-7). The ISA summarizes the longstanding body of evidence for O_3 respiratory effects as follows (U.S. EPA, 2013, p. 1-5):

> The clearest evidence for health effects associated with exposure to O_3 is provided by studies of respiratory effects. Collectively, a very large amount of evidence spanning several decades supports a relationship between exposure to O_3 and a broad range of respiratory effects (see Section 6.2.9 and Section 7.2.8). The majority of this evidence is derived from studies investigating short-term exposures (i.e., hours to weeks) to O_3, although animal toxicological studies and recent epidemiologic evidence demonstrate that long-term exposure (i.e., months to years) may also harm the respiratory system.

Additionally, the ISA determined that the relationships between short-term exposures to O_3 in ambient air and both total mortality and cardiovascular effects are likely to be causal, based on expanded evidence bases in the current review (U.S. EPA, 2013, pp. 1-7 to 1-8). The ISA

[15] In determining that a causal relationship exists for O_3 with specific health effects, the EPA has concluded that "[e]vidence is sufficient to conclude that there is a causal relationship with relevant pollutant exposures" (U.S. EPA, 2013, p. lxiv).

[16] In determining a "likely to be a causal" relationship exists for O_3 with specific health effects, the EPA has concluded that "[e]vidence is sufficient to conclude that a causal relationship is likely to exist with relevant pollutant exposures, but important uncertainties remain" (U.S. EPA, 2013, p. lxiv).

This document is a prepublication version, signed by EPA Administrator, Gina McCarthy on 10/1/2015. We have taken steps to ensure the accuracy of this version, but it is not the official version.

determined that the currently available evidence for additional endpoints is "suggestive" of causal relationships with short-term (central nervous system effects) and long-term exposures (cardiovascular effects, reproductive and developmental effects, central nervous system effects and total mortality) to ambient O_3.

Consistent with emphasis in past reviews on O_3 health effects for which the evidence is strongest, in this review the EPA places the greatest emphasis on studies of health effects that have been determined in the ISA to be caused by, or likely to be caused by, O_3 exposures (U.S. EPA, 2013, section 2.5.2). This preamble section summarizes the evidence for health effects attributable to O_3 exposures, with a focus on respiratory morbidity and mortality effects attributable to short- and long-term exposures, and cardiovascular system effects (including mortality) and total mortality attributable to short-term exposures (from section II.B in the proposal, 79 FR 75246-75271).

The information highlighted here is based on the assessment of the evidence in the ISA (U.S. EPA, 2013, Chapters 4 to 8) and consideration of that evidence in the PA (U.S. EPA, 2014c, Chapters 3 and 4) on the known or potential effects on public health which may be expected from the presence of O_3 in the ambient air. This section summarizes: (1) information available on potential mechanisms for health effects associated with exposure to O_3 (II.A.1.a); (2) the nature of effects that have been associated directly with both short- and long-term exposure to O_3 and indirectly with the presence of O_3 in ambient air (II.A.1.b); (3) considerations related to the adversity of O_3-attributable health effects (II.A.1.c); and (4) considerations in characterizing the public health impact of O_3, including the identification of "at risk" populations (II.A.1.d).

a. Overview of Mechanisms

This document is a prepublication version, signed by EPA Administrator, Gina McCarthy on 10/1/2015. We have taken steps to ensure the accuracy of this version, but it is not the official version.

This section briefly summarizes the characterization of the key events and pathways that contribute to health effects resulting from O_3 exposures, as discussed in the proposal (79 FR 75247, section II.B.1) and in the ISA (U.S. EPA, 2013, section 5.3).

Experimental evidence elucidating modes of action and/or mechanisms contributes to our understanding of the biological plausibility of adverse O_3-related health effects, including respiratory effects and effects outside the respiratory system (U.S. EPA, 2013, Chapters 6 and 7). Evidence indicates that the initial key event is the formation of secondary oxidation products in the respiratory tract (U.S. EPA, 2013, section 5.3). This mainly involves direct reactions with components of the extracellular lining fluid (ELF). Although the ELF has inherent capacity to quench (based on individual antioxidant capacity), this capacity can be overwhelmed, especially with exposure to elevated concentrations of O_3 (U.S. EPA 2014c, at 3-3, 3-9). The resulting secondary oxidation products transmit signals to the epithelium, pain receptive nerve fibers and, if present, immune cells involved in allergic responses. The available evidence indicates that the effects of O_3 are mediated by components of ELF and by the multiple cell types in the respiratory tract. Oxidative stress is an implicit part of this initial key event.

Secondary oxidation products initiate numerous responses at the cellular, tissue, and whole organ level of the respiratory system. These responses include the activation of neural reflexes which leads to lung function decrements; initiation of pulmonary inflammation; alteration of barrier epithelial function; sensitization of bronchial smooth muscle; modification of lung host defenses; airways remodeling; and modulation of autonomic nervous function which may alter cardiac function (U.S. EPA, 2013, section 5.3, Figure 5-8).

Persistent inflammation and injury, which are observed in animal models of chronic and quasi-continuous exposure to O_3, are associated with airways remodeling (see section 7.2.3 of

This document is a prepublication version, signed by EPA Administrator, Gina McCarthy on 10/1/2015. We have taken steps to ensure the accuracy of this version, but it is not the official version.

the ISA, U.S. EPA, 2013). Chronic quasi-continuous exposure to O_3 has also been shown to result in effects on the developing lung and immune system. Systemic inflammation and vascular oxidative/nitrosative stress are also key events in the toxicity pathway of O_3 (U.S. EPA, 2013, section 5.3.8). Extrapulmonary effects of O_3 occur in numerous organ systems, including the cardiovascular, central nervous, reproductive, and hepatic systems (U.S. EPA, 2013, sections 6.3 to 6.5 and sections 7.3 to 7.5).

Responses to O_3 exposure are variable within the population. Studies have shown a large range of pulmonary function (i.e., spirometric) responses to O_3 among healthy young adults, while responses within an individual are relatively consistent over time. Other responses to O_3 have also been characterized by a large degree of interindividual variability, including airways inflammation. The mechanisms that may underlie the variability in responses seen among individuals are discussed in the ISA (U.S. EPA, 2013, section 5.4.2). Certain functional genetic polymorphisms, pre-existing conditions or diseases, nutritional status, lifestages, and co-exposures can contribute to altered risk of O_3-induced effects. Experimental evidence for such O_3-induced changes contributes to our understanding of the biological plausibility of adverse O_3-related health effects, including a range of respiratory effects as well as effects outside the respiratory system (e.g., cardiovascular effects) (U.S. EPA, 2013, Chapters 6 and 7).

b. Nature of Effects

This section briefly summarizes the information presented in the proposal on respiratory effects attributable to short-term exposures (II.A.1.b.i), respiratory effects attributable to long-term exposures (II.A.1.b.ii), cardiovascular effects attributable to short-term exposures (II.A.1.b.iii), and premature mortality attributable to short-term exposures (II.A.1.b.iv) (79 FR 75247, section II.B.2).

This document is a prepublication version, signed by EPA Administrator, Gina McCarthy on 10/1/2015. We have taken steps to ensure the accuracy of this version, but it is not the official version.

i. Respiratory Effects – Short-term Exposure

Controlled human exposure, animal toxicological, and epidemiologic studies available in the last review provided clear, consistent evidence of a causal relationship between short-term O_3 exposure and respiratory effects (U.S. EPA, 2006a). Recent studies evaluated since the completion of the 2006 AQCD support and expand upon the strong body of evidence available in the last review (U.S. EPA, 2013, section 6.2.9).

Key aspects of this evidence are discussed below with regard to (1) lung function decrements; (2) pulmonary inflammation, injury, and oxidative stress; (3) airway hyperresponsiveness; (4) respiratory symptoms and medication use; (5) lung host defense; (6) allergic and asthma-related responses; (7) hospital admissions and emergency department visits; and (8) respiratory mortality.[17]

Lung Function Decrements

Lung function decrements are typically measured by spirometry and refer to reductions in the maximal amount of air that can be forcefully exhaled. Forced expiratory volume in 1 second (FEV_1) is a common index used to assess the effect of O_3 on lung function. The ISA summarizes the currently available evidence from multiple controlled human exposure studies evaluating changes in FEV_1 following 6.6-hour O_3 exposures in young, healthy adults engaged in moderate levels of physical activity[18] (U.S. EPA, 2013, section 6.2.1.1, Figure 6-1). Exposures to an average O_3 concentration of 60 ppb results in group mean decrements in FEV_1 ranging from

[17] CASAC concurred that these were "the kinds of identifiable effects on public health that are expected from the presence of ozone in the ambient air" (Frey 2014c, p. 3).
[18] Table 6-1 of the ISA includes descriptions of the activity levels evaluated in controlled human exposure studies (U.S. EPA, 2013).

This document is a prepublication version, signed by EPA Administrator, Gina McCarthy on 10/1/2015. We have taken steps to ensure the accuracy of this version, but it is not the official version.

1.8% to 3.6% (Adams, 2002; Adams, 2006;[19] Schelegle et al., 2009;[20] Kim et al., 2011). The weighted average group mean decrement was 2.7% from these studies. In some analyses, these group mean decrements in lung function were statistically significant (Brown et al., 2008; Kim et al., 2011), while in other analyses they were not (Adams, 2006; Schelegle et al., 2009).[21] Prolonged exposure to an average O_3 concentration of 72 ppb results in a statistically significant group mean decrement in FEV_1 of about 6% (Schelegle et al., 2009).[22] There is a smooth dose-response curve without evidence of a threshold for exposures between 40 and 120 ppb O_3 (U.S. EPA, 2013, Figure 6-1). When these data are taken together, the ISA concludes that "mean FEV_1 is clearly decreased by 6.6-hour exposures to 60 ppb O_3 and higher concentrations in [healthy, young adult] subjects performing moderate exercise" (U.S. EPA, 2013, p. 6-9).

As described in the proposal (79 FR 75250), the ISA focuses on individuals with >10% decrements in FEV_1 because (1) it is accepted by the American Thoracic Society (ATS) as an abnormal response and a reasonable criterion for assessing exercise-induced bronchoconstriction, and (2) some individuals in the Schelegle et al. (2009) study experienced 5-10% FEV_1

---

[19] Adams (2006); (2002) both provide data for an additional group of 30 healthy subjects that were exposed via facemask to 60 ppb O_3 for 6.6 hours with moderate exercise. These subjects are described on page 133 of Adams (2006) and pages 747 and 761 of Adams (2002). The facemask exposure is not expected to affect the FEV_1 responses relative to a chamber exposure.
[20] For the 60 ppb target exposure concentration, Schelegle et al. (2009) reported that the actual mean exposure concentration was 63 ppb.
[21] Adams (2006) did not find effects on FEV_1 at 60 ppb to be statistically significant. In an analysis of the Adams (2006) data, Brown et al. (2008) addressed the more fundamental question of whether there were statistically significant differences in responses before and after the 6.6 hour exposure period and found the average effect on FEV_1 at 60 ppb to be small, but highly statistically significant using several common statistical tests, even after removal of potential outliers. Schelegle et al. (2009) reported that, compared to filtered air, the largest change in FEV_1 for the 60 ppb protocol occurred after the sixth (and final) exercise period.
[22] As noted above, for the 70 ppb exposure group, Schelegle et al. (2009) reported that the actual mean exposure concentration was 72 ppb.

This document is a prepublication version, signed by EPA Administrator, Gina McCarthy on 10/1/2015. We have taken steps to ensure the accuracy of this version, but it is not the official version.

decrements following exposure to filtered air. The proportion of healthy adults experiencing FEV_1 decrements > 10% following prolonged exposures to 80 ppb O_3 while at moderate exertion ranged from 17% to 29% and following exposures to 60 ppb O_3 ranged from 3% to 20%. The weighted average proportion (i.e., based on numbers of subjects in each study) of young, healthy adults with >10% FEV_1 decrements is 25% following exposure to 80 ppb O_3 and 10% following exposure to 60 ppb O_3, for 6.6 hours at moderate exertion (U.S. EPA, 2013, page 6-18 and 6-19).[23] Responses within an individual tend to be reproducible over a period of several months, reflecting differences in intrinsic responsiveness. Given this, the ISA concludes that "[t]hough group mean decrements are biologically small and generally do not attain statistical significance, a considerable fraction of exposed individuals [in the clinical studies] experience clinically meaningful decrements in lung function" when exposed for 6.6 hours to 60 ppb O_3 during quasi-continuous, moderate exertion (U.S. EPA, 2013, section 6.2.1.1, p. 6-20).

This review has marked an advance in the ability to make reliable quantitative predictions of the potential lung function response to O_3 exposure, and, thus, to reasonably predict the degree of interindividual response of lung function to that exposure. McDonnell et al. (2012) and Schelegle et al. (2012) developed models, described in more detail in the proposal (79 FR 75250), that included mathematical approaches to simulate the potential protective effect of antioxidants in the ELF at lower ambient O_3 concentrations, and that included a dose threshold below which changes in lung function do not occur. The resulting empirical models can estimate

[23] The ISA notes that by considering responses uncorrected for filtered air exposures, during which lung function typically improves (which would increase the size of the change, pre-and post-exposure), 10% is an underestimate of the proportion of healthy individuals that are likely to experience clinically meaningful changes in lung function following exposure for 6.6 hours to 60 ppb O_3 during quasi-continuous moderate exertion (U.S. EPA, 2012, section 6.2.1.1).

This document is a prepublication version, signed by EPA Administrator, Gina McCarthy on 10/1/2015. We have taken steps to ensure the accuracy of this version, but it is not the official version.

the frequency distribution of individual responses and summary measures of the distribution such as the mean or median response and the proportions of individuals with FEV_1 decrements > 10%, 15%, and 20%.[24] The predictions of the models are consistent with the observed results from the individual controlled human exposure studies of O_3-induced FEV_1 decrements (79 FR 75250-51, see also U.S. EPA, 2013, Figures 6-1 and 6-3). CASAC agreed that these models mark a significant technical advance over the exposure-response modeling approach used for the lung function risk assessment in the last review and explicitly found that "[t]he MSS model to be scientifically and biologically defensible" (Frey, 2014a, pp. 8, 2). CASAC also stated that "the comparison of the MSS model results to those obtained with the exposure-response model is of tremendous importance. Typically, the MSS model gives a result about a factor of three higher … for school-age children, which is expected because the MSS model includes responses for a wider range of exposure protocols" (Frey, 2014a, pp. 8, 2).

Epidemiologic studies have consistently linked short-term increases in ambient O_3 concentrations with lung function decrements in diverse populations and lifestages, including children attending summer camps, adults exercising or working outdoors, and groups with pre-existing respiratory diseases such as asthmatic children (U.S. EPA, 2013, section 6.2.1.2). Some of these studies reported O_3-associated lung function decrements accompanied by respiratory symptoms[25] in asthmatic children. In contrast, studies of children in the general population have reported similar O_3-associated lung function decrements but without accompanying respiratory symptoms (79 FR 75251; U.S. EPA, 2013, section 6.2.1.2). As noted in the PA (EPA, 2014c, pp.

[24] One of these models, the McDonnell-Stewart-Smith (MSS) model (McDonnell et al. 2012) was used to estimate the occurrences of lung function decrements in the HREA.
[25] Reversible loss of lung function in combination with the presence of symptoms meets ATS criteria for adversity (ATS, 2000a).

This document is a prepublication version, signed by EPA Administrator, Gina McCarthy on 10/1/2015. We have taken steps to ensure the accuracy of this version, but it is not the official version.

4-70 to 4-71), additional research is needed to evaluate responses of people with asthma and healthy people in the 40 to 70 ppb range. Further epidemiologic studies and meta-analyses of the effects of O_3 exposure on children will help elucidate the concentration-response functions for lung function and respiratory symptom effects at lower O_3 concentrations.

Several epidemiologic panel studies[26] reported statistically significant associations with lung function decrements at relatively low ambient O_3 concentrations. For outdoor recreation or exercise, associations were reported in analyses restricted to 1-hour average O_3 concentrations less than 80 ppb, down to less than 50 ppb. Among outdoor workers, Brauer et al. (1996) found a robust association with daily 1-hour max O_3 concentrations less than 40 ppb. Ulmer et al. (1997) found a robust association in schoolchildren with 30-minute maximum O_3 concentrations less than 60 ppb. For 8-hour average O_3 concentrations, associations with lung function decrements in children with asthma were found to persist at concentrations less than 80 ppb in a U.S. multicity study (Mortimer et al., 2002) and less than 51 ppb in a study conducted in the Netherlands (Gielen et al., 1997).

As described in the proposal (79 FR 75251), several epidemiologic panel studies provided information on potential confounding by copollutants and most O_3 effect estimates for lung function were robust to adjustment for temperature, humidity, and copollutants such as particulate matter with mass median aerodynamic diameter less than or equal to 2.5 micrometers ($PM_{2.5}$), particulate matter with mass median aerodynamic diameter less than or equal to 10 micrometers (PM_{10}), NO_2, or sulfur dioxide (SO_2) (Hoppe et al., 2003; Brunekreef et al., 1994; Hoek et al. 1993; U.S. EPA, 2013, pp. 6-67 to 6-69). Although examined in only a few

[26] Panel studies include repeated measurements of health outcomes, such as respiratory symptoms, at the individual level (U.S. EPA, 2013, p. 1x).

This document is a prepublication version, signed by EPA Administrator, Gina McCarthy on 10/1/2015. We have taken steps to ensure the accuracy of this version, but it is not the official version.

epidemiologic studies, O_3 also remained associated with decreases in lung function with adjustment for pollen or acid aerosols (79 F 75251; U.S. EPA, 2013, section 6.2.1.2).

Pulmonary Inflammation, Injury and Oxidative Stress

As described in detail in section II.B.2.a.ii of the proposal (79 FR 75252), O_3 exposures can result in increased respiratory tract inflammation and epithelial permeability. Inflammation is a host response to injury, and the induction of inflammation is evidence that injury has occurred. Oxidative stress has been shown to play a key role in initiating and sustaining O_3-induced inflammation. As noted in the ISA (U.S. EPA, 2013, section 6.2.3), O_3 exposures can initiate an acute inflammatory response throughout the respiratory tract that has been reported to persist for at least 18-24 hours after exposure.

Inflammation induced by exposure of humans to O_3 can have several potential outcomes, ranging from resolving entirely following a single exposure to becoming a chronic inflammatory state, as described in detail in section II.B.2.a.ii of the proposal (79 FR 75252) and in the ISA (U.S. EPA, 2013, section 6.2.3). Continued cellular damage due to chronic inflammation "may alter the structure and function of pulmonary tissues" (U.S. EPA, 2013, p. 6-161). Lung injury and the resulting inflammation provide a mechanism by which O_3 may cause other more serious morbidity effects (e.g., asthma exacerbations) (U.S. EPA, 2013, section 6.2.3).[27]

Building on the last review, recent studies continue to support the evidence for airway inflammation and injury with new evidence for such effects following exposures to lower concentrations than had been evaluated previously. These studies include recent controlled

[27] CASAC also addressed this issue: "The CASAC believes that these modest changes in FEV_1 are usually associated with inflammatory changes, such as more neutrophils in the bronchoalveolar lavage fluid. Such changes may be linked to the pathogenesis of chronic lung disease" (Frey, 2014a p. 2).

This document is a prepublication version, signed by EPA Administrator, Gina McCarthy on 10/1/2015. We have taken steps to ensure the accuracy of this version, but it is not the official version.

human exposure and epidemiologic studies and are discussed more below.

An extensive body of evidence from controlled human exposure studies, described in section II.B.2.a.ii of the proposal, indicates that short-term exposures to O_3 can cause pulmonary inflammation and increases in polymorphonuclear leukocyte (PMN) influx and permeability following 80-600 O_3 ppb exposures, eosinophilic inflammation following exposures at or above 160 ppb, and O_3-induced PMN influx following exposures of healthy adults to 60 ppb O_3, the lowest concentration that has been evaluated for inflammation. A meta-analysis of 21 controlled human exposure studies (Mudway and Kelly, 2004) using varied experimental protocols (80-600 ppb O_3 exposures; 1-6.6 hours exposure duration; light to heavy exercise; bronchoscopy at 0-24 hours post- O_3 exposure) reported that PMN influx in healthy subjects is linearly associated with total O_3 dose.

As with FEV_1 responses to O_3, inflammatory responses to O_3 are generally reproducible within individuals, with some individuals experiencing more severe O_3-induced airway inflammation than indicated by group averages. Unlike O_3-induced decrements in lung function, which are attenuated following repeated exposures over several days, some markers of O_3-induced inflammation and tissue damage remain elevated during repeated exposures, indicating ongoing damage to the respiratory system (79 FR 75252). Most controlled human exposure studies have reported that asthmatics experience larger O_3-induced inflammatory responses than non-asthmatics.[28]

[28] When evaluated, these studies have also reported O_3-induced respiratory symptoms in asthmatics. Specifically, Scannell et al. (1996), Basha et al. (1994), and Vagaggini et al. (2001, 2007) reported increased symptoms in addition to inflammation.

This document is a prepublication version, signed by EPA Administrator, Gina McCarthy on 10/1/2015. We have taken steps to ensure the accuracy of this version, but it is not the official version.

In the previous review (U.S. EPA, 2006a), the epidemiologic evidence of O_3-associated changes in airway inflammation and oxidative stress was limited (79 FR 75253). Since then, as a result of the development of less invasive test methods, there has been a large increase in the number of studies assessing ambient O_3-associated changes in airway inflammation and oxidative stress, the types of biological samples collected, and the types of indicators. Most of these recent studies have evaluated biomarkers of inflammation or oxidative stress in exhaled breath, nasal lavage fluid, or induced sputum (U.S. EPA, 2013, section 6.2.3.2). These recent studies form a larger database to establish coherence with findings from controlled human exposure and animal studies that have measured the same or related biological markers. Additionally, results from these studies provide further biological plausibility for the associations observed between ambient O_3 concentrations and respiratory symptoms and asthma exacerbations.

Airway Hyperresponsiveness (AHR)

A strong body of controlled human exposure and animal toxicological studies, most of which were available in the last review of the O_3 NAAQS, report O_3-induced AHR after either acute or repeated exposures (U.S. EPA, 2013, section 6.2.2.2). People with asthma often exhibit increased airway responsiveness at baseline relative to healthy control subjects, and asthmatics can experience further increases in responsiveness following exposures to O_3. Studies reporting increased airway responsiveness after O_3 exposure contribute to a plausible link between ambient O_3 exposures and increased respiratory symptoms in asthmatics, and increased hospital admissions and emergency department visits for asthma (section II.B.2.a.iii, 79 FR 75254; U.S. EPA, 2013, section 6.2.2.2).

Respiratory Symptoms and Medication Use

This document is a prepublication version, signed by EPA Administrator, Gina McCarthy on 10/1/2015. We have taken steps to ensure the accuracy of this version, but it is not the official version.

Respiratory symptoms are associated with adverse outcomes such as limitations in activity, and are the primary reason for people with asthma to use quick relief medication and to seek medical care. Studies evaluating the link between O_3 exposures and such symptoms allow a direct characterization of the clinical and public health significance of ambient O_3 exposure. Controlled human exposure and toxicological studies have described modes of action through which short-term O_3 exposures may increase respiratory symptoms by demonstrating O_3-induced AHR (U.S. EPA, 2013, section 6.2.2) and pulmonary inflammation (U.S. EPA, 2013, section 6.2.3).

The link between subjective respiratory symptoms and O_3 exposures has been evaluated in both controlled human exposure and epidemiologic studies, and the link with medication use has been evaluated in epidemiologic studies. In the last review, several controlled human exposure studies reported respiratory symptoms following exposures to O_3 concentrations at or above 80 ppb. In addition, one study reported such symptoms following exposures to 60 ppb O_3, though the increase was not statistically different from filtered air controls. Epidemiologic studies reported associations between ambient O_3 and respiratory symptoms and medication use in a variety of locations and populations, including asthmatic children living in U.S. cities (U.S. EPA, 2013, pp. 6-1 to 6-2). In the current review, additional controlled human exposure studies have evaluated respiratory symptoms following exposures to O_3 concentrations below 80 ppb and recent epidemiologic studies have evaluated associations with respiratory symptoms and medication use (U.S. EPA, 2013, sections 6.2.1, 6.2.4).

As noted in section II.B.2.a.iv in the proposal (79 FR 75255), the findings for O_3-induced respiratory symptoms in controlled human exposure studies, and the evidence integrated across disciplines describing underlying modes of action, provide biological plausibility for

This document is a prepublication version, signed by EPA Administrator, Gina McCarthy on 10/1/2015. We have taken steps to ensure the accuracy of this version, but it is not the official version.

epidemiologic associations observed between short-term increases in ambient O_3 concentration and increases in respiratory symptoms (U.S. EPA, 2013, section 6.2.4).

Most epidemiologic studies of O_3 and respiratory symptoms and medication use have been conducted in children and/or adults with asthma, with fewer studies, and less consistent results, in non-asthmatic populations (U.S. EPA, 2013, section 6.2.4). The 2006 AQCD (U.S. EPA, 2006a; U.S. EPA, 2013, section 6.2.4) concluded that the collective body of epidemiologic evidence indicated that short-term increases in ambient O_3 concentrations are associated with increases in respiratory symptoms in children with asthma. A large body of single-city and single-region studies of asthmatic children provides consistent evidence for associations between short-term increases in ambient O_3 concentrations and increased respiratory symptoms and asthma medication use in children with asthma (U.S. EPA, 2013, Figure 6-12, Table 6-20, section 6.2.4.1). Methodological differences, described in section II.B.2.a.iv of the proposal, among studies make comparisons across recent multicity studies of respiratory symptoms difficult.

Available evidence indicates that O_3-associated increases in respiratory symptoms are not confounded by temperature, pollen, or copollutants (primarily PM) (U.S. EPA, 2013, section 6.2.4.5; Table 6-25). However, identifying the independent effects of O_3 in some studies was complicated due to the high correlations observed between O_3 and PM or different lags and averaging times examined for copollutants. Nonetheless, the ISA noted that the robustness of associations in some studies of individuals with asthma, combined with findings from controlled human exposure studies for the direct effects of O_3 exposure, provide substantial evidence supporting the independent effects of short-term ambient O_3 exposure on respiratory symptoms (U.S. EPA, 2013, section 6.2.4.5).

This document is a prepublication version, signed by EPA Administrator, Gina McCarthy on 10/1/2015. We have taken steps to ensure the accuracy of this version, but it is not the official version.

In summary, both controlled human exposure and epidemiologic studies have reported respiratory symptoms attributable to short-term O_3 exposures. In the last review, the majority of the evidence from controlled human exposure studies in young, healthy adults was for symptoms following exposures to O_3 concentrations at or above 80 ppb. Although studies that have become available since the last review have not reported increased respiratory symptoms in young, healthy adults following exposures with moderate exertion to 60 ppb, one recent study did report increased symptoms following exposure to 72 ppb O_3. As was concluded in the last review, the collective body of epidemiologic evidence indicates that short-term increases in ambient O_3 concentration are associated with increases in respiratory symptoms in children with asthma (U.S. EPA, 2013, section 6.2.4). Recent studies of respiratory symptoms and medication use, primarily in asthmatic children, add to this evidence. In a smaller body of studies, increases in ambient O_3 concentration were associated with increases in respiratory symptoms in adults with asthma.

Lung Host Defense

The mammalian respiratory tract has a number of closely integrated defense mechanisms that, when functioning normally, provide protection from the potential health effects of exposures to a wide variety of inhaled particles and microbes. Based on toxicological and human exposure studies, in the last review EPA concluded that available evidence indicates that short-term O_3 exposures have the potential to impair host defenses in humans, primarily by interfering with alveolar macrophage function. Any impairment in alveolar macrophage function may lead to decreased clearance of microorganisms or nonviable particles. Compromised alveolar macrophage functions in asthmatics may increase their susceptibility to other O_3 effects, the effects of particles, and respiratory infections (U.S. EPA, 2006a).

This document is a prepublication version, signed by EPA Administrator, Gina McCarthy on 10/1/2015. We have taken steps to ensure the accuracy of this version, but it is not the official version.

Relatively few studies conducted since the last review have evaluated the effects of O_3 exposures on lung host defense. As presented in section II.B.2.a.v of the proposal (79 FR 75256), when the available evidence is taken as a whole, the ISA concludes that acute O_3 exposures impair the host defense capability of animals, primarily by depressing alveolar macrophage function and perhaps also by decreasing mucociliary clearance of inhaled particles and microorganisms. Coupled with limited evidence from controlled human exposure studies, this suggests that humans exposed to O_3 could be predisposed to bacterial infections in the lower respiratory tract.

Allergic and Asthma Related Responses

Evidence from controlled human exposure and epidemiologic studies available in the last review indicates that O_3 exposure skews immune responses toward an allergic phenotype and could also make airborne allergens more allergenic, as discussed in more detail in the proposal (79 FR 75257). Evidence from controlled human exposure and animal toxicology studies available in the last review indicates that O_3 may also increase AHR to specific allergen triggers (75 FR 2970, January 19, 2010). When combined with NO_2, O_3 has been shown to enhance nitration of common protein allergens, which may increase their allergenicity (Franze et al., 2005).

Hospital Admissions and Emergency Department Visits

The 2006 AQCD concluded that "the overall evidence supports a causal relationship between acute ambient O_3 exposures and increased respiratory morbidity resulting in increased

This document is a prepublication version, signed by EPA Administrator, Gina McCarthy on 10/1/2015. We have taken steps to ensure the accuracy of this version, but it is not the official version.

emergency department visits and [hospital admissions] during the warm season"[29] (U.S. EPA, 2006a). This conclusion was "strongly supported by the human clinical, animal toxicologic[al], and epidemiologic evidence for [O_3-induced] lung function decrements, increased respiratory symptoms, airway inflammation, and airway hyperreactivity" (U.S. EPA, 2006a).

The results of recent studies largely support the conclusions of the 2006 AQCD (U.S. EPA, 2013, section 6.2.7). Since the completion of the 2006 AQCD, relatively fewer studies, conducted in the U.S., Canada, and Europe, have evaluated associations between short-term O_3 concentrations and respiratory hospital admissions and emergency department visits, with a growing number of studies conducted in Asia. This epidemiologic evidence is discussed in detail in the proposal (79 FR 75258) and in the ISA (U.S. EPA, 2013, section 6.2.7).[30]

In considering this body of evidence, the ISA focused primarily on multicity studies because they examine associations with respiratory-related hospital admissions and emergency department visits over large geographic areas using consistent statistical methodologies (U.S. EPA, 2013, section 6.2.7.1). The ISA also focused on single-city studies that encompassed a large number of daily hospital admissions or emergency department visits, included long study-durations, were conducted in locations not represented by the larger studies, or examined population-specific characteristics that may impact the risk of O_3-related health effects but were not evaluated in the larger studies (U.S. EPA, 2013, section 6.2.7.1). When examining the

[29] Epidemiologic associations for O_3 are more robust during the warm season than during cooler months (e.g., smaller measurement error, less potential confounding by copollutants). The rationale for focusing on warm season epidemiologic studies for O_3 can be found at 72 FR 37838-37840.

[30] The consideration of ambient O_3 concentrations in the locations of these epidemiologic studies are discussed in sections II.D.1.b and II.E.4.a below, for the current standard and for alternative standards, respectively.

This document is a prepublication version, signed by EPA Administrator, Gina McCarthy on 10/1/2015. We have taken steps to ensure the accuracy of this version, but it is not the official version.

association between short-term O_3 exposure and respiratory health effects that require medical attention, the ISA distinguishes between hospital admissions and emergency department visits because it is likely that a small percentage of respiratory emergency department visits will be admitted to the hospital; therefore, respiratory emergency department visits may represent potentially less serious, but more common outcomes (U.S. EPA, 2013, section 6.2.7.1).

The collective evidence across studies indicates a mostly consistent positive association between O_3 exposure and respiratory-related hospital admissions and emergency department visits. Moreover, the magnitude of these associations may be underestimated to the extent members of study populations modify their behavior in response to air quality forecasts, and to the extent such behavior modification increases exposure misclassification (U.S. EPA, 2013, Section 4.6.6). Studies examining the potential confounding effects of copollutants have reported that O_3 effect estimates remained relatively robust upon the inclusion of PM and gaseous pollutants in two-pollutant models (U.S. EPA, 2013, Figure 6-20, Table 6-29). Additional studies that conducted copollutant analyses, but did not present quantitative results, also support these conclusions (Strickland et al., 2010; Tolbert et al., 2007; Medina-Ramon et al., 2006; U.S. EPA, 2013, section 6.2.7.5).[31]

In the last review, studies had not evaluated the concentration-response relationship between short-term O_3 exposure and respiratory-related hospital admissions and emergency department visits. As described in the proposal in section II.B.2.a.vii (79 FR 75257) and in the

[31] The ISA concluded that, "[o]verall, recent studies provide copollutant results that are consistent with those from the studies evaluated in the 2006 O_3 AQCD [(U.S. EPA, 2006[a]), Figure 7-12, page 7-80 of the 2006 O_3 AQCD], which found that O_3 respiratory hospital admissions risk estimates remained robust to the inclusion of PM in copollutant models (U.S. EPA, 2013, pp. 6-152 to 6-153).

This document is a prepublication version, signed by EPA Administrator, Gina McCarthy on 10/1/2015. We have taken steps to ensure the accuracy of this version, but it is not the official version.

ISA (U.S. EPA, 2013, section 6.2.7.2), a preliminary examination of this relationship in studies that have become available since the last review found no evidence of a deviation from linearity when examining the association between short-term O_3 exposure and asthma hospital admissions (Silverman and Ito, 2010; Strickland et al., 2010). In addition, an examination of the concentration-response relationship for O_3 exposure and pediatric asthma emergency department visits found no evidence of a threshold at O_3 concentrations as low as 30 ppb (for daily maximum 8-hour concentrations) (U.S. EPA, 2013, section 6.2.7.3). However, in these studies there is uncertainty in the shape of the concentration-response curve at the lower end of the distribution of O_3 concentrations due to the low density of data in this range. Further studies at low-level O_3 exposures might reduce this uncertainty.

Respiratory Mortality

Evidence from experimental studies indicates multiple potential pathways of respiratory effects from short-term O_3 exposures, which support the continuum of respiratory effects that could potentially result in respiratory-related mortality in adults (U.S. EPA, 2013, section 6.2.8).[32] The evidence in the last review was inconsistent for associations between short-term O_3 concentrations and respiratory mortality (U.S. EPA, 2006a). New epidemiologic evidence for respiratory mortality is discussed in detail in the ISA (U.S. EPA, 2013, section 6.6) and summarized below. The majority of recent multicity studies have reported positive associations between short-term O_3 exposures and respiratory mortality, particularly during the summer months (U.S. EPA, 2013, Figure 6-36).

Recent multicity studies from the U.S. (Zanobetti and Schwartz, 2008), Europe (Samoli

[32] Premature mortality is discussed in more detail below in section II.A.1.b.iv.

This document is a prepublication version, signed by EPA Administrator, Gina McCarthy on 10/1/2015. We have taken steps to ensure the accuracy of this version, but it is not the official version.

et al., 2009), Italy (Stafoggia et al., 2010), and Asia (Wong et al., 2010), as well as a multi-continent study (Katsouyanni et al., 2009), reported associations between short-term O_3 concentrations and respiratory mortality (U.S. EPA, 2013, Figure 6-37, page 6-259). With respect to respiratory mortality, summer-only analyses were consistently positive and most were statistically significant. All-year analyses had more mixed results, but most were positive.

Of the studies evaluated, only two studies analyzed the potential for copollutant confounding of the O_3-respiratory mortality relationship (Katsouyanni et al., (2009); Stafoggia et al., (2010)). Based on the results of these analyses, the O_3 respiratory mortality risk estimates appear to be moderately to substantially sensitive (e.g., increased or attenuated) to inclusion of PM_{10}. However, in the APHENA study (Katsouyanni et al., 2009), the mostly every-6th-day sampling schedule for PM_{10} in the Canadian and U.S. datasets greatly reduced their sample size and limits the interpretation of these results (U.S. EPA, 2013, sections 6.2.8 and 6.2.9).

The evidence for associations between short-term O_3 concentrations and respiratory mortality has been strengthened since the last review, with the addition of several large multicity studies. The biological plausibility of the associations reported in these studies is supported by the experimental evidence for respiratory effects.

ii. Respiratory Effects – Long-Term Exposure

Since the last review, the body of evidence indicating the occurrence of respiratory effects due to long-term O_3 exposure has been strengthened. This evidence is discussed in detail in the ISA (U.S. EPA, 2013, Chapter 7) and summarized below for new-onset asthma and asthma prevalence, asthma hospital admissions, pulmonary structure and function, and respiratory mortality.

Asthma is a heterogeneous disease with a high degree of temporal variability. The onset,

This document is a prepublication version, signed by EPA Administrator, Gina McCarthy on 10/1/2015. We have taken steps to ensure the accuracy of this version, but it is not the official version.

progression, and symptoms can vary within an individual's lifetime, and the course of asthma may vary markedly in young children, older children, adolescents, and adults. In the previous review, longitudinal cohort studies that examined associations between long-term O_3 exposures and the onset of asthma in adults and children indicated a direct effect of long-term O_3 exposures on asthma risk in adults and effect modification by O_3 in children. Since then, additional studies have evaluated associations with new onset asthma, further informing our understanding of the potential gene-environment interactions, mechanisms, and biological pathways associated with incident asthma.

In children, the relationship between long-term O_3 exposure and new-onset asthma has been extensively studied in the Children's Health Study (CHS), a long-term study that was initiated in the early 1990's which has evaluated effects in several cohorts of children. For this review, recent studies from the CHS provide evidence for gene-environment interactions in effects on new-onset asthma by indicating that the lower risks associated with specific genetic variants are found in children who live in lower O_3 communities. Described in detail in the proposal (79 FR 75259) and in the ISA (U.S. EPA, 2013, section 7.2.1), these studies indicate that the risk for new-onset asthma is related in part to genetic susceptibility, as well as behavioral factors and environmental exposure. Cross-sectional studies by Akinbami et al. (2010) and Hwang et al. (2005) provide further evidence relating O_3 exposures with asthma prevalence. Gene-environment interactions are discussed in detail in Section 5.4.2.1 in the ISA (U.S. EPA, 2013).

In the 2006 AQCD (U.S. EPA, 2006a), studies on O_3-related hospital discharges and emergency department visits for asthma and respiratory disease mainly looked at short-term (daily) metrics. Recent studies continue to indicate that there is evidence for increases in both

This document is a prepublication version, signed by EPA Administrator, Gina McCarthy on 10/1/2015. We have taken steps to ensure the accuracy of this version, but it is not the official version.

hospital admissions and emergency department visits in children and adults related to all respiratory outcomes, including asthma, with stronger associations in the warm months.

In the 2006 AQCD (U.S. EPA, 2006a), few epidemiologic studies had investigated the effect of chronic O_3 exposure on pulmonary function. As discussed in the proposal, epidemiologic studies of long-term exposures in both children and adults provide mixed results about the effects of long-term O_3 exposure on pulmonary function and the growth rate of lung function.

Long-term studies in animals allow for greater insight into the potential effects of prolonged exposure to O_3 that may not be easily measured in humans, such as structural changes in the respiratory tract. Despite uncertainties, epidemiologic studies observing associations of O_3 exposure with functional changes in humans can attain biological plausibility in conjunction with long-term toxicological studies, particularly O_3-inhalation studies performed in non-human primates whose respiratory systems most closely resemble that of the human. An important series of studies, discussed in section 7.2.3.2 of the ISA (U.S. EPA, 2013), have used nonhuman primates to examine the effect of O_3 alone, or in combination with an inhaled allergen, house dust mite antigen, on morphology and lung function. Animals exhibit the hallmarks of allergic asthma defined for humans (NHLBI, 2007). These studies and others have demonstrated changes in pulmonary function and airway morphology in adult and infant nonhuman primates repeatedly exposed to environmentally relevant concentrations of O_3 (U.S. EPA, 2013, section 7.2.3.2). As discussed in more detail in the proposal, the studies provide evidence of an O_3-induced change in airway resistance and responsiveness and provide biological plausibility of long-term exposure, or repeated short-term exposures, to O_3 contributing to the effects of asthma in children.

Collectively, evidence from animal studies strongly suggests that chronic O_3 exposure is

This document is a prepublication version, signed by EPA Administrator, Gina McCarthy on 10/1/2015. We have taken steps to ensure the accuracy of this version, but it is not the official version.

capable of damaging the distal airways and proximal alveoli, resulting in lung tissue remodeling and leading to apparent irreversible changes. Potentially, persistent inflammation and interstitial remodeling play an important role in the progression and development of chronic lung disease. Further discussion of the modes of action that lead to O_3-induced morphological changes and the mechanisms involved in lifestage susceptibility and developmental effects can be found in the ISA (U.S. EPA, 2013, section 5.3.7, section 5.4.2.4). The findings reported in chronic animal studies offer insight into potential biological mechanisms for the suggested association between seasonal O_3 exposure and reduced lung function development in children as observed in epidemiologic studies (U.S. EPA, 2013, section 7.2.3.1). Further research could help fill in the gaps in our understanding of the mechanisms involved in lifestage susceptibility and developmental effects in children of seasonal or long-term exposure to O_3.

A limited number of epidemiologic studies have assessed the relationship between long-term exposure to O_3 and mortality in adults. The 2006 AQCD concluded that an insufficient amount of evidence existed "to suggest a causal relationship between chronic O_3 exposure and increased risk for mortality in humans" (U.S. EPA, 2006a). Though total and cardio-pulmonary mortality were considered in these studies, respiratory mortality was not specifically considered.

In a recent follow-up analysis of the American Cancer Society cohort (Jerrett et al., 2009), cardiopulmonary deaths were separately subdivided into respiratory and cardiovascular deaths, rather than combined as in the Pope et al. (2002) work. Increased O_3 exposure was associated with the risk of death from respiratory causes, and this effect was robust to the inclusion of $PM_{2.5}$. Additionally, a recent multicity time series study (Zanobetti and Schwartz, 2011), which followed (from 1985 to 2006) four cohorts of Medicare enrollees with chronic conditions that might predispose to O_3-related effects, observed an association between long-

This document is a prepublication version, signed by EPA Administrator, Gina McCarthy on 10/1/2015. We have taken steps to ensure the accuracy of this version, but it is not the official version.

term (warm season) exposure to O_3 and elevated risk of mortality in the cohort that had previously experienced an emergency hospital admission due to chronic obstructive pulmonary disease (COPD). A key limitation of this study is the inability to control for $PM_{2.5}$, because data were not available in these cities until 1999.

iii. Cardiovascular Effects – Short-Term Exposure

A relatively small number of studies have examined the potential effect of short-term O_3 exposure on the cardiovascular system. The 2006 AQCD (U.S. EPA, 2006a, p. 8-77) concluded that "O_3 directly and/or indirectly contributes to cardiovascular-related morbidity," but added that the body of evidence was limited. This conclusion was based on a controlled human exposure study that included hypertensive adult males; a few epidemiologic studies of physiologic effects, heart rate variability, arrhythmias, myocardial infarctions, and hospital admissions; and toxicological studies of heart rate, heart rhythm, and blood pressure.

More recently, the body of scientific evidence available that has examined the effect of O_3 on the cardiovascular system has expanded. There is an emerging body of animal toxicological evidence demonstrating that short-term exposure to O_3 can lead to autonomic nervous system alterations (in heart rate and/or heart rate variability) and suggesting that proinflammatory signals may mediate cardiovascular effects. Interactions of O_3 with respiratory tract components result in secondary oxidation product formation and subsequent production of inflammatory mediators, which have the potential to penetrate the epithelial barrier and to initiate toxic effects systemically. In addition, animal toxicological studies of long-term exposure to O_3 provide evidence of enhanced atherosclerosis and ischemia/reperfusion (I/R) injury, corresponding with development of a systemic oxidative, proinflammatory environment. Recent experimental and epidemiologic studies have investigated O_3-related cardiovascular events and

This document is a prepublication version, signed by EPA Administrator, Gina McCarthy on 10/1/2015. We have taken steps to ensure the accuracy of this version, but it is not the official version.

are summarized in the ISA (U.S. EPA, 2013, section 6.3).

Controlled human exposure studies discussed in previous reviews have not demonstrated any consistent extrapulmonary effects. In this review, evidence from controlled human exposure studies suggests cardiovascular effects in response to short-term O_3 exposure (U.S. EPA, 2013, section 6.3.1) and provides some coherence with evidence from animal toxicology studies. Controlled human exposure studies also support the animal toxicological studies by demonstrating O_3-induced effects on blood biomarkers of systemic inflammation and oxidative stress, as well as changes in biomarkers that can indicate the potential for increased clotting following O_3 exposures. Increases and decreases in high frequency heart rate variability (HRV) have been reported. These changes in cardiac function observed in animal and human studies provide preliminary evidence for O_3-induced modulation of the autonomic nervous system through the activation of neural reflexes in the lung (U.S. EPA, 2013, section 5.3.2).

Overall, the ISA concludes that the available body of epidemiologic evidence examining the relationship between short-term exposures to O_3 concentrations and cardiovascular morbidity is inconsistent (U.S. EPA, 2013, section 6.3.2.9).

Despite the inconsistent evidence for an association between O_3 concentration and cardiovascular disease (CVD) morbidity, mortality studies indicate a consistent positive association between short-term O_3 exposure and cardiovascular mortality in multicity studies and in a multi-continent study. When examining mortality due to CVD, epidemiologic studies consistently observe positive associations with short-term exposure to O_3. Additionally, there is some evidence for an association between long-term exposure to O_3 and mortality, although the association between long-term ambient O_3 concentrations and cardiovascular mortality can be confounded by other pollutants (U.S. EPA, 2013). The ISA (U.S. EPA, 2013, section 6.3.4)

This document is a prepublication version, signed by EPA Administrator, Gina McCarthy on 10/1/2015. We have taken steps to ensure the accuracy of this version, but it is not the official version.

states that taken together, the overall body of evidence across the animal and human studies is sufficient to conclude that there is likely to be a causal relationship between relevant short-term exposures to O_3 and cardiovascular system effects.

iv. Premature Mortality – Short-Term Exposure

The 2006 AQCD concluded that the overall body of evidence was highly suggestive that short-term exposure to O_3 directly or indirectly contributes to nonaccidental and cardiopulmonary-related mortality in adults, but additional research was needed to more fully establish underlying mechanisms by which such effects occur (U.S. EPA, 2006a; U.S. EPA, 2013, p. 2-18). In building on the evidence for mortality from the last review, the ISA states (U.S. EPA, 2013, p. 6-261):

> The evaluation of new multicity studies that examined the association between short-term O_3 exposures and mortality found evidence that supports the conclusions of the 2006 AQCD. These new studies reported consistent positive associations between short-term O_3 exposure and all-cause (nonaccidental) mortality, with associations persisting or increasing in magnitude during the warm season, and provide additional support for associations between O_3 exposure and cardiovascular and respiratory mortality.

The 2006 AQCD reviewed a large number of time-series studies of associations between short-term O_3 exposures and total mortality including single- and multicity studies, and meta-analyses. Available studies reported some evidence for heterogeneity in O_3 mortality risk estimates across cities and across studies. Studies that conducted seasonal analyses reported larger O_3 mortality risk estimates during the warm or summer season. Overall, the 2006 AQCD identified robust associations between various measures of daily ambient O_3 concentrations and all-cause mortality, which could not be readily explained by confounding due to time, weather, or copollutants. With regard to cause-specific mortality, consistent positive associations were reported between short-term O_3 exposure and cardiovascular mortality, with less consistent

This document is a prepublication version, signed by EPA Administrator, Gina McCarthy on 10/1/2015. We have taken steps to ensure the accuracy of this version, but it is not the official version.

evidence for associations with respiratory mortality. The majority of the evidence for associations between O_3 and cause-specific mortality were from single-city studies, which had small daily mortality counts and subsequently limited statistical power to detect associations. The 2006 AQCD concluded that "the overall body of evidence is highly suggestive that O_3 directly or indirectly contributes to nonaccidental and cardiopulmonary-related mortality" (U.S. EPA, 2013, section 6.6.1).

Recent studies have strengthened the body of evidence that supports the association between short-term O_3 concentrations and mortality in adults. This evidence includes a number of studies reporting associations with nonaccidental as well as cause-specific mortality. Multi-continent and multicity studies have consistently reported positive and statistically significant associations between short-term O_3 concentrations and all-cause mortality, with evidence for larger mortality risk estimates during the warm or summer months (79 FR 75262; U.S. EPA, 2013 Figure 6-27; Table 6-42). Similarly, evaluations of cause-specific mortality have reported consistently positive associations with O_3, particularly in analyses restricted to the warm season (79 FR 75262; U.S. EPA, 2013 Fig. 6-37; Table 6-53).

In the previous review, multiple uncertainties remained regarding the relationship between short-term O_3 concentrations and mortality, including the extent of residual confounding by copollutants; characterization of the factors that modify the O_3-mortality association; the appropriate lag structure for identifying O_3-mortality effects; and the shape of the O_3-mortality concentration-response function and whether a threshold exists. Many of the studies, published since the last review, have attempted to address one or more of these uncertainties and are described in more detail in the proposal (79 FR 75262 and in the ISA (U.S. EPA, 2013, section 6.6.2).

This document is a prepublication version, signed by EPA Administrator, Gina McCarthy on 10/1/2015. We have taken steps to ensure the accuracy of this version, but it is not the official version.

In particular, recent studies have evaluated different statistical approaches to examine the shape of the O_3-mortality concentration-response relationship and to evaluate whether a threshold exists for O_3-related mortality. These studies are detailed in the proposal (79 FR 75262) and in the ISA (U.S. EPA, 2013, p. 2-32). The ISA reaches the following overall conclusions that the epidemiologic studies identified in the ISA indicated a generally linear C-R function with no indication of a threshold but that there is a lack of data at lower O_3 concentrations and therefore, less certainty in the shape of the C-R curve at the lower end of the distribution (U.S. EPA, 2013, p. 2-32).

c. Adversity of Effects

In making judgments as to when various O_3-related effects become regarded as adverse to the health of individuals, in previous NAAQS reviews, the EPA has relied upon the guidelines published by the ATS and the advice of CASAC. In 2000, the ATS published an official statement on "What Constitutes an Adverse Health Effect of Air Pollution?" (ATS, 2000a), which updated and built upon its earlier guidance (ATS, 1985). The earlier guidance defined adverse respiratory health effects as "medically significant physiologic changes generally evidenced by one or more of the following: (1) interference with the normal activity of the affected person or persons, (2) episodic respiratory illness, (3) incapacitating illness, (4) permanent respiratory injury, and/or (5) progressive respiratory dysfunction," while recognizing that perceptions of "medical significance" and "normal activity" may differ among physicians, lung physiologists and experimental subjects (ATS, 1985). The more recent guidance concludes that transient, reversible loss of lung function in combination with respiratory symptoms should

This document is a prepublication version, signed by EPA Administrator, Gina McCarthy on 10/1/2015. We have taken steps to ensure the accuracy of this version, but it is not the official version.

be considered adverse.[33] However, the committee also recommended "that a small, transient loss of lung function, by itself, should not automatically be designated as adverse" (ATS, 2000a, p. 670).

There is also a more specific consideration of population risk in the 2000 guidance. Specifically, the committee considered that a shift in the risk factor distribution, and hence the risk profile of the exposed population, should be considered adverse, even in the absence of the immediate occurrence of frank illness (ATS, 2000a, p. 668). For example, a population of asthmatics could have a distribution of lung function such that no individual has a level associated with clinically important impairment. Exposure to air pollution could shift the distribution to lower levels of lung function that still do not bring any individual to a level that is associated with clinically relevant effects. However, this would be considered to be adverse because individuals within the population would already have diminished reserve function, and therefore would be at increased risk to further environmental insult (ATS, 2000a, p. 668).

The ATS also concluded in its guidance that elevations of biomarkers such as cell numbers and types, cytokines, and reactive oxygen species may signal risk for ongoing injury and more serious effects or may simply represent transient responses, illustrating the lack of clear boundaries that separate adverse from nonadverse events. More subtle health outcomes also may be connected mechanistically to health effects that are clearly adverse, so that small changes in physiological measures may not appear clearly adverse when considered alone, but may be part of a coherent and biologically plausible chain of related health outcomes that include

[33] "In drawing the distinction between adverse and nonadverse reversible effects, this committee recommended that reversible loss of lung function in combination with the presence of symptoms should be considered as adverse" (ATS, 2000a).

This document is a prepublication version, signed by EPA Administrator, Gina McCarthy on 10/1/2015. We have taken steps to ensure the accuracy of this version, but it is not the official version.

responses that are clearly adverse, such as mortality (U.S. EPA, 2014c, section 3.1.2.1).

Application of the ATS guidelines to the least serious category of effects[34] related to ambient O_3 exposures, which are also the most numerous and, therefore, are also important from a public health perspective, involves judgments about which medical experts on CASAC panels and public commenters have in the past expressed diverse views. To help frame such judgments, in past reviews, the EPA has defined gradations of individual functional responses (e.g., decrements in FEV_1 and airway responsiveness) and symptomatic responses (e.g., cough, chest pain, wheeze), together with judgments as to the potential impact on individuals experiencing varying degrees of severity of these responses. These gradations were used by the EPA in the 1997 O_3 NAAQS review and slightly revised in the 2008 review (U.S. EPA, 1996b, p. 59; U.S. EPA, 2007, p. 3-72; 72 FR 37849, July 11, 2007). These gradations and impacts are summarized in Tables 3-2 and 3-3 in the 2007 O_3 Staff Paper (U.S. EPA, 2007, pp. 3-74 to 3-75).

For the purpose of estimating potentially adverse lung function decrements in active healthy people, the CASAC panel in the 2008 O_3 NAAQS review indicated that a focus on the mid to upper end of the range of moderate levels of functional responses is most appropriate (e.g., FEV_1 decrements $\geq$ 15% but < 20%) (Henderson, 2006; U.S. EPA, 2007, p. 3-76). In this review, CASAC reiterated that the "[e]stimation of FEV_1 decrements of $\geq$15% is appropriate as a scientifically relevant surrogate for adverse health outcomes in active healthy adults" (Frey, 2014c, p. 3).

For the purpose of estimating potentially adverse lung function decrements in people with lung disease, the CASAC panel in the 2008 O_3 NAAQS review indicated that a focus on the

[34] These include, for example, the transient and reversible effects demonstrated in controlled human exposure studies, such as lung function decrements or respiratory symptoms.

This document is a prepublication version, signed by EPA Administrator, Gina McCarthy on 10/1/2015. We have taken steps to ensure the accuracy of this version, but it is not the official version.

lower end of the range of moderate levels of functional responses is most appropriate (e.g., FEV_1 decrements ≥10%) (Henderson, 2006; U.S. EPA, 2007, p. 3-76). In their letter advising the Administrator on the reconsideration of the 2008 final decision, CASAC stated that "[a] 10% decrement in FEV_1 can lead to respiratory symptoms, especially in individuals with pre-existing pulmonary or cardiac disease. For example, people with chronic obstructive pulmonary disease have decreased ventilatory reserve (i.e., decreased baseline FEV_1) such that a ≥ 10% decrement could lead to moderate to severe respiratory symptoms" (Samet, 2011). In this review, CASAC provided similar advice, stating that "[a]n FEV_1 decrement of ≥ 10% is a scientifically relevant surrogate for adverse health outcomes for people with asthma and lung disease", and that such decrements "could be adverse for people with lung disease" (Frey, 2014c, pp. 3, 7).

In judging the extent to which these impacts represent effects that should be regarded as adverse to the health status of individuals, in previous NAAQS reviews, the EPA has also considered whether effects were experienced repeatedly during the course of a year or only on a single occasion (U.S. EPA, 2007). While some experts would judge single occurrences of moderate responses to be a "nuisance," especially for healthy individuals, a more general consensus view of the adversity of such moderate responses emerges as the frequency of occurrence increases. In particular, not every estimated occurrence of an O_3-induced FEV_1 decrement will be adverse.[35] However, repeated occurrences of moderate responses, even in otherwise healthy individuals, may be considered to be adverse since they could set the stage for more serious illness (61 FR 65723). The CASAC panel in the 1997 NAAQS review expressed a consensus view that these "criteria for the determination of an adverse physiological response

[35] As noted above, the ATS recommended "that a small, transient loss of lung function, by itself, should not automatically be designated as adverse" (ATS, 2000a, p. 670).

This document is a prepublication version, signed by EPA Administrator, Gina McCarthy on 10/1/2015. We have taken steps to ensure the accuracy of this version, but it is not the official version.

were reasonable" (Wolff, 1995). In the review completed in 2008, as in the current review (II.B, II.C below), estimates of repeated occurrences continued to be an important public health policy factor in judging the adversity of moderate lung function decrements in healthy and asthmatic people (72 FR 37850, July 11, 2007).

d. Ozone-Related Impacts on Public Health

The currently available evidence expands the understanding of populations that were identified to be at greater risk of O_3-related health effects at the time of the last review (i.e., people who are active outdoors, people with lung disease, children and older adults and people with increased responsiveness to O_3) and supports the identification of additional factors that may lead to increased risk (U.S. EPA, 2006a, section 6.3; U.S. EPA, 2013, Chapter 8). Populations and lifestages may be at greater risk for O_3-related health effects due to factors that contribute to their susceptibility and/or vulnerability to O_3. The definitions of susceptibility and vulnerability have been found to vary across studies, but in most instances "susceptibility" refers to biological or intrinsic factors (e.g., lifestage, sex, preexisting disease/conditions) while "vulnerability" refers to non-biological or extrinsic factors (e.g., socioeconomic status [SES]) (U.S. EPA, 2013, p. 8-1; U.S. EPA, 2010, 2009b). In some cases, the terms "at-risk" and "sensitive" have been used to encompass these concepts more generally. In the ISA, PA, and proposal, "at-risk" is the all-encompassing term used to define groups with specific factors that increase their risk of O_3-related health effects.

There are multiple avenues by which groups may experience increased risk for O_3-induced health effects. A population or lifestage[36] may exhibit greater effects than other

[36] Lifestages, which in this case includes childhood and older adulthood, are experienced by most people over the course of a lifetime, unlike other factors associated with at-risk populations.

This document is a prepublication version, signed by EPA Administrator, Gina McCarthy on 10/1/2015. We have taken steps to ensure the accuracy of this version, but it is not the official version.

populations or lifestages exposed to the same concentration or dose, or they may be at greater risk due to increased exposure to an air pollutant (e.g., time spent outdoors). A group with intrinsically increased risk would have some factor(s) that increases risk through a biological mechanism and, in general, would have a steeper concentration-risk relationship, compared to those not in the group. Factors that are often considered intrinsic include pre-existing asthma, genetic background, and lifestage. A group of people could also have extrinsically increased risk, which would be through an external, non-biological factor, such as socioeconomic status (SES) and diet. Some groups are at risk of increased internal dose at a given exposure concentration, for example, because of breathing patterns. This category would include people who work or exercise outdoors. Finally, there are those who might be placed at increased risk for experiencing greater exposures by being exposed to higher O_3 concentrations. This would include, for example, groups of people with greater exposure to ambient O_3 due to less availability or use of home air conditioners such that they are more likely to be in locations with open windows on high O_3 days. Some groups may be at increased risk of O_3-related health effects through a combination of factors. For example, children tend to spend more time outdoors when O_3 levels are high, and at higher levels of activity than adults, which leads to increased exposure and dose, and they also have biological, or intrinsic, risk factors (e.g., their lungs are still developing) (U.S. EPA, 2013, Chapter 8). An at-risk population or lifestage is more likely to experience adverse health effects related to O_3 exposures and/or, develop more severe effects from exposure than the general population. The populations and lifestages identified by the ISA (U.S. EPA, 2013, section 8.5) identified that have "adequate" evidence for increased O_3-related health effects are people with certain genotypes, people with asthma, younger and older age groups, people with reduced intake of certain nutrients, and outdoor workers. These at-risk populations and lifestages

This document is a prepublication version, signed by EPA Administrator, Gina McCarthy on 10/1/2015. We have taken steps to ensure the accuracy of this version, but it is not the official version.

are described in more detail in section II.B.4 of the proposal (79 FR 75264-269).

One consideration in the assessment of potential public health impacts is the size of various population groups for which there is adequate evidence of increased risk for health effects associated with O_3-related air pollution exposure (U.S. EPA, 2014c, section 3.1.5.2). The factors for which the ISA judged the evidence to be "adequate" with respect to contributing to increased risk of O_3-related effects among various populations and lifestages included: asthma; childhood and older adulthood; diets lower in vitamins C and E; certain genetic variants; and working outdoors (U.S. EPA, 2013, section 8.5). No statistics are available to estimate the size of an at-risk population based on nutritional status or genetic variability.

With regard to asthma, Table 3-7 in the PA (U.S. EPA, 2014c, section 3.1.5.2) summarizes information on the prevalence of current asthma by age in the U.S. adult population in 2010 (Schiller et al. 2012; children - Bloom et al., 2011). Individuals with current asthma constitute a fairly large proportion of the population, including more than 25 million people. Asthma prevalence tends to be higher in children than adults. Within the U.S., approximately 8.2% of adults have reported currently having asthma (Schiller et al., 2012) and 9.5% of children have reported currently having asthma (Bloom et al., 2011).[37]

With regard to lifestages, based on U.S. census data from 2010 (Howden and Meyer, 2011), about 74 million people, or 24% of the U.S. population, are under 18 years of age and more than 40 million people, or about 13% of the U.S. population, are 65 years of age or older. Hence, a large proportion of the U.S. population (i.e., more than a third) is included in age

[37] As noted below (II.C.3.a.ii), asthmatics can experience larger O_3-induced respiratory effects than non-asthmatic, healthy adults. The responsiveness of asthmatics to O_3 exposures could depend on factors that have not been well-evaluated such as asthma severity, the effectiveness of asthma control, or the prevalence of medication use.

This document is a prepublication version, signed by EPA Administrator, Gina McCarthy on 10/1/2015. We have taken steps to ensure the accuracy of this version, but it is not the official version.

groups that are considered likely to be at increased risk for health effects from ambient O_3 exposure.

With regard to outdoor workers, in 2010, approximately 11.7% of the total number of people (143 million people) employed, or about 16.8 million people, worked outdoors one or more days per week (based on worker surveys).[38] Of these, approximately 7.4% of the workforce, or about 7.8 million people, worked outdoors three or more days per week.

While it is difficult to estimate the total number of people in groups that are at greater risk from exposure to O_3, due to the overlap in members of the different at-risk population groups, the proportion of the total population at greater risk is large. The size of the at-risk population combined with the estimates of risk of different health outcomes associated with exposure to O_3 can give an indication of the magnitude of O_3 impacts on public health.

2. Overview of Human Exposure and Health Risk Assessments

To put judgments about health effects into a broader public health context, the EPA has developed and applied models to estimate human exposures to O_3 and O_3-associated health risks. Exposure and risk estimates that are output from such models are presented and assessed in the HREA (U.S. EPA, 2014a). Section II.C of the proposal discusses the quantitative assessments of O_3 exposures and O_3-related health risks that are presented in the HREA (79 FR 75270). Summaries of these discussions are provided below for the approach used to adjust air quality for quantitative exposure and risk analyses in the HREA (II.A.2.a), the HREA assessment of

[38] The O*NET program is the nation's primary source of occupational information. Central to the project is the O*NET database, containing information on hundreds of standardized and occupation-specific descriptors. The database, which is available to the public at no cost, is continually updated by surveying a broad range of workers from each occupation. http://www.onetcenter.org/overview.html. http://www.onetonline.org/find/descriptor/browse/Work_Context/4.C.2/.

This document is a prepublication version, signed by EPA Administrator, Gina McCarthy on 10/1/2015. We have taken steps to ensure the accuracy of this version, but it is not the official version.

exposures to ambient O_3 (II.A.2.b), and the HREA assessments of O_3-related health risks (II.A.2.c).

a. Air Quality Adjustment

As discussed in section II.C.1 of the proposal (79 FR 75270), the HREA uses a photochemical model to estimate sensitivities of O_3 to changes in precursor emissions in order to estimate ambient O_3 concentrations that would just meet the current and alternative standards (U.S. EPA, 2014a, Chapter 4).[39] For the 15 urban study areas evaluated in the HREA,[40] this model-based adjustment approach estimates hourly O_3 concentrations at each monitor location when modeled U.S. anthropogenic precursor emissions (i.e., NO_X, VOC)[41] are reduced. The HREA estimates air quality that just meets the current and alternative standards for the 2006-2008 and 2008-2010 periods.[42]

As discussed in Chapter 4 of the HREA (U.S. EPA, 2014a), this approach to adjusting air quality models the physical and chemical atmospheric processes that influence ambient O_3 concentrations. Compared to the quadratic rollback approach used in previous reviews, it

[39] The HREA uses the Community Multi-scale Air Quality (CMAQ) photochemical model instrumented with the higher order direct decoupled method (HDDM) to estimate O_3 concentrations that would occur with the achievement of the current and alternative O_3 standards (U.S. EPA, 2014a, Chapter 4).

[40] The urban study areas assessed are Atlanta, Baltimore, Boston, Chicago, Cleveland, Dallas, Denver, Detroit, Houston, Los Angeles, New York, Philadelphia, Sacramento, St. Louis, and Washington, DC.

[41] Exposure and risk analyses for most of the urban study areas focus on reducing U.S. anthropogenic NO_X emissions alone. The exceptions are Chicago and Denver. Exposure and risk analyses for Chicago and Denver are based on reductions in emissions of both NO_X and VOC (U.S. EPA, 2014a, section 4.3.3.1; Appendix 4D).

[42] These estimates thus reflect design values – 8 hour values using the form of the NAAQS that meet the level of the current or alternative standards. These simulations are illustrative and do not reflect any consideration of specific control programs designed to achieve the reductions in emissions required to meet the specified standards. Further, these simulations do not represent predictions of when, whether, or how areas might meet the specified standards.

This document is a prepublication version, signed by EPA Administrator, Gina McCarthy on 10/1/2015. We have taken steps to ensure the accuracy of this version, but it is not the official version.

provides more realistic estimates of the spatial and temporal responses of O_3 to reductions in precursor emissions. Because ambient NO_X can contribute both to the formation and destruction of O_3 (U.S. EPA, 2014a, Chapter 4), the response of ambient O_3 concentrations to reductions in NO_X emissions is more variable than indicated by the quadratic rollback approach. This improved approach to adjusting O_3 air quality is consistent with recommendations from the National Research Council of the National Academies (NRC, 2008). In addition, CASAC strongly supported the new approach as an improvement and endorsed the way it was utilized in the HREA, stating that "the quadratic rollback approach has been replaced by a scientifically more valid Higher-order Decoupled Direct Method (HDDM)" and that "[t]he replacement of the quadratic rollback procedure by the HDDM procedure is important and supported by the CASAC" (Frey, 2014a, pp. 1 and 3).

Within urban study areas, the model-based air quality adjustments show reductions in the O_3 levels at the upper ends of ambient concentrations and increases in the O_3 levels at the lower ends of those distributions (U.S. EPA, 2014a, section 4.3.3.2, Figures 4-9 and 4-10).[43] Seasonal means of daily O_3 concentrations generally exhibit only modest changes upon model adjustment, reflecting the seasonal balance between daily decreases in relatively higher concentrations and increases in relatively lower concentrations (U.S. EPA, 2014a, Figures 4-9 and 4-10). The resulting compression in the seasonal distributions of ambient O_3 concentrations is evident in all of the urban study areas evaluated, though the degree of compression varies considerably across areas (U.S. EPA, 2014a, Figures 4-9 and 4-10).

[43] It is important to note that sensitivity analyses in the HREA indicate that the increases in low O_3 concentrations are smaller when NO_X and VOC emissions are reduced than when only NO_X emissions are reduced (U.S. EPA, 2014a, Appendix 4-D, section 4.7).

This document is a prepublication version, signed by EPA Administrator, Gina McCarthy on 10/1/2015. We have taken steps to ensure the accuracy of this version, but it is not the official version.

As discussed in the PA (U.S. EPA, 2014c, section 3.2.1), adjusted patterns of O_3 air quality have important implications for exposure and risk estimates in urban case study areas. Estimates influenced largely by the upper ends of the distribution of ambient concentrations (i.e., exposures of concern and lung function risk estimates, as discussed in sections 3.2.2 and 3.2.3.1 of the PA) will decrease with model-adjustment to the current and alternative standards. In contrast, seasonal risk estimates influenced by the full distribution of ambient O_3 concentrations (i.e., epidemiology-based risk estimates, as discussed in section 3.2.3.2 of the PA) either increase or decrease in response to air quality adjustment, depending on the balance between the daily decreases in high O_3 concentrations and increases in low O_3 concentrations.[44]

To evaluate uncertainties in air quality adjustments, the HREA assessed the extent to which the modeled O_3 response to reductions in NO_X emissions appropriately represent the trends observed in monitored ambient O_3 following actual reductions in NO_X emissions, and the extent to which the O_3 response to reductions in precursor emissions could differ with emissions reduction strategies that are different from those used in HREA to generate risk estimates.

To evaluate the first issue, the HREA conducted a national analysis evaluating trends in monitored ambient O_3 concentrations during a time period when the U.S. experienced large-scale reductions in NO_X emissions (i.e., 2001 to 2010). Analyses of trends in monitored O_3 indicate that over such a time period, the upper end of the distribution of monitored O_3 concentrations (i.e., indicated by the 95th percentile) generally decreased in urban and non-urban locations across the U.S. (U.S. EPA, 2014a, Figure 8-29). During this same time period, median O_3

[44] In addition, because epidemiology-based risk estimates use "area-wide" average O_3 concentrations, calculated by averaging concentrations across multiple monitors in urban case study areas (section 3.2.3.2 below), risk estimates on a given day depend on the daily balance between increasing and decreasing O_3 concentrations at individual monitors.

This document is a prepublication version, signed by EPA Administrator, Gina McCarthy on 10/1/2015. We have taken steps to ensure the accuracy of this version, but it is not the official version.

concentrations decreased in suburban and rural locations, and in some urban locations. However, median concentrations increased in some large urban centers (U.S. EPA, 2014a, Figure 8-28). As discussed in the HREA, these increases in median concentrations likely reflect the increases in relatively low O_3 concentrations that can occur near important sources of NO_X upon reductions in NO_X emissions (U.S. EPA, 2014a, section 8.2.3.1). These patterns of monitored O_3 during a period when the U.S. experienced large reductions in NO_X emissions are qualitatively consistent with the modeled responses of O_3 to reductions in NO_X emissions.

To evaluate the second issue, the HREA assessed the O_3 air quality response to reducing both NO_X and VOC emissions (i.e., in addition to assessing reductions in NO_X emissions alone) for a subset of seven urban study areas. As discussed in the PA (U.S. EPA, 2014c, section 3.2.1), the addition of VOC reductions generally resulted in larger decreases in mid-range O_3 concentrations (25th to 75th percentiles) (U.S. EPA, 2014a, Appendix 4D, section 4.7).[45] In addition, in all seven of the urban study areas evaluated, the increases in low O_3 concentrations were smaller for the NO_X/VOC scenarios than the NO_X alone scenarios (U.S. EPA, 2014a, Appendix 4D, section 4.7). This was most apparent for Denver, Houston, Los Angeles, New York, and Philadelphia. Given the impacts on total risk estimates of increases in low O_3 concentrations (discussed below), these results suggest that in some locations optimized emissions reduction strategies could result in larger reductions in O_3-associated mortality and

[45] This was the case for all of the urban study areas evaluated, with the exception of New York (U.S. EPA, 2014a, Appendix 4-D, section 4.7). In this analysis, emissions of NO_X and VOC were reduced by equal percentages, a scenario not likely to reflect the optimal combination for reducing risks. In most of the urban study areas the inclusion of VOC emissions reductions did not alter the NO_X emissions reductions required to meet the current or alternative standards. The exceptions are Chicago and Denver, for which the HREA risk estimates are based on reductions in both NO_X and VOC (U.S. EPA, 2014a, section 4.3.3.1).

This document is a prepublication version, signed by EPA Administrator, Gina McCarthy on 10/1/2015. We have taken steps to ensure the accuracy of this version, but it is not the official version.

morbidity than indicated by HREA estimates.

b. Exposure Assessment

As discussed in section II.C.2 of the proposal, the O_3 exposure assessment presented in the HREA (U.S. EPA, 2014a, Chapter 5) provides estimates of the number and percent of people exposed to various concentrations of ambient O_3 while at specified exertion levels. The HREA estimates exposures in the 15 urban study areas for four study groups, all school-age children (ages 5 to 18), asthmatic school-age children, asthmatic adults (ages 19 to 95), and all older adults (ages 65 to 95), reflecting the evidence indicating that these populations are at increased risk for O_3-attributable effects (U.S. EPA, 2013, Chapter 8; II.A.1.d, above). An important purpose of these exposure estimates is to provide perspective on the extent to which air quality adjusted to just meet the current O_3 NAAQS could be associated with exposures to O_3 concentrations reported to result in respiratory effects.[46] These analyses of exposure assessment incorporate behavior patterns, including estimates of physical exertion, that are critical in assessing whether ambient concentrations of O_3 may pose a public health risk.[47] In particular, exposures to ambient or near-ambient O_3 concentrations have only been shown to result in potentially adverse effects if the ventilation rates of people in the exposed populations are raised to a sufficient degree (e.g., through physical exertion) (U.S. EPA, 2013, section 6.2.1.1).

---

[46] In addition, the range of modeled personal exposures to ambient O_3 provide an essential input to the portion of the health risk assessment based on exposure-response functions (for lung function decrements) from controlled human exposure studies. The health risk assessment based on exposure-response information is discussed below (II.C.3).

[47] See 79 FR 75269 "The activity pattern of individuals is an important determinant of their exposure. Variation in O_3 concentrations among various microenvironments means that the amount of time spent in each location, as well as the level of activity, will influence an individual's exposure to ambient O_3. Activity patterns vary both among and within individuals, resulting in corresponding variations in exposure across a population and over time" (internal citations omitted).

This document is a prepublication version, signed by EPA Administrator, Gina McCarthy on 10/1/2015. We have taken steps to ensure the accuracy of this version, but it is not the official version.

Estimates of such "exposures of concern" provide perspective on the potential public health impacts of O_3-related effects, including effects that cannot currently be evaluated in a quantitative risk assessment.[48]

The HREA estimates 8-hour exposures at or above benchmark concentrations of 60, 70, and 80 ppb for individuals engaged in moderate or greater exertion (i.e., to approximate conditions in the controlled human exposure studies on which benchmarks are based). Benchmarks reflect exposure concentrations at which O_3-induced respiratory effects are known to occur in some healthy adults engaged in moderate, quasi-continuous exertion, based on evidence from controlled human exposure studies (U.S. EPA, 2013, section 6.2; U.S. EPA, 2014c, section 3.1.2.1). The amount of weight to place on the estimates of exposures at or above specific benchmark concentrations depends in part on the weight of the scientific evidence concerning health effects associated with O_3 exposures at those benchmark concentrations. It also depends on judgments about the importance, from a public health perspective, of the health effects that are known or can reasonably be inferred to occur as a result of exposures at benchmark concentrations (U.S. EPA, 2014c, sections 3.1.3, 3.1.5).

In considering estimates of O_3 exposures of concern at or above benchmarks of 60, 70, and 80 ppb, the PA focuses on modeled exposures for school-age children (ages 5-18), including asthmatic school-age children, which are key at-risk populations identified in the ISA (U.S. EPA, 2014c, section 3.1.5). The percentages of children estimated to experience exposures of concern

[48] In this review, the term "exposure of concern" is defined as a personal exposure, while at moderate or greater exertion, to 8-hour average ambient O_3 concentrations at and above specific benchmarks levels. As discussed below, these benchmark levels represent exposure concentrations at which O_3-induced health effects are known to occur, or can reasonably be anticipated to occur, in some individuals.

This document is a prepublication version, signed by EPA Administrator, Gina McCarthy on 10/1/2015. We have taken steps to ensure the accuracy of this version, but it is not the official version.

are considerably larger than the percentages estimated for adult populations (i.e., approximately 3-fold larger across urban study areas)[49] (U.S. EPA, 2014a, section 5.3.2 and Figures 5-5 to 5-8). The larger exposure estimates for children are due primarily to the larger percentage of children estimated to spend an extended period of time being physically active outdoors when O_3 concentrations are elevated (U.S. EPA, 2014a, sections 5.3.2 and 5.4.1).

Although exposure estimates differ between children and adults, the patterns of results across the urban study areas and years are similar among all of the populations evaluated (U.S. EPA, 2014a, Figures 5-5 to 5-8). Therefore, while the PA highlights estimates in children, including asthmatic school-age children, it also notes that the patterns of exposures estimated for children represent the patterns estimated for adult asthmatics and older adults.

Table 1 of the proposal (79 FR 75272 to 75273) summarizes key results from the exposure assessment. This table is reprinted below.

Table 1. Summary of Estimated Exposures of Concern in All School-age Children for the Current and Alternative O_3 Standards in Urban Study Areas

Benchmark Concentration	Standard Level (ppb)	Average % Children Exposed[50]	Average Number of Children Exposed	% Children - Worst Year and Worst Area

[49] HREA exposure estimates for all children and asthmatic children are virtually indistinguishable, in terms of the percent estimated to experience exposures of concern (U.S. EPA, 2014a, Chapter 5). Consistent with this, HREA analyses indicate that activity data for people with asthma is generally similar to non-asthmatic populations (U.S. EPA, 2014a, Appendix 5G, Tables 5G2-to 5G-5).

[50] Estimates for each urban case study area were averaged for the years evaluated in the HREA (2006 to 2010). Ranges reflect the ranges across urban study areas. Estimates smaller than 0.05% were rounded downward to zero (from U.S. EPA, 2014a, Tables 5-11 and 5-12). Numbers in parentheses reflect averages across urban study areas, as well as over the years evaluated in the HREA.

This document is a prepublication version, signed by EPA Administrator, Gina McCarthy on 10/1/2015. We have taken steps to ensure the accuracy of this version, but it is not the official version.

			[Average Number of Asthmatic Children][51]	
One or more exposures of concern per season				
≥ 80 ppb	75	0 - 0.3 (0.1)	27,000 [3,000]	1.1
	70	0 - 0.1 (0)	3,700 [300]	0.2
	65	0 (0)	300 [0]	0
	60	0 (0)	100[52] [0]	0
≥ 70 ppb	75	0.6 - 3.3 (1.9)	362,000 [40,000]	8.1
	70	0.1 - 1.2 (0.5)	94,000 [10,000]	3.2
	65	0 - 0.2 (0.1)	14,000 [2,000]	0.5
	60	0 (0)	1,400 [200]	0.1
≥ 60 ppb	75	9.5 – 17 (12.2)	2,316,000 [246,000]	25.8
	70	3.3 - 10.2 (6.2)	1,176,000 [126,000]	18.9
	65	0 - 4.2 (2.1)	392,000 [42,000]	9.5
	60	0 - 1.2 (0.4)	70,000 [8,000]	2.2
Two or more exposures of concern per season				
≥ 80 ppb	75	0 (0)	600 [100]	0.1
	70	0 (0)	0 [0]	0
	65	0 (0)	0 [0]	0
	60	0 (0)	0 [0]	0
≥ 70 ppb	75	0.1 - 0.6 (0.2)	46,000 [5,000]	2.2
	70	0 - 0.1 (0)	5,400 [600]	0.4
	65	0 (0)	300 [100]	0
	60	0 (0)	0 [0]	0
≥ 60 ppb	75	3.1 - 7.6 (4.5)	865,000 [93,000]	14.4
	70	0.5 - 3.5 (1.7)	320,000 [35,000]	9.2
	65	0 - 0.8 (0.3)	67,000 [7,500]	2.8
	60	0 - 0.2 (0)	5,100 [700]	0.3

Uncertainties in exposure estimates are summarized in section II.C.2.b of the proposal

[51] Numbers of children exposed in each urban case study area were averaged over the years 2006 to 2010. These averages were then summed across urban study areas. Numbers were rounded to nearest thousand unless otherwise indicated. Estimates smaller than 50 were rounded downward to zero (from U.S. EPA, 2014a, Appendix 5F Table 5F-5).

[52] As discussed in section 4.3.3 of the HREA, the model-based air quality adjustment approach used to estimate exposures and lung function decrements associated with the current and alternative standards was unable to estimate the distribution of ambient O_3 concentrations in New York City upon just meeting an alternative standard with a level of 60 ppb. Therefore, for the 60 ppb standard level, the numbers of children and asthmatic children, and the ranges of percentages, reflect all of the urban study areas except New York.

This document is a prepublication version, signed by EPA Administrator, Gina McCarthy on 10/1/2015. We have taken steps to ensure the accuracy of this version, but it is not the official version.

(79 FR 75273). For example, due to variability in responsiveness, only a subset of individuals who experience exposures at or above a benchmark concentration can be expected to experience health effects.[53] In addition, not all of these effects will be adverse. Given the lack of sufficient exposure-response information for most of the health effects that informed benchmark concentrations, estimates of the number of people likely to experience exposures at or above benchmark concentrations generally cannot be translated into quantitative estimates of the number of people likely to experience specific health effects.[54] The PA views health-relevant exposures as a continuum with greater confidence and less uncertainty about the existence of adverse health effects at higher O_3 exposure concentrations, and less confidence and greater uncertainty as one considers lower exposure concentrations (e.g., U.S. EPA, 2014c, sections 3.1 and 4.6). This view draws from the overall body of available health evidence, which indicates that as exposure concentrations increase, the incidence, magnitude, and severity of effects increases.

Another important uncertainty is that there is very limited evidence from controlled human exposure studies, which provided the basis for health benchmark concentrations for both exposures of concern and lung function decrements, related to clinical responses in at-risk populations. Compared to the healthy young adults included in the controlled human exposure studies, members of at-risk populations could be more likely to experience adverse effects, could experience larger and/or more serious effects, and/or could experience effects following

[53] As noted below (II.C.3.a.ii), in the case of asthmatics, responsiveness to O_3 could depend on factors that have not been well-evaluated, such as asthma severity, the effectiveness of asthma control, or the prevalence of medication use.
[54] The exception to this is lung function decrements, as discussed below (and in U.S. EPA, 2014c, section 3.2.3.1).

This document is a prepublication version, signed by EPA Administrator, Gina McCarthy on 10/1/2015. We have taken steps to ensure the accuracy of this version, but it is not the official version.

exposures to lower O_3 concentrations.[55]

There are also uncertainties associated with the exposure modelling. These are described most fully, and their potential impact characterized, in section 5.5.2 of the HREA (U.S. EPA, 2013, pp. 5-72 to 5-79). These include interpretation of activity patterns set forth in diaries which do not typically distinguish the basis for activity patterns and so may reflect averting behavior,[56] and whether the HREA underestimates exposures for groups spending especially large proportion of time being active outdoors during the O_3 season (outdoor workers and especially active children).

c. Quantitative Health Risk Assessments

As discussed in section II.C.3 of the proposal (79 FR 75274), for some health endpoints, there is sufficient scientific evidence and information available to support the development of quantitative estimates of O_3-related health risks. In the current review, for short-term O_3 concentrations, the HREA estimates lung function decrements; respiratory symptoms in asthmatics; hospital admissions and emergency department visits for respiratory causes; and all-cause mortality (U.S. EPA, 2014a). For long-term O_3 concentrations, the HREA estimates respiratory mortality (U.S. EPA, 2014a).[57] Estimates of O_3-induced lung function decrements are based on exposure modeling using the MSS model (see section II.1.b.i.(1) above, and 79 FR

[55] "The CASAC further notes that clinical studies do not address sensitive subgroups, such as children with asthma, and that there is a scientific basis to anticipate that the adverse effects for such subgroups are likely to be more significant at 60 ppb than for healthy adults" (Frey 2014a, . 7).

[56] See EPA 2014a pp. 5-53 to 54 describing EPA's sensitivity analysis regarding impacts of potential averting behavior for school-age children on the exposure and lung function decrement estimate, and see also section B.2.a.i below.

[57] Estimates of O_3-associated respiratory mortality are based on the study by Jerrett et al. (2009). This study used seasonal averages of 1-hour daily maximum O_3 concentrations to estimate long-term concentrations.

This document is a prepublication version, signed by EPA Administrator, Gina McCarthy on 10/1/2015. We have taken steps to ensure the accuracy of this version, but it is not the official version.

75250), combined with exposure-response relationships from controlled human exposure studies (U.S. EPA, 2014a, Chapter 6). Estimates of O_3-associated respiratory symptoms, hospital admissions and emergency department visits, and mortality are based on concentration-response relationships from epidemiologic studies (U.S. EPA, 2014a, Chapter 7). As with the exposure assessment discussed above, O_3-associated health risks are estimated for recent air quality and for ambient concentrations adjusted to just meet the current and alternative O_3 standards, based on 2006-2010 air quality and adjusted precursor emissions. The following sections summarize the discussions from the proposal on the lung function risk assessment (II.A.2.c.i) and the epidemiology-based morbidity and mortality risk assessments (II.A.2.c.ii).

i. Lung Function Risk Assessment

The HREA estimates risks of lung function decrements in school-aged children (ages 5 to 18), asthmatic school-aged children, and the general adult population for the 15 urban study areas. The results presented in the HREA are based on an updated dose-threshold model that estimates FEV_1 responses for individuals following short-term exposures to O_3 (McDonnell et al., 2012), reflecting methodological improvements since the last review (II.B.2.a.i (1), above; U.S. EPA, 2014a, section 6.2.4). The impact of the dose threshold is that O_3-induced FEV_1 decrements result primarily from exposures on days with average ambient O_3 concentrations above about 40 ppb (U.S. EPA, 2014a, section 6.3.1, Figure 6-9).[58]

Table 2 in the proposal (79 FR 75275), and reprinted below, summarizes key results from

[58] Analysis of this issue in the HREA is based on risk estimates in Los Angeles for 2006 unadjusted air quality. The HREA shows that more than 90% of daily instances of FEV_1 decrements $\geq$ 10% occur when 8-hr average ambient concentrations are above 40 ppb for this modeled scenario. The HREA notes that the distribution of responses will be different for different study areas, years, and air quality scenarios (U.S. EPA, 2014c, Chapter 6).

This document is a prepublication version, signed by EPA Administrator, Gina McCarthy on 10/1/2015. We have taken steps to ensure the accuracy of this version, but it is not the official version.

the lung function risk assessment. Table 2 presents estimates of the percentages of school-aged children estimated to experience O_3-induced FEV_1 decrements ≥ 10, 15, or 20% when air quality was adjusted to just meet the current and alternative 8-hour O_3 standards. Table 2 also presents the numbers of children, including children with asthma, estimated to experience such decrements.

Table 2. Summary of Estimated O_3-Induced Lung Function Decrements for the Current and Potential Alternative O_3 Standards in Urban Case Study Areas

Lung Function Decrement	Alternative Standard Level	Average % Children[59]	Number of Children (5 to 18 years) [Number of Asthmatic Children][60]	% Children Worst Year and Area
One or more decrements per season				
≥ 10%	75	14-19	3,007,000 [312,000]	22
	70	11-17	2,527,000 [261,000]	20
	65	3-15	1,896,000 [191,000]	18
	60	5-11	1,404,000 [139,000][61]	13
≥ 15%	75	3-5	766,000 [80,000]	7
	70	2-4	562,000 [58,000]	5
	65	0-3	356,000 [36,000]	4
	60	1-2	225,000 [22,000]	3
≥ 20%	75	1-2	285,000 [30,000]	2.8
	70	1-2	189,000 [20,000]	2.1
	65	0-1	106,000 [11,000]	1.4
	60	0-1	57,000 [6,000]	0.9
Two or more decrements per season				
≥ 10%	75	7.5-12	1,730,000 [179,000]	14

[59] Estimates in each urban case study area were averaged for the years evaluated in the HREA (2006 to 2010). Ranges reflect the ranges across urban study areas.
[60] Numbers of children estimated to experience decrements in each study urban case study area were averaged over 2006 to 2010. These averages were then summed across urban study areas. Numbers are rounded to nearest thousand unless otherwise indicated.
[61] As discussed in section 4.3.3 of the HREA, the model-based air quality adjustment approach used to estimate risks associated with the current and alternative standards was unable to estimate the distribution of ambient O_3 concentrations in New York City upon just meeting an alternative standard with a level of 60 ppb. Therefore, for the 60 ppb standard level, the numbers of children and asthmatic children experiencing decrements, and the ranges of percentages of such children across study areas, reflect all of the urban study areas except New York City. Because of this, in some cases (i.e., when New York City provided the smallest risk estimate), the lower end of the ranges in table 2 are higher for a standard level of 60 ppb than for a level of 65 ppb.

This document is a prepublication version, signed by EPA Administrator, Gina McCarthy on 10/1/2015. We have taken steps to ensure the accuracy of this version, but it is not the official version.

	70	5.5-11	1,414,000 [145,000]	13
	65	1.3-8.8	1,023,000 [102,000]	11
	60	2.1-6.4	741,000 [73,000]	7.3
≥ 15%	75	1.7-2.9	391,000 [40,000]	3.8
	70	0.9-2.4	276,000 [28,000]	3.1
	65	0.1-1.8	168,000 [17,000]	2.3
	60	0.2-1.0	101,000 [10,000]	1.4
≥ 20%	75	0.5-1.1	128,000 [13,000]	1.5
	70	0.3-0.8	81,000 [8,000]	1.1
	65	0-0.5	43,000 [4,000]	0.8
	60	0-0.2	21,000 [2,000]	0.4

Uncertainties in estimates of lung function risks are summarized in section II.C.3.a.ii of the proposal (79 FR 75275). In addition to the uncertainties noted for exposure estimates, an uncertainty which impacts lung function risk estimates stems from the lack of exposure-response information in children. In the near absence of controlled human exposure data for children, risk estimates are based on the assumption that children exhibit the same lung function response following O_3 exposures as healthy 18 year olds (i.e., the youngest age for which controlled human exposure data is generally available) (U.S. EPA, 2014a, section 6.5.3). This assumption is justified in part by the findings of McDonnell et al. (1985), who reported that children (8-11 years old) experienced FEV_1 responses similar to those observed in adults (18-35 years old) (U.S. EPA, 2014a, p. 3-10). In addition, as discussed in the ISA (U.S. EPA, 2013, section 6.2.1), summer camp studies of school-aged children reported O_3-induced lung function decrements similar in magnitude to those observed in controlled human exposure studies using adults. In extending the risk model to children, the HREA thus fixes the age term in the model at its highest value, the value for age 18. Notwithstanding the information just summarized supporting this approach, EPA acknowledges the uncertainty involved, and notes that the approach could result in either over- or underestimates of O_3-induced lung function decrements in children,

This document is a prepublication version, signed by EPA Administrator, Gina McCarthy on 10/1/2015. We have taken steps to ensure the accuracy of this version, but it is not the official version.

depending on how children compare to the adults used in controlled human exposure studies (U.S. EPA, 2014a, section 6.5.3).

A related source of uncertainty is that the risk assessment estimates of O_3-induced decrements in asthmatics used the exposure-response relationship developed from data collected from healthy individuals. Although the evidence has been mixed (U.S. EPA, 2013, section 6.2.1.1), several studies have reported statistically larger, or a tendency toward larger, O_3-induced lung function decrements in asthmatics than in non-asthmatics (Kreit et al., 1989; Horstman et al., 1995; Jorres et al., 1996; Alexis et al., 2000). On this issue, CASAC noted that "[a]sthmatic subjects appear to be at least as sensitive, if not more sensitive, than non-asthmatic subjects in manifesting O_3-induced pulmonary function decrements" (Frey, 2014c, p. 4). To the extent asthmatics experience larger O_3-induced lung function decrements than the healthy adults used to develop exposure-response relationships, the HREA could underestimate the impacts of O_3 exposures on lung function in asthmatics, including asthmatic children. The implications of this uncertainty for risk estimates remain unknown at this time (U.S. EPA, 2014a, section 6.5.4), and could depend on a variety of factors that have not been well-evaluated, including the severity of asthma and the prevalence of medication use. However, the available evidence shows responses to O_3 increase with severity of asthma (Horstman et al., 1995) and corticosteroid usage does not prevent O_3 effects on lung function decrements or respiratory symptoms in people with asthma (Vagaggini et al., 2001, 2007).

ii. Mortality and Morbidity Risk Assessments

As discussed in section II.C.3.b of the proposal (79 FR 75276), the HREA estimates O_3-

This document is a prepublication version, signed by EPA Administrator, Gina McCarthy on 10/1/2015. We have taken steps to ensure the accuracy of this version, but it is not the official version.

associated risks in 12 urban study areas[62] using concentration-response relationships drawn from epidemiologic studies. These concentration-response relationships are based on "area-wide" average O_3 concentrations.[63] The HREA estimates risks for the years 2007 and 2009 in order to provide estimates of risk for a year with generally higher O_3 concentrations (2007) and a year with generally lower O_3 concentrations (2009) (U.S. EPA, 2014a, section 7.1.1).

In considering the epidemiology-based risk estimates, the proposal focuses on mortality risks associated with short-term O_3 concentrations. The proposal considers estimates of total risk (i.e., based on the full distributions of ambient O_3 concentrations) and estimates of risk associated with O_3 concentrations in the upper portions of ambient distributions. Both estimates are discussed to provide information that considers risk estimates based on concentration-response relationships being linear over the entire distribution of ambient O_3 concentrations, and thus have the greater potential for morbidity and mortality to be affected by changes in relatively low O_3 concentrations, as well as risk estimates that are associated with O_3 concentrations in the upper portions of the ambient distribution, thus focusing on risk from higher O_3 concentrations and placing greater weight on the uncertainty associated with the shapes of concentration-response curves for O_3 concentrations in the lower portions of the distribution. These results for O_3-associated mortality risk are summarized in Table 3 in the proposal (79 FR 75277).

---

[62] The 12 urban areas evaluated are Atlanta, Baltimore, Boston, Cleveland, Denver, Detroit, Houston, Los Angeles, New York, Philadelphia, Sacramento, and St. Louis.

[63] In the epidemiologic studies that provide the health basis for HREA risk assessments, concentration-response relationships are based on daytime O_3 concentrations, averaged across multiple monitors within study areas. These daily averages are used as surrogates for the spatial and temporal patterns of exposures in study populations. Consistent with this approach, the HREA epidemiologic-based risk estimates also utilize daytime O_3 concentrations, averaged across monitors, as surrogates for population exposures. In this notice, we refer to these averaged concentrations as "area-wide" O_3 concentrations. Area-wide concentrations are discussed in more detail in section 3.1.4 of the PA (U.S. EPA, 2014c).

This document is a prepublication version, signed by EPA Administrator, Gina McCarthy on 10/1/2015. We have taken steps to ensure the accuracy of this version, but it is not the official version.

Important uncertainties in epidemiology-based risk estimates, based on their consideration in the HREA and PA, are discussed in section II.C.3.b.ii of the proposal (79 FR 75277). Compared to estimates of O_3 exposures of concern and estimates of O_3-induced lung function decrements (discussed above), the HREA conclusions reflect lower confidence in epidemiologic-based risk estimates (U.S. EPA, 2014a, section 9.6). In particular, the HREA highlights the heterogeneity in effect estimates between locations, the potential for exposure measurement errors, and uncertainty in the interpretation of the shape of concentration-response functions at lower O_3 concentrations (U.S. EPA, 2014a, section 9.6). The HREA also concludes that lower confidence should be placed in the results of the assessment of respiratory mortality risks associated with long-term O_3, primarily because that analysis is based on only one study, though that study is well-designed, and because of the uncertainty in that study about the existence and identification of a potential threshold in the concentration-response function (U.S. EPA, 2014a, section 9.6).[64,65] This section further discusses some of the key uncertainties in epidemiologic-based risk estimates, as summarized in the PA (U.S. EPA, 2014c, section 3.2.3.2), with a focus on uncertainties that can have particularly important implications for the Administrator's consideration of epidemiology-based risk estimates.

The PA notes that reducing NO_X emissions generally reduces O_3-associated mortality and morbidity risk estimates in locations and time periods with relatively high ambient O_3

[64] The CASAC also concluded that "[i]n light of the potential nonlinearity of the C-R function for long-term exposure reflecting a threshold of the mortality response, the estimated number of premature deaths avoidable for long-term exposure reductions for several levels need to be viewed with caution" (Frey, 2014a, p. 3).

[65] There is also uncertainty about the extent to which mortality estimates based on the long-term metric used in the study by Jerrett et al. (2009) (i.e., seasonal average of 1-hour daily maximum concentrations) reflects associations with long-term average O_3 versus repeated occurrences of elevated short-term concentrations.

This document is a prepublication version, signed by EPA Administrator, Gina McCarthy on 10/1/2015. We have taken steps to ensure the accuracy of this version, but it is not the official version.

concentrations and increases risk estimates in locations and time periods with relatively low concentrations (II.A, above). When evaluating uncertainties in epidemiologic risk estimates, the PA considered (1) the extent to which the modeled O_3 response to reductions in NO_X emissions appropriately represents the trends observed in monitored ambient O_3 following actual reductions in NO_X emissions; (2) the extent to which the O_3 response to reductions in precursor emissions could differ with emissions reduction strategies that are different from those used in HREA to generate risk estimates and (3) the extent to which estimated changes in risks in urban study areas are representative of the changes that would be experienced broadly across the U.S. population. The first two of these issues are discussed in section II.A.2.c above. The third issue is discussed below.

The HREA conducted national air quality modeling analyses that estimated the proportion of the U.S. population living in locations where seasonal averages of daily O_3 concentrations are estimated to decrease in response to reductions in NO_X emissions, and the proportion living in locations where such seasonal averages are estimated to increase. Given the close relationship between changes in seasonal averages of daily O_3 concentrations and changes in seasonal mortality and morbidity risk estimates, this analysis informs consideration of the extent to which the risk results in urban study areas represent the U.S. population as a whole. This "representativeness analysis" indicates that the majority of the U.S. population lives in locations where reducing NO_X emissions would be expected to result in decreases in warm season averages of daily maximum 8-hour ambient O_3 concentrations. Because the HREA urban study areas tend to underrepresent the populations living in such areas (e.g., suburban, smaller urban, and rural areas), risk estimates for the urban study areas are likely to understate the average reductions in O_3-associated mortality and morbidity risks that would be experienced

This document is a prepublication version, signed by EPA Administrator, Gina McCarthy on 10/1/2015. We have taken steps to ensure the accuracy of this version, but it is not the official version.

across the U.S. population as a whole upon reducing NO_X emissions (U.S. EPA, 2014a, section 8.2.3.2).

Section 7.4 of the HREA also highlights some additional uncertainties associated with epidemiologic-based risk estimates (U.S. EPA, 2014a). This section of the HREA identifies and discusses sources of uncertainty and presents a qualitative evaluation of key parameters that can introduce uncertainty into risk estimates (U.S. EPA, 2014a, Table 7-4). For several of these parameters, the HREA also presents quantitative sensitivity analyses (U.S. EPA, 2014a, sections 7.4.2 and 7.5.3). Of the uncertainties discussed in Chapter 7 of the HREA, those related to the application of concentration-response functions from epidemiologic studies can have particularly important implications for consideration of epidemiology-based risk estimates, as discussed below.

An important uncertainty is the shape of concentration-response functions at low ambient O_3 concentrations (U.S. EPA, 2014a, Table 7-4).[66] In recognition of the ISA's conclusion that certainty in the shape of O_3 concentration-response functions decreases at low ambient concentrations, the HREA provides estimates of epidemiology-based mortality risks for entire distributions of ambient O_3 concentrations, as well as estimates of total mortality associated with various ambient O_3 concentrations. The PA considers both types of risk estimates, recognizing greater public health concern for adverse O_3-attributable effects at higher ambient O_3 concentrations (which drive higher exposure concentrations, section 3.2.2 of the PA (U.S. EPA, 2014c)), as compared to lower concentrations.

A related consideration is associated with the public health importance of the increases in

[66] A related uncertainty is the existence, or not, of a threshold. The HREA addresses this issue for long-term O_3 by evaluating risks in models that include potential thresholds (II.D.2.c).

This document is a prepublication version, signed by EPA Administrator, Gina McCarthy on 10/1/2015. We have taken steps to ensure the accuracy of this version, but it is not the official version.

relatively low O_3 concentrations following air quality adjustment. There is uncertainty that relates to the assumption that the concentration response function for O_3 is linear, such that total risk estimates are equally influenced by decreasing high concentrations and increasing low concentrations, when the increases and decreases are of equal magnitude. Even on days with increases in relatively low area-wide average concentrations, resulting in increases in estimated risks, some portions of the urban study areas could experience decreases in high O_3 concentrations. To the extent adverse O_3-attributable effects are more strongly supported for higher ambient concentrations (which, as noted above, are consistently reduced upon air quality adjustment), the impacts on risk estimates of increasing low O_3 concentrations reflect an important source of uncertainty. In addition to the uncertainties discussed above, the proposal also notes uncertainties related to (1) using concentration-response relationships developed for a particular population in a particular location to estimate health risks in different populations and locations; (2) using concentration-response functions from epidemiologic studies reflecting a particular air quality distribution to adjusted air quality necessarily reflecting a different (simulated) air quality distribution; (3) using a national concentration-response function to estimate respiratory mortality associated with long-term O_3; and (4) unquantified reductions in risk that could be associated with reductions in the ambient concentrations of pollutants other than O_3, resulting from control of NO_X (79 FR 75277 to 75279).

B. Need for Revision of the Primary Standard

The initial issue to be addressed in the current review of the primary O_3 standard is whether, in view of the advances in scientific knowledge and additional information, it is appropriate to revise the existing standard. This section presents the Administrator's final decision on whether it is "appropriate" to revise the current standard within the meaning of

This document is a prepublication version, signed by EPA Administrator, Gina McCarthy on 10/1/2015. We have taken steps to ensure the accuracy of this version, but it is not the official version.

section 109 (d)(1) of the CAA. Section II.B.1 contains a summary discussion of the basis for the proposed conclusions on the adequacy of the primary standard. Section II.B.2 discusses comments received on the adequacy of the primary standard. Section II.B.3 presents the Administrator's final conclusions on the adequacy of the current primary standard.

1. Basis for Proposed Decision

In evaluating whether it is appropriate to retain or revise the current standard, the Administrator's considerations build upon those in the 2008 review, including consideration of the broader body of scientific evidence and exposure and health risk information now available, as summarized in sections II.A to II.C (79 FR 75246-75279) of the proposal and section II.A above.

In developing conclusions on the adequacy of the current primary O_3 standard, the Administrator takes into account both evidence-based and quantitative exposure- and risk-based considerations. Evidence-based considerations include the assessment of evidence from controlled human exposure, animal toxicological, and epidemiologic studies for a variety of health endpoints. The Administrator focuses on health endpoints for which the evidence is strong enough to support a "causal" or a "likely to be causal" relationship, based on the ISA's integrative synthesis of the entire body of evidence. The Administrator's consideration of quantitative exposure and risk information draws from the results of the exposure and risk assessments presented in the HREA.

The Administrator's consideration of the evidence and exposure/risk information is informed by the considerations and conclusions presented in the PA (U.S. EPA, 2014c). The purpose of the PA is to help "bridge the gap" between the scientific and technical information assessed in the ISA and HREA, and the policy decisions that are required of the Administrator

This document is a prepublication version, signed by EPA Administrator, Gina McCarthy on 10/1/2015. We have taken steps to ensure the accuracy of this version, but it is not the official version.

(U.S. EPA, 2014c, Chapter 1); see also *American Farm Bureau Federation*, 559 F. 3d at 516, 521 ("[a]lthough not required by the statute, in practice EPA staff also develop a Staff Paper, which discusses the information in the Criteria Document that is most relevant to the policy judgments the EPA makes when it sets the NAAQS"). The PA's evidence-based and exposure-/risk-based considerations and conclusions are briefly summarized below in sections II.B.1.a (evidence-based considerations), II.B.1.b (exposure- and risk-based considerations), and II.B.1.c (PA conclusions on the current standard). Section II.B.1.d summarizes CASAC advice to the Administrator and public commenter views on the current standard. Section II.B.1.e presents a summary of the Administrator's proposed conclusions concerning the adequacy of the public health protection provided by the current standard, and her proposed decision to revise that standard.

a. Evidence-Based Considerations from the PA

In considering the available scientific evidence, the PA evaluates the O_3 concentrations in health effects studies (U.S. EPA, 2014c, section 3.1.4). Specifically, the PA characterizes the extent to which health effects have been reported for the O_3 exposure concentrations evaluated in controlled human exposure studies, and effects occurring over the distributions of ambient O_3 concentrations in locations where epidemiologic studies have been conducted. These considerations, as they relate to the adequacy of the current standard, are presented in detail in section 3.1.4 of the PA (U.S. EPA, 2014c) and are summarized in the proposal (79 FR 75279-75287). The PA's considerations are summarized briefly below for controlled human exposure, epidemiologic panel studies, and epidemiologic population-based studies.

Section II.D.1.a of the proposal discusses the PA's consideration of the evidence from controlled human exposure and panel studies. This evidence is assessed in section 6.2 of the ISA

This document is a prepublication version, signed by EPA Administrator, Gina McCarthy on 10/1/2015. We have taken steps to ensure the accuracy of this version, but it is not the official version.

(U.S. EPA, 2013) and is summarized in section 3.1.2 of the PA (U.S. EPA, 2014c). A large number of controlled human exposure studies have reported lung function decrements, respiratory symptoms, air inflammation, airway hyperresponsiveness, and/or impaired lung host defense in young, healthy adults engaged in moderate quasi-continuous exertion, following 6.6-hour O_3 exposures. These studies have consistently reported such effects following exposures to O_3 concentrations of 80 ppb or greater. In addition to lung function decrements, available studies have evaluated respiratory symptoms or airway inflammation following exposures to O_3 concentrations below 75 ppb. Table 3-1 in the PA highlights the group mean results of individual controlled human exposure studies that evaluated exposures to O_3 concentrations below 75 ppb. These studies observe the combination of lung function decrements and respiratory symptoms following exposures to O_3 concentrations as low as 72 ppb, and lung function decrements and airway inflammation following exposures to O_3 concentrations as low as 60 ppb (based on group means).

Based on this evidence, the PA notes that controlled human exposure studies have reported a variety of respiratory effects in young, healthy adults following exposures to a wide range of O_3 concentrations for 6.6 hours, including exposures to concentrations below 75 ppb. In particular, the PA further notes that a recent controlled human exposure study reported the combination of lung function decrements and respiratory symptoms in healthy adults engaged in quasi-continuous, moderate exertion following 6.6 hour exposures to 72 ppb O_3, a combination of effects that have been classified as adverse based on ATS guidelines for adversity (ATS, 2000a). In addition, a recent study has also reported lung function decrements and pulmonary inflammation following exposure to 60 ppb O_3. Sixty ppb is the lowest exposure concentration for which inflammation has been evaluated and reported to occur, and corresponds to the lowest

This document is a prepublication version, signed by EPA Administrator, Gina McCarthy on 10/1/2015. We have taken steps to ensure the accuracy of this version, but it is not the official version.

exposure concentration demonstrated to result in lung function decrements large enough to be judged an abnormal response by ATS (ATS, 2000b). The PA also notes, and CASAC agreed, that these controlled human exposure studies were conducted in healthy adults, while at-risk groups (e.g., children, people with asthma) could experience larger and/or more serious effects. Therefore, the PA concludes that the evidence from controlled human exposure studies provide support that the respiratory effects experienced following exposures to O_3 concentrations lower than 75 ppb would be adverse in some individuals, particularly if experienced by members of at-risk populations (e.g., people with asthma, children).

The PA also notes consistent results in some panel studies of O_3-associated lung function decrements. In particular, the PA notes that epidemiologic panel studies in children and adults consistently indicate O_3-associated lung function decrements when on-site, ambient monitored concentrations were below 75 ppb (although the evidence becomes less consistent at low O_3 concentrations, and the averaging periods involved ranged from 10 minutes to 12 hours (U.S. EPA, 2014c, section 3.2.4.2)).

Section II.D.1.b of the proposal summarizes the PA's analyses of monitored O_3 concentrations in locations of epidemiologic studies. While the majority of the epidemiologic study areas evaluated would have violated the current standard during study periods, the PA makes the following observations with regard to health effect associations at O_3 concentrations likely to have met the current standard:

(1) A single-city study reported positive and statistically significant associations with asthma emergency department visits in children and adults in Seattle, a location that would have met the current standard over the entire study period (Mar and Koenig, 2009).

(2) Additional single-city studies support associations with respiratory morbidity at relatively

This document is a prepublication version, signed by EPA Administrator, Gina McCarthy on 10/1/2015. We have taken steps to ensure the accuracy of this version, but it is not the official version.

low ambient O_3 concentrations, including when virtually all monitored concentrations were below the level of the current standard (Silverman and Ito, 2010; Strickland et al., 2010).

(3) Canadian multicity studies reported positive and statistically significant associations with respiratory morbidity or mortality when the majority of study cities, though not all study cities, would have met the current standard over the study period in each of these studies (Cakmak et al., 2006; Dales et al., 2006; Katsouyanni et al., 2009; Stieb et al., 2009).

(4) A U.S. multicity study reported positive and statistically significant associations with mortality when ambient O_3 concentrations were restricted to those likely to have met the current O_3 standard (Bell et al., 2006).

The PA also takes into account important uncertainties in these analyses of air quality in locations of epidemiologic study areas. These uncertainties are summarized in section II.D.1.b.iii of the proposal. Briefly, they include the following: (1) uncertainty in conclusions about the extent to which multicity effect estimates reflect associations with air quality meeting the current standard, versus air quality violating that standard; (2) uncertainty regarding the potential for thresholds to exist, given that regional heterogeneity in O_3 health effect associations could obscure the presence of thresholds, should they exist; (3) uncertainty in the extent to which the PA appropriately recreated the air quality analyses in the published study by Bell et al. (2006); and (4) uncertainty in the extent to which reported health effects are caused by exposures to O_3 itself, as opposed to other factors such as co-occurring pollutants or pollutant mixtures,

This document is a prepublication version, signed by EPA Administrator, Gina McCarthy on 10/1/2015. We have taken steps to ensure the accuracy of this version, but it is not the official version.

particularly at low ambient O_3 concentrations.[67]

In considering the analyses of monitored O_3 air quality in locations of epidemiologic studies, as well as the important uncertainties in these analyses, the PA concludes that these analyses provide support for the occurrence of morbidity and mortality associated with short-term ambient O_3 concentrations likely to meet the current O_3 standard.[68] In considering the evidence as a whole, the PA concludes that (1) controlled human exposure studies provide strong support for the occurrence of adverse respiratory effects following exposures to O_3 concentrations below the level of the current standard and (2) epidemiologic studies provide support for the occurrence of adverse respiratory effects and mortality under air quality conditions that would meet the current standard.

b. Exposure- and Risk-Based Considerations in the PA

In order to further inform judgments about the potential public health implications of the current O_3 NAAQS, the PA considers the exposure and risk assessments presented in the HREA (U.S. EPA, 2014c, section 3.2). Overviews of these exposure and risk assessments, including brief summaries of key results and uncertainties, are provided in section II.A.2 above. Section II.D.2 of the proposal summarizes key observations from the PA related to the adequacy of the current O_3 NAAQS, based on consideration of the HREA exposure assessment, lung function

[67] As noted above (section II.A.1.B.i), the ISA concludes that studies that examined the potential confounding effects of copollutants found that O_3 effect estimates remained relatively robust upon the inclusion of PM and gaseous pollutants in two-pollutant models (U.S. EPA, 2013, section 6.2.7.5).

[68] Unlike for the studies of short-term O_3, the available U.S. and Canadian epidemiologic studies evaluating long-term ambient O_3 concentration metrics have not been conducted in locations likely to have met the current 8-hour O_3 standard during the study period, and have not reported concentration-response functions that indicate confidence in health effect associations at O_3 concentrations meeting the current standard (U.S. EPA, 2014c, section 3.1.4.3).

This document is a prepublication version, signed by EPA Administrator, Gina McCarthy on 10/1/2015. We have taken steps to ensure the accuracy of this version, but it is not the official version.

risk assessment, and mortality/morbidity risk assessments (79 FR 75283).

Section II.D.2.a of the proposal summarizes key observations from the PA regarding estimates of O_3 exposures of concern (79 FR 75283). Given the evidence for respiratory effects from controlled human exposure studies, the PA considers the extent to which the current standard would be estimated to protect at-risk populations against exposures of concern to O_3 concentrations at or above the health benchmark concentrations of 60, 70, and 80 ppb (i.e., based on HREA estimates of one or more and two or more exposures of concern). In doing so, the PA notes the CASAC conclusion that (Frey, 2014c, p. 6):

> The 80 ppb-8hr benchmark level represents an exposure level for which there is substantial clinical evidence demonstrating a range of ozone-related effects including lung inflammation and airway responsiveness in healthy individuals. The 70 ppb-8hr benchmark level reflects the fact that in healthy subjects, decreases in lung function and respiratory symptoms occur at concentrations as low as 72 ppb and that these effects almost certainly occur in some people, including asthmatics and others with low lung function who are less tolerant of such effects, at levels of 70 ppb and below. The 60 ppb-8hr benchmark level represents the lowest exposure level at which ozone-related effects have been observed in clinical studies of healthy individuals.

For exposures of concern at or above 60 ppb, the proposal highlights the following key observations for air quality adjusted to just meet the current standard:

(1) On average over the years 2006 to 2010, the current standard is estimated to allow approximately 10 to 18% of children in urban study areas to experience one or more exposures of concern at or above 60 ppb. Summing across urban study areas, these percentages correspond to almost 2.5 million children experiencing approximately 4

This document is a prepublication version, signed by EPA Administrator, Gina McCarthy on 10/1/2015. We have taken steps to ensure the accuracy of this version, but it is not the official version.

million exposures of concern at or above 60 ppb during a single O_3 season. Of these children, almost 250,000 are asthmatics.[69]

(2) On average over the years 2006 to 2010, the current standard is estimated to allow approximately 3 to 8% of children in urban study areas to experience two or more exposures of concern to O_3 concentrations at or above 60 ppb. Summing across the urban study areas, these percentages correspond to almost 900,000 children (including almost 90,000 asthmatic children).

(3) In the worst-case years (i.e., those with the largest exposure estimates), the current standard is estimated to allow approximately 10 to 25% of children to experience one or more exposures of concern at or above 60 ppb, and approximately 4 to 14% to experience two or more exposures of concern at or above 60 ppb.

For exposures of concern at or above 70 ppb, the PA highlights the following key observations for air quality adjusted to just meet the current standard:

(1) On average over the years 2006 to 2010, the current standard is estimated to allow up to approximately 3% of children in urban study areas to experience one or more exposures of concern at or above 70 ppb. Summing across urban study areas, almost 400,000 children (including almost 40,000 asthmatic children) are estimated to experience O_3 exposure concentrations at or above 70 ppb during a single O_3 season.

[69] As discussed in section II.C.2.b of the proposal, due to variability in responsiveness, only a subset of individuals who experience exposures at or above a benchmark concentration can be expected to experience adverse health effects.

This document is a prepublication version, signed by EPA Administrator, Gina McCarthy on 10/1/2015. We have taken steps to ensure the accuracy of this version, but it is not the official version.

(2) On average over the years 2006 to 2010, the current standard is estimated to allow less than 1% of children in urban study areas to experience two or more exposures of concern to O_3 concentrations at or above 70 ppb.

(3) In the worst-case location and year, the current standard is estimated to allow approximately 8% of children to experience one or more exposures of concern at or above 70 ppb, and approximately 2% to experience two or more exposures of concern, at or above 70 ppb.

For exposures of concern at or above 80 ppb, the PA highlights the observation that the current standard is estimated to allow about 1% or fewer children in urban study areas to experience exposures of concern at or above 80 ppb, even in years with the highest exposure estimates.

Uncertainties in exposure estimates are summarized in section II.C.2.b of the proposal (79 FR 75273), and discussed more fully in the HREA (U.S. EPA, 2014a, section 5.5.2) and the PA (U.S. EPA, 2014c, section 3.2.2). Key uncertainties include the variability in responsiveness following O_3 exposures, resulting in only a subset of exposed individuals experiencing health effects, adverse or otherwise, and the limited evidence from controlled human exposure studies conducted in at-risk populations. In addition, there are a number of uncertainties in the exposure modelling approach used in the HREA, contributing to overall uncertainty in exposure estimates.

Section II.D.2.b of the proposal summarizes key observations from the PA regarding the estimated risk of O_3-induced lung function decrements (79 FR 75283 to 75284). With respect to the lung function decrements that have been evaluated in controlled human exposure studies, the PA considers the extent to which standards with revised levels would be estimated to protect healthy and at-risk populations against one or more, and two or more, moderate (i.e., FEV_1 decrements ≥ 10% and ≥ 15%) and large (i.e., FEV_1 decrements ≥ 20%) lung function

This document is a prepublication version, signed by EPA Administrator, Gina McCarthy on 10/1/2015. We have taken steps to ensure the accuracy of this version, but it is not the official version.

decrements. As discussed in section 3.1.3 of the PA (U.S. EPA, 2014c), although some experts would judge single occurrences of moderate responses to be a nuisance, especially for healthy individuals, a more general consensus view of the adversity of moderate lung function decrements emerges as the frequency of occurrence increases.

With regard to decrements ≥ 10%, the PA highlights the following key observations for air quality adjusted to just meet the current standard:

(1) On average over the years 2006 to 2010, the current standard is estimated to allow approximately 14 to 19% of children in urban study areas to experience one or more lung function decrements ≥ 10%. Summing across urban study areas, this corresponds to approximately 3 million children experiencing 15 million O_3-induced lung function decrements ≥ 10% during a single O_3 season. Of these children, about 300,000 are asthmatics.

(2) On average over the years 2006 to 2010, the current standard is estimated to allow approximately 7 to 12% of children in urban study areas to experience two or more O_3-induced lung function decrements ≥ 10%. Summing across the urban study areas, this corresponds to almost 2 million children (including almost 200,000 asthmatic children) estimated to experience two or more O_3-induced lung function decrements greater than 10% during a single O_3 season.

(3) In the worst-case years, the current standard is estimated to allow approximately 17 to 23% of children in urban study areas to experience one or more lung function decrements ≥ 10%, and approximately 10 to 14% to experience two or more O_3-induced lung function decrements ≥ 10%.

With regard to decrements ≥ 15%, the PA highlights the following key observations for air

This document is a prepublication version, signed by EPA Administrator, Gina McCarthy on 10/1/2015. We have taken steps to ensure the accuracy of this version, but it is not the official version.

quality adjusted to just meet the current standard:

(1) On average over the years 2006 to 2010, the current standard is estimated to allow approximately 3 to 5% of children in urban study areas to experience one or more lung function decrements ≥ 15%. Summing across urban study areas, this corresponds to approximately 800,000 children (including approximately 80,000 asthmatic children) estimated to experience at least one O_3-induced lung function decrement ≥ 15% during a single O_3 season.

(2) On average over the years 2006 to 2010, the current standard is estimated to allow approximately 2 to 3% of children in urban study areas to experience two or more O_3-induced lung function decrements ≥ 15%.

(3) In the worst-case years, the current standard is estimated to allow approximately 4 to 6% of children in urban study areas to experience one or more lung function decrements ≥ 15%, and approximately 2 to 4% to experience two or more O_3-induced lung function decrements ≥ 15%.

With regard to decrements ≥ 20%, the PA highlights the following key observations for air quality adjusted to just meet the current standard:

(1) On average over the years 2006 to 2010, the current standard is estimated to allow approximately 1 to 2% of children in urban study areas to experience one or more lung function decrements ≥ 20%. Summing across urban study areas, this corresponds to approximately 300,000 children (including approximately 30,000 asthmatic children) estimated to experience at least one O_3-induced lung function decrement ≥ 20% during a single O_3 season.

This document is a prepublication version, signed by EPA Administrator, Gina McCarthy on 10/1/2015. We have taken steps to ensure the accuracy of this version, but it is not the official version.

(2) On average over the years 2006 to 2010, the current standard is estimated to allow less than 1% of children in urban study areas to experience two or more O_3-induced lung function decrements $\geq$ 20%.

(3) In the worst-case years, the current standard is estimated to allow approximately 2 to 3% of children to experience one or more lung function decrements $\geq$ 20%, and less than 2% to experience two or more O_3-induced lung function decrements $\geq$ 20%.

Uncertainties in lung function risk estimates are summarized in section II.C.3.a of the proposal, and discussed more fully in the HREA (U.S. EPA, 2014a, section 6.5) and the PA (U.S. EPA, 2014c, section 3.2.3.1). In addition to the uncertainties noted above for exposure estimates, the key uncertainties associated with estimates of O_3-induced lung function decrements include the paucity of exposure-response information in children and in people with asthma.

Section II.D.2.c of the proposal summarizes key observations from the PA regarding risk estimates of O_3-associated mortality and morbidity (79 FR 75284 to 75285). With regard to total mortality or morbidity associated with short-term O_3, the PA notes the following for air quality adjusted to just meet the current standard:

(1) When air quality was adjusted to the current standard for the 2007 model year (the year with generally "higher" O_3-associated risks), 10 of 12 urban study areas exhibited either decreases or virtually no change in estimates of the number of O_3-associated deaths (U.S.

This document is a prepublication version, signed by EPA Administrator, Gina McCarthy on 10/1/2015. We have taken steps to ensure the accuracy of this version, but it is not the official version.

EPA, 2014a, Appendix 7B). Increases were estimated in two of the urban study areas (Houston, Los Angeles)[70] (U.S. EPA, 2014a, Appendix 7B).[71]

(2) In focusing on total risk, the current standard is estimated to allow thousands of O_3-associated deaths per year in the urban study areas. In focusing on the risks associated with the upper portions of distributions of ambient concentrations (area-wide concentrations $\geq$ 40, 60 ppb), the current standard is estimated to allow hundreds to thousands of O_3-associated deaths per year in the urban study areas.

(3) The current standard is estimated to allow tens to thousands of O_3-associated morbidity events per year (i.e., respiratory-related hospital admissions, emergency department visits, and asthma exacerbations).

With regard to respiratory mortality associated with long-term O_3, the PA notes the following for

---

[70] As discussed above (II.C.1), in locations and time periods when NO_X is predominantly contributing to O_3 formation (e.g., downwind of important NO_X sources, where the highest O_3 concentrations often occur), model-based adjustment to the current and alternative standards decreases estimated ambient O_3 concentrations compared to recent monitored concentrations (U.S. EPA, 2014a, section 4.3.3.2). In contrast, in locations and time periods when NO_X is predominantly contributing to O_3 titration (e.g., in urban centers with high concentrations of NO_X emissions, where ambient O_3 concentrations are often suppressed and are thus relatively low), model-based adjustment increases ambient O_3 concentrations compared to recent monitored concentrations (U.S. EPA, 2014a, section 4.3.3.2). Changes in epidemiology-based risk estimates depend on the balance between the daily decreases in high O_3 concentrations and increases in low O_3 concentrations following the model-based air quality adjustment. Commenting on this issue, CASAC noted that "controls designed to reduce the peak levels of ozone (e.g., the 4th highest annual MDA8) may not be effective at reducing lower levels of ozone on more typical days and may actually increase ozone levels on days where ozone concentrations are low" (Frey 2014a, p. 2). CASAC further noted that risk results "suggest that the ozone-related health risks in the urban cores can increase for some of the cities as ozone NAAQS alternatives become more stringent. This is because reductions in nitrogen oxides emissions can lead to less scavenging of ozone and free radicals, resulting in locally higher levels of ozone" (Frey 2014c, p. 10).

[71] For the 2009 adjusted year (i.e., the year with generally lower O_3 concentrations), changes in risk were generally smaller than in 2007 (i.e., most changes about 2% or smaller). Increases were estimated for Houston, Los Angeles, and New York City.

This document is a prepublication version, signed by EPA Administrator, Gina McCarthy on 10/1/2015. We have taken steps to ensure the accuracy of this version, but it is not the official version.

air quality adjusted to just meet the current standard:

(1) Based on a linear concentration-response function, the current standard is estimated to allow thousands of O_3-associated respiratory deaths per year in the urban study areas.

(2) Based on threshold models, HREA sensitivity analyses indicate that the number of respiratory deaths associated with long-term O_3 concentrations could potentially be considerably lower (i.e., by more than 75% if a threshold exists at 40 ppb, and by about 98% if a threshold exists at 56 ppb) (U.S. EPA, 2014a, Figure 7-9).[72]

Compared to the weight given to HREA estimates of exposures of concern and lung function risks, and the weight given to the evidence, the PA places relatively less weight on epidemiologic-based risk estimates. In doing so, the PA notes that the overall conclusions from the HREA likewise reflect less confidence in estimates of epidemiologic-based risks than in estimates of exposures and lung function risks. The determination to attach less weight to the epidemiologic-based estimates reflects the uncertainties associated with mortality and morbidity risk estimates, including the heterogeneity in effect estimates between locations, the potential for exposure measurement errors, and uncertainty in the interpretation of the shape of concentration-response functions at lower O_3 concentrations (U.S. EPA, 2014a, section 9.6).

Uncertainty in the shape of concentration-response functions at lower O_3 concentrations

[72] Risk estimates for respiratory mortality associated with long-term O_3 exposures are based on the study by Jerrett et al. (2009) (U.S. EPA, 2014a, Chapter 7). As discussed above (II.B.2.b.iv) and in the PA (U.S. EPA, 2014c, section 3.1.4.3), Jerrett et al. (2009) reported that when seasonal averages of 1-hour daily maximum O_3 concentrations ranged from 33 to 104 ppb, there was no statistical deviation from a linear concentration-response relationship between O_3 and respiratory mortality across 96 U.S. cities (U.S. EPA, 2013, section 7.7). However, the authors reported "limited evidence" for an effect threshold at an O_3 concentration of 56 ppb ($p=0.06$). In communications with EPA staff (Sasser, 2014), the study authors indicated that it is not clear whether a threshold model is a better predictor of respiratory mortality than the linear model, and that "considerable caution should be exercised in accepting any specific threshold."

This document is a prepublication version, signed by EPA Administrator, Gina McCarthy on 10/1/2015. We have taken steps to ensure the accuracy of this version, but it is not the official version.

is particularly important to interpreting risk estimates given the approach used to adjust air quality to just meet the current standard, and potential alternative standards, and the resulting compression in the air quality distributions (i.e., decreasing high concentrations and increasing low concentrations) (II.A.2.a, above). Total risk estimates in the HREA are based on the assumption that the concentration response function for O_3 is linear, such that total risk estimates are equally influenced by decreasing high concentrations and increasing low concentrations, when the increases and decreases are of equal magnitude. However, consistent with the PA's consideration of risk estimates, in the proposal the Administrator notes that the overall body of evidence provides stronger support for the occurrence of O_3-attributable health effects following exposures to O_3 concentrations corresponding to the upper ends of typical ambient distributions (II.E.4.d of the proposal). In addition, even on days with increases in relatively low area-wide average concentrations, resulting in increases in estimated risks, some portions of the urban study areas could experience decreases in high O_3 concentrations. Therefore, to the extent adverse O_3-attributable effects are more strongly supported for higher ambient concentrations (which, as noted above, are consistently reduced upon air quality adjustment), the PA notes that the impacts on risk estimates of increasing low O_3 concentrations reflect an important source of uncertainty.

c. PA Conclusions on the Current Standard

Section II.D.3 of the proposal summarizes the PA conclusions on the adequacy of the existing primary O_3 standard (79 FR 75285). As an initial matter, the PA concludes that reducing precursor emissions to achieve O_3 concentrations that meet the current standard will provide important improvements in public health protection. This initial conclusion is based on (1) the strong body of scientific evidence indicating a wide range of adverse health outcomes

This document is a prepublication version, signed by EPA Administrator, Gina McCarthy on 10/1/2015. We have taken steps to ensure the accuracy of this version, but it is not the official version.

attributable to exposures to O_3 concentrations commonly found in the ambient air and (2) estimates indicating decreased occurrences of O_3 exposures of concern and decreased health risks upon meeting the current standard, compared to recent air quality.

In particular, the PA concludes that strong support for this initial conclusion is provided by controlled human exposure studies of respiratory effects, and by quantitative estimates of exposures of concern and lung function decrements based on information in these studies. Analyses in the HREA estimate that the percentages of children (i.e., all children and children with asthma) in urban study areas experiencing exposures of concern, or experiencing abnormal and potentially adverse lung function decrements, are consistently lower for air quality that just meets the current O_3 standard than for recent air quality. The HREA estimates such reductions consistently across the urban study areas evaluated and throughout various portions of individual urban study areas, including in urban cores and the portions of urban study areas surrounding urban cores. These reductions in exposures of concern and O_3-induced lung function decrements reflect the consistent decreases in the highest O_3 concentrations following reductions in precursor emissions to meet the current standard. Thus, populations in both urban and non-urban areas would be expected to experience important reductions in O_3 exposures and O_3-induced lung function risks upon meeting the current standard.

The PA further concludes that support for this initial conclusion is also provided by estimates of O_3-associated mortality and morbidity based on application of concentration-response relationships from epidemiologic studies to air quality adjusted to just meet the current standard. These estimates are based on the assumption that concentration-response relationships are linear over entire distributions of ambient O_3 concentrations, an assumption which has uncertainties that complicate interpretation of these estimates (II.A.2.c.ii). However, risk

This document is a prepublication version, signed by EPA Administrator, Gina McCarthy on 10/1/2015. We have taken steps to ensure the accuracy of this version, but it is not the official version.

estimates for effects associated with short- and long-term O_3 exposures, combined with the HREA's national analysis of O_3 responsiveness to reductions in precursor emissions and the consistent reductions estimated for the highest ambient O_3 concentrations, suggest that O_3-associated mortality and morbidity would be expected to decrease nationwide following reductions in precursor emissions to meet the current O_3 standard.

After reaching the initial conclusion that meeting the current primary O_3 standard will provide important improvements in public health protection, and that it is not appropriate to consider a standard that is less protective than the current standard, the PA considers the adequacy of the public health protection that is provided by the current standard. In considering the available scientific evidence, exposure/risk information, advice from CASAC (II.D.4, below), and input from the public, the PA reaches the conclusion that the available evidence and information clearly call into question the adequacy of public health protection provided by the current primary standard. In reaching this conclusion, the PA notes that evidence from controlled human exposure studies provides strong support for the occurrence of adverse respiratory effects following exposures to O_3 concentrations below the level of the current standard. Epidemiologic studies provide support for the occurrence of adverse respiratory effects and mortality under air quality conditions that would likely meet the current standard. In addition, based on the analyses in the HREA, the PA concludes that the exposures and risks projected to remain upon meeting the current standard are indicative of risks that can reasonably be judged to be important from a public health perspective. Thus, the PA concludes that the evidence and information provide strong support for giving consideration to revising the current primary standard in order to provide increased public health protection against an array of adverse health effects that range from decreased lung function and respiratory symptoms to more serious indicators of morbidity

This document is a prepublication version, signed by EPA Administrator, Gina McCarthy on 10/1/2015. We have taken steps to ensure the accuracy of this version, but it is not the official version.

(e.g., including emergency department visits and hospital admissions), and mortality. In consideration of all of the above, the PA draws the conclusion that it is appropriate for the Administrator to consider revision of the current primary O_3 standard to provide increased public health protection.

d. CASAC Advice

Section II.D.4 of the proposal summarizes CASAC advice regarding the adequacy of the existing primary O_3 standard. Following the 2008 decision to revise the primary O_3 standard by setting the level at 0.075 ppm (75 ppb), CASAC strongly questioned whether the standard met the requirements of the CAA. In September 2009, the EPA announced its intention to reconsider the 2008 standards, issuing a notice of proposed rulemaking in January 2010 (75 FR 2938). Soon after, the EPA solicited CASAC review of that proposed rule and in January 2011, solicited additional advice. This proposal was based on the scientific and technical record from the 2008 rulemaking, including public comments and CASAC advice and recommendations. As further described above (I.D), in the fall of 2011, the EPA did not revise the standard as part of the reconsideration process but decided to defer decisions on revisions to the O_3 standards to the next periodic review, which was already underway. Accordingly, in this section we describe CASAC's advice related to the 2008 final decision and the subsequent reconsideration, as well as its advice on this current review of the O_3 NAAQS that was initiated in September 2008.

In April 2008, the members of the CASAC Ozone Review Panel sent a letter to EPA stating "[I]n our most-recent letters to you on this subject—dated October 2006 and March 2007—the CASAC unanimously recommended selection of an 8-hour average Ozone NAAQS within the range of 0.060 to 0.070 parts per million [60 to 70 ppb] for the primary (human health-based) Ozone NAAQS" (Henderson, 2008). In 2010, in response to the EPA's solicitation

This document is a prepublication version, signed by EPA Administrator, Gina McCarthy on 10/1/2015. We have taken steps to ensure the accuracy of this version, but it is not the official version.

of advice on the EPA's proposed rulemaking as part of the reconsideration, CASAC again stated that the current standard should be revised to provide additional protection to the public health (Samet, 2010):

> CASAC fully supports EPA's proposed range of 0.060 – 0.070 parts per million (ppm) for the 8-hour primary ozone standard. CASAC considers this range to be justified by the scientific evidence as presented in the Air Quality Criteria for Ozone and Related Photochemical Oxidants (March 2006) and Review of the National Ambient Air Quality Standards for Ozone: Policy Assessment of Scientific and Technical Information, OAQPS Staff Paper (July 2007). As stated in our letters of October 24, 2006, March 26, 2007 and April 7, 2008 to former Administrator Stephen L. Johnson, CASAC unanimously recommended selection of an 8-hour average ozone NAAQS within the range proposed by EPA (0.060 to 0.070 ppm). In proposing this range, EPA has recognized the large body of data and risk analyses demonstrating that retention of the current standard would leave large numbers of individuals at risk for respiratory effects and/or other significant health impacts including asthma exacerbations, emergency room visits, hospital admissions and mortality.

In response to the EPA's request for additional advice on the reconsideration in 2011, CASAC reaffirmed their conclusion that "the evidence from controlled human and epidemiological studies strongly supports the selection of a new primary ozone standard within the 60 – 70 ppb range for an 8-hour averaging time" (Samet, 2011, p ii). As requested by the EPA, CASAC's advice and recommendations were based on the scientific and technical record from the 2008 rulemaking. In considering the record for the 2008 rulemaking, CASAC stated the following to summarize the basis for their conclusions (Samet, 2011, pp. ii to iii):

(1) The evidence available on dose-response for effects of O_3 shows associations extending to levels within the range of concentrations currently experienced in the United States.

This document is a prepublication version, signed by EPA Administrator, Gina McCarthy on 10/1/2015. We have taken steps to ensure the accuracy of this version, but it is not the official version.

(2) There is scientific certainty that 6.6-hour exposures with exercise of young, healthy, non-smoking adult volunteers to concentrations ≥ 80 ppb cause clinically relevant decrements of lung function.

(3) Some healthy individuals have been shown to have clinically relevant responses, even at 60 ppb.

(4) Since the majority of clinical studies involve young, healthy adult populations, less is known about health effects in such potentially ozone sensitive populations as the elderly, children and those with cardiopulmonary disease. For these susceptible groups, decrements in lung function may be greater than in healthy volunteers and are likely to have a greater clinical significance.

(5) Children and adults with asthma are at increased risk of acute exacerbations on or shortly after days when elevated O_3 concentrations occur, even when exposures do not exceed the NAAQS concentration of 75 ppb.

(6) Large segments of the population fall into what the EPA terms a "sensitive population group,'' i.e., those at increased risk because they are more intrinsically susceptible (children, the elderly, and individuals with chronic lung disease) and those who are more vulnerable due to increased exposure because they work outside or live in areas that are more polluted than the mean levels in their communities.

With respect to evidence from epidemiologic studies, CASAC stated "while epidemiological studies are inherently more uncertain as exposures and risk estimates decrease (due to the greater potential for biases to dominate small effect estimates), specific evidence in the literature does not suggest that our confidence on the specific attribution of the estimated effects of ozone on

This document is a prepublication version, signed by EPA Administrator, Gina McCarthy on 10/1/2015. We have taken steps to ensure the accuracy of this version, but it is not the official version.

health outcomes differs over the proposed range of 60-70 ppb" (Samet, 2011, p. 10).

Following its review of the second draft PA in the current review, which considers an updated scientific and technical record since the 2008 rulemaking, CASAC concluded that "there is clear scientific support for the need to revise the standard" (Frey, 2014c, p. ii). In particular, CASAC noted the following (Frey, 2014c, p. 5):

> [T]he scientific evidence provides strong support for the occurrence of a range of adverse respiratory effects and mortality under air quality conditions that would meet the current standard. Therefore, CASAC unanimously recommends that the Administrator revise the current primary ozone standard to protect public health.[73]

In supporting these conclusions, CASAC judged that the strongest evidence comes from controlled human exposure studies of respiratory effects. The Committee specifically noted that "the combination of decrements in FEV_1 together with the statistically significant alterations in symptoms in human subjects exposed to 72 ppb ozone meets the American Thoracic Society's definition of an adverse health effect" (Frey, 2014c, p. 5). CASAC further judged that "if subjects had been exposed to ozone using the 8-hour averaging period used in the standard, adverse effects could have occurred at lower concentration" and that "the level at which adverse effects might be observed would likely be lower for more sensitive subgroups, such as those with asthma" (Frey, 2014c, p. 5). With regard to 60 ppb exposures, CASAC noted that "a level of 60 ppb corresponds to the lowest exposure concentration demonstrated to result in lung function decrements large enough to be judged an abnormal response by ATS and that could be adverse in individuals with lung disease" (Frey, 2014c, p. 7). The CASAC further noted that "a level of 60 ppb also corresponds to the lowest exposure concentration at which pulmonary inflammation has

[73] CASAC provided similar advice in their letter to the Administrator on the HREA, stating that "The CASAC finds that the current primary NAAQS for ozone is not protective of human health and needs to be revised" (Frey, 2014a, p. 15).

This document is a prepublication version, signed by EPA Administrator, Gina McCarthy on 10/1/2015. We have taken steps to ensure the accuracy of this version, but it is not the official version.

been reported" (Frey, 2014c, p. 7).

In their advice, CASAC also took note of estimates of O_3 exposures of concern and the risk of O_3-induced lung function decrements. With regard to the benchmark concentrations used in estimating exposures of concern, CASAC stated the following (Frey, 2014c, p. 6):

> The 80 ppb-8hr benchmark level represents an exposure level for which there is substantial clinical evidence demonstrating a range of ozone-related effects including lung inflammation and airway responsiveness in healthy individuals. The 70 ppb-8hr benchmark level reflects the fact that in healthy subjects, decreases in lung function and respiratory symptoms occur at concentrations as low as 72 ppb and that these effects almost certainly occur in some people, including asthmatics and others with low lung function who are less tolerant of such effects, at levels of 70 ppb and below. The 60 ppb-8hr benchmark level represents the lowest exposure level at which ozone-related effects have been observed in clinical studies of healthy individuals. Based on its scientific judgment, the CASAC finds that the 60 ppb-8hr exposure benchmark is relevant for consideration with respect to adverse effects on asthmatics.

With regard to lung function risk estimates, CASAC concluded that "estimation of FEV_1 decrements of ≥15% is appropriate as a scientifically relevant surrogate for adverse health outcomes in active healthy adults, whereas an FEV_1 decrement of ≥10% is a scientifically relevant surrogate for adverse health outcomes for people with asthma and lung disease" (Frey, 2014c, p. 3). The Committee further concluded that "[a]sthmatic subjects appear to be at least as sensitive, if not more sensitive, than non-asthmatic subjects in manifesting O_3-induced pulmonary function decrements" (Frey, 2014c, p. 4).

Although CASAC judged that controlled human exposure studies of respiratory effects provide the strongest evidence supporting their conclusion on the current standard, the Committee judged that there is also "sufficient scientific evidence based on epidemiologic studies for mortality and morbidity associated with short-term exposure to ozone at the level of the current standard" (Frey, 2014c, p. 5) and noted that "[r]ecent animal toxicological studies support

This document is a prepublication version, signed by EPA Administrator, Gina McCarthy on 10/1/2015. We have taken steps to ensure the accuracy of this version, but it is not the official version.

identification of modes of action and, therefore, the biological plausibility associated with the epidemiological findings" (Frey, 2014c, p. 5).

e. Administrator's Proposed Decision

Section II.D.5 in the proposal (79 FR 75287-75291) discusses the Administrator's proposed conclusions related to the adequacy of the public health protection provided by the current primary O_3 standard, resulting in her proposed decision to revise that standard. These proposed conclusions and her proposed decision, summarized below, were based on the Administrator's consideration of the available scientific evidence, exposure/risk information, the comments and advice of CASAC, and public input that had been received by the time of proposal.

As an initial matter, the Administrator concluded that reducing precursor emissions to achieve O_3 concentrations that meet the current primary O_3 standard will provide important improvements in public health protection, compared to recent air quality. In reaching this initial conclusion, she noted the discussion in section 3.4 of the PA (U.S. EPA, 2014c). In particular, the Administrator noted that this initial conclusion is supported by (1) the strong body of scientific evidence indicating a wide range of adverse health outcomes attributable to exposures to O_3 concentrations commonly measured in the ambient air and (2) estimates indicating decreased occurrences of O_3 exposures of concern and decreased O_3-associated health risks upon meeting the current standard, compared to recent air quality. Thus, she concluded that it would not be appropriate in this review to consider a standard that is less protective than the current

This document is a prepublication version, signed by EPA Administrator, Gina McCarthy on 10/1/2015. We have taken steps to ensure the accuracy of this version, but it is not the official version.

standard.[74]

After reaching the initial conclusion that meeting the current primary O_3 standard will provide important improvements in public health protection, and that it is not appropriate to consider a standard that is less protective than the current standard, the Administrator next considered the adequacy of the public health protection that is provided by the current standard. In doing so, the Administrator first noted that studies evaluated since the completion of the 2006 AQCD support and expand upon the strong body of evidence that, in the last review, indicated a causal relationship between short-term O_3 exposures and respiratory health effects, the strongest determination under the ISA's hierarchical system for classifying weight of evidence for causation. Together, experimental and epidemiologic studies support conclusions regarding a continuum of O_3 respiratory effects ranging from small reversible changes in pulmonary function, and pulmonary inflammation, to more serious effects that can result in respiratory-related emergency department visits, hospital admissions, and premature mortality. The Administrator further noted that recent animal toxicology studies support descriptions of modes of action for these respiratory effects and provide support for biological plausibility for the role of O_3 in reported effects. With regard to mode of action, evidence indicates that antioxidant capacity may modify the risk of respiratory morbidity associated with O_3 exposure, and that the inherent capacity to quench (based on individual antioxidant capacity) can be overwhelmed,

[74] Although the Administrator noted that reductions in O_3 precursor emissions (e.g., NO_X; VOC) to achieve O_3 concentrations that meet the current standard could also increase public health protection by reducing the ambient concentrations of pollutants other than O_3 (e.g., $PM_{2.5}$, NO_2), we did not quantitatively analyze these effects, consistent with CASAC advice (Frey, 2014a, p.10). However, the Administrator is not setting the standard to address risks from pollutants other than O_3.

This document is a prepublication version, signed by EPA Administrator, Gina McCarthy on 10/1/2015. We have taken steps to ensure the accuracy of this version, but it is not the official version.

especially with exposure to elevated concentrations of O_3. In addition, based on the consistency of findings across studies and evidence for the coherence of results from different scientific disciplines, evidence indicates that certain populations are at increased risk of experiencing O_3-related effects, including the most severe effects. These include populations and lifestages identified in previous reviews (i.e., people with asthma, children, older adults, outdoor workers) and populations identified since the last review (i.e., people with certain genotypes related to antioxidant and/or anti-inflammatory status; people with reduced intake of certain antioxidant nutrients, such as Vitamins C and E).

The Administrator further noted that evidence for adverse respiratory health effects attributable to long-term[75] O_3 exposures is much stronger than in previous reviews, and noted the ISA's conclusion that there is "likely to be" a causal relationship between such O_3 exposures and adverse respiratory health effects (the second strongest causality determination). She noted that the evidence available in this review includes new epidemiologic studies using a variety of designs and analysis methods, conducted by different research groups in different locations, evaluating the relationships between long-term O_3 exposures and measures of respiratory morbidity and mortality. New evidence supports associations between long-term O_3 exposures and the development of asthma in children, with several studies reporting interactions between genetic variants and such O_3 exposures. Studies also report associations between long-term O_3 exposures and asthma prevalence, asthma severity and control, respiratory symptoms among asthmatics, and respiratory mortality.

[75] Based on the exposure surrogates used in recent epidemiologic studies of long-term O_3 exposure, it is not possible to distinguish between the impacts of long-term O_3 exposure and exposure to repeated short-term peaks over an O_3 season.

This document is a prepublication version, signed by EPA Administrator, Gina McCarthy on 10/1/2015. We have taken steps to ensure the accuracy of this version, but it is not the official version.

In considering the O_3 exposure concentrations reported to elicit respiratory effects, the Administrator agreed with the conclusions of the PA and with the advice of CASAC (Frey, 2014c) that controlled human exposure studies provide the most certain evidence indicating the occurrence of health effects in humans following exposures to specific O_3 concentrations. In particular, she noted that the effects reported in controlled human exposure studies are due solely to O_3 exposures, and interpretation of study results is not complicated by the presence of co-occurring pollutants or pollutant mixtures.

In considering the evidence from controlled human exposure studies, the Administrator first noted that these studies have reported a variety of respiratory effects in healthy adults following exposures to O_3 concentrations of 60, 72, or 80 ppb, and higher. The largest respiratory effects, and the broadest range of effects, have been studied and reported following exposures of healthy adults to 80 ppb O_3 or higher, with most exposure studies conducted at these higher concentrations. She further noted that recent evidence includes controlled human exposure studies reporting the combination of lung function decrements and respiratory symptoms in healthy adults engaged in quasi-continuous, moderate exertion following 6.6 hour exposures to concentrations as low as 72 ppb, and lung function decrements and pulmonary inflammation following exposures to O_3 concentrations as low as 60 ppb. As discussed below, compared to the evidence available in the last review, the Administrator viewed these studies as having strengthened support for the occurrence of abnormal and adverse respiratory effects attributable to short-term exposures to O_3 concentrations below the level of the current standard. The Administrator stated that such exposures to O_3 concentrations below the level of the current standard are potentially important from a public health perspective, given the following:

This document is a prepublication version, signed by EPA Administrator, Gina McCarthy on 10/1/2015. We have taken steps to ensure the accuracy of this version, but it is not the official version.

(1) The combination of lung function decrements and respiratory symptoms reported to occur in healthy adults following exposures to 72 ppb O_3 or higher, while at moderate exertion, meet ATS criteria for an adverse response. In specifically considering the 72 ppb exposure concentration, CASAC noted that "the combination of decrements in FEV_1 together with the statistically significant alterations in symptoms in human subjects exposed to 72 ppb ozone meets the American Thoracic Society's definition of an adverse health effect" (Frey, 2014c, p. 5).

(2) With regard to 60 ppb O_3, CASAC agreed that "a level of 60 ppb corresponds to the lowest exposure concentration demonstrated to result in lung function decrements large enough to be judged an abnormal response by ATS and that could be adverse in individuals with lung disease" (Frey, 2014c, p. 7). CASAC further noted that "a level of 60 ppb also corresponds to the lowest exposure concentration at which pulmonary inflammation has been reported" (Frey, 2014c, p. 7).

(3) The controlled human exposure studies reporting these respiratory effects were conducted in healthy adults, while at-risk groups (e.g., children, people with asthma) could experience larger and/or more serious effects. In their advice to the Administrator, CASAC concurred with this reasoning (Frey, 2014a, p. 14; Frey, 2014c, p. 5).

(4) These respiratory effects are coherent with the serious health outcomes that have been reported in epidemiologic studies evaluating exposure to O_3 (e.g., respiratory-related hospital admissions, emergency department visits, and mortality).

As noted above, the Administrator's proposed conclusions regarding the adequacy of the current primary O_3 standard placed a large amount of weight on the results of controlled human exposure studies. In particular, given the combination of lung function decrements and

This document is a prepublication version, signed by EPA Administrator, Gina McCarthy on 10/1/2015. We have taken steps to ensure the accuracy of this version, but it is not the official version.

respiratory symptoms following 6.6-hour exposures to O_3 concentrations as low as 72 ppb, and given CASAC advice regarding effects at 72 ppb, along with ATS adversity criteria, she concluded that the evidence in this review supports the occurrence of adverse respiratory effects following exposures to O_3 concentrations lower than the level of the current standard.[76] As discussed below, the Administrator further considered information from the broader body of controlled human exposure studies within the context of quantitative estimates of exposures of concern and O_3-induced FEV_1 decrements.

While putting less weight on information from epidemiologic studies than on information from controlled human exposure studies, the Administrator also considered what the available epidemiologic evidence indicates with regard to the adequacy of the public health protection provided by the current primary O_3 standard. She noted that recent epidemiologic studies provide support, beyond that available in the last review, for associations between short-term O_3 exposures and a wide range of adverse respiratory outcomes (including respiratory-related hospital admissions, emergency department visits, and mortality) and with total mortality. Associations with morbidity and mortality are stronger during the warm or summer months, and remain robust after adjustment for copollutants.

In considering information from epidemiologic studies within the context of her conclusions on the adequacy of the current standard, the Administrator considered the extent to which available studies support the occurrence of O_3 health effect associations with air quality likely to be allowed by the current standard. Most of the epidemiologic studies considered by the Administrator were conducted in locations likely to have violated the current standard over at

[76] This CASAC advice and ATS recommendations are discussed in more detail in section II.C.4 below (see also II.A.1.c, above).

This document is a prepublication version, signed by EPA Administrator, Gina McCarthy on 10/1/2015. We have taken steps to ensure the accuracy of this version, but it is not the official version.

least part of the study period. However, she noted three U.S. single-city studies that support the occurrence of O_3-associated hospital admissions or emergency department visits at ambient O_3 concentrations below the level of the current standard, or when virtually all monitored concentrations were below the level of the current standard (Mar and Koenig, 2009; Silverman and Ito, 2010; Strickland et al., 2010) (section II.D.1 of the proposal). While the Administrator acknowledged greater uncertainty in interpreting air quality for multicity studies, she noted that O_3 associations with respiratory morbidity or mortality have been reported when the majority of study locations (though not all study locations) would likely have met the current O_3 standard. When taken together, the Administrator reached the initial conclusion at proposal that single-city epidemiologic studies and associated air quality information support the occurrence of O_3-associated hospital admissions and emergency department visits for ambient O_3 concentrations likely to have met the current standard, and that air quality analyses in locations of multicity studies provide some support for this conclusion for a broader range of effects, including mortality.

Beyond her consideration of the scientific evidence, the Administrator also considered the results of the HREA exposure and risk analyses in reaching initial conclusions regarding the adequacy of the current primary O_3 standard. In doing so, as noted above, she focused primarily on exposure and risk estimates based on information from controlled human exposure studies (i.e., exposures of concern and O_3-induced lung function decrements) and placed relatively less weight on epidemiologic-based risk estimates.

With regard to estimates of exposures of concern, the Administrator considered the extent to which the current standard provides protection against exposures to O_3 concentrations at or above 60, 70, and 80 ppb. Consistent with CASAC advice (Frey, 2014c), the Administrator

This document is a prepublication version, signed by EPA Administrator, Gina McCarthy on 10/1/2015. We have taken steps to ensure the accuracy of this version, but it is not the official version.

focused on children in these analyses of O_3 exposures, noting that estimates for all children and asthmatic children are virtually indistinguishable, in terms of the percent estimated to experience exposures of concern.[77] Though she focused on children, she also recognized that exposures to O_3 concentrations at or above 60 or 70 ppb could be of concern for adults. As discussed in the HREA and PA (and II.C.2.a of the proposal), the patterns of exposure estimates across urban study areas, across years, and across air quality scenarios are similar in adults with asthma, older adults, all children, and children with asthma, though smaller percentages of adult populations are estimated to experience exposures of concern than children and children with asthma. Thus, the Administrator recognized that the exposure patterns for children across years, urban study areas, and air quality scenarios are indicative of the exposure patterns in a broader group of at-risk populations that also includes asthmatic adults and older adults.

She further noted that while single exposures of concern could be adverse for some people, particularly for the higher benchmark concentrations (70, 80 ppb) where there is stronger evidence for the occurrence of adverse effects, she became increasingly concerned about the potential for adverse responses as the number of occurrences increases (61 FR 75122).[78] In particular, she noted that repeated occurrences of the types of effects shown to occur following exposures of concern can have potentially adverse outcomes. For example, repeated occurrences of airway inflammation could potentially result in the induction of a chronic inflammatory state;

[77] As noted above, HREA analyses indicate that activity data for asthmatics is generally similar to non-asthmatics (U.S. EPA, 2014a, Appendix 5G, Tables 5G2-to 5G-5).

[78] The Administrator noted that not all people who experience an exposure of concern will experience an adverse effect (even members of at-risk populations). For most of the endpoints evaluated in controlled human exposure studies (with the exception of O_3-induced FEV_1 decrements, as discussed below), the number of those experiencing exposures of concern who will experience adverse effects cannot be reliably quantified.

This document is a prepublication version, signed by EPA Administrator, Gina McCarthy on 10/1/2015. We have taken steps to ensure the accuracy of this version, but it is not the official version.

altered pulmonary structure and function, leading to diseases such as asthma; altered lung host defense response to inhaled microorganisms; and altered lung response to other agents such as allergens or toxins (U.S. EPA, 2013, section 6.2.3). Thus, the Administrator noted that the types of respiratory effects shown to occur in some individuals following exposures to O_3 concentrations from 60 to 80 ppb, particularly if experienced repeatedly, provide a mode of action by which O_3 may cause other more serious effects (e.g., asthma exacerbations). Therefore, the Administrator placed the most weight on estimates of two or more exposures of concern (i.e., as a surrogate for the occurrence of repeated exposures), though she also considered estimates of one or more, particularly for the 70 and 80 ppb benchmarks.[79]

As illustrated in Table 1 (above), the Administrator noted that if the 15 urban study areas evaluated in the HREA were to just meet the current O_3 standard, fewer than 1% of children in those areas would be estimated to experience two or more exposures of concern at or above 70 ppb, though approximately 3 to 8% of children, including approximately 3 to 8% of asthmatic children, would be estimated to experience two or more exposures of concern to O_3 concentrations at or above 60 ppb[80] (based on estimates averaged over the years of analysis). To provide some perspective on these percentages, the Administrator noted that they correspond to almost 900,000 children in urban study areas, including about 90,000 asthmatic children, estimated to experience two or more exposures of concern at or above 60 ppb. Nationally, if the current standard were to be just met, the number of children experiencing such exposures would

[79] The Administrator's considerations related to estimated O_3 exposures of concern, including her views on estimates of two or more and one or more such exposures, are discussed in more detail within the context of her consideration of public comments on the level of the revised standard and her final decision on level (II.C.4.b and II.C.4.c, below).
[80] Almost no children in those areas would be estimated to experience two or more exposures of concern at or above 80 ppb.

This document is a prepublication version, signed by EPA Administrator, Gina McCarthy on 10/1/2015. We have taken steps to ensure the accuracy of this version, but it is not the official version.

be larger. In the worst-case year and location (i.e., year and location with the largest exposure estimates), the Administrator noted that over 2% of children are estimated to experience two or more exposures of concern at or above 70 ppb and over 14% are estimated to experience two or more exposures of concern at or above 60 ppb.

Although, as discussed above and in section II.E.4.d of the proposal, the Administrator was less concerned about single occurrences of exposures of concern, she noted that even single occurrences can cause adverse effects in some people, particularly for the 70 and 80 ppb benchmarks. Therefore, she also considered estimates of one or more exposures of concern. As illustrated in Table 1 (above), if the 15 urban study areas evaluated in the HREA were to just meet the current O_3 standard, fewer than 1% of children in those areas would be estimated to experience one or more exposures of concern at or above 80 ppb (based on estimates averaged over the years of analysis). However, approximately 1 to 3% of children, including 1 to 3% of asthmatic children, would be estimated to experience one or more exposures of concern to O_3 concentrations at or above 70 ppb and approximately 10 to 17% would be estimated to experience one or more exposures of concern to O_3 concentrations at or above 60 ppb. In the worst-case year and location, the Administrator noted that over 1% of children are estimated to experience one or more exposures of concern at or above 80 ppb, over 8% are estimated to experience one or more exposures of concern at or above 70 ppb, and about 26% are estimated to experience one or more exposures of concern at or above 60 ppb.

In addition to estimated exposures of concern, the Administrator also considered HREA estimates of the occurrence of O_3-induced lung function decrements. In doing so, she particularly noted CASAC advice that "estimation of FEV_1 decrements of $\geq$ 15% is appropriate as a scientifically relevant surrogate for adverse health outcomes in active healthy adults, whereas an

This document is a prepublication version, signed by EPA Administrator, Gina McCarthy on 10/1/2015. We have taken steps to ensure the accuracy of this version, but it is not the official version.

FEV_1 decrement of ≥ 10% is a scientifically relevant surrogate for adverse health outcomes for people with asthma and lung disease" (Frey, 2014c, p. 3). While these surrogates provide perspective on the potential for the occurrence of adverse respiratory effects following O_3 exposures, the Administrator agreed with the conclusion in past reviews that a more general consensus view of the adversity of moderate responses emerges as the frequency of occurrence increases (citing to 61 FR 65722-3) (Dec, 13, 1996). Therefore, in the proposal the Administrator expressed increasing concern about the potential for adversity as the frequency of occurrences increased and, as a result, she focused primarily on estimates of two or more O_3-induced FEV_1 decrements (i.e., as a surrogate for repeated exposures).

When averaged over the years evaluated in the HREA, the Administrator noted that the current standard is estimated to allow about 1 to 3% of children in the 15 urban study areas (corresponding to almost 400,000 children) to experience two or more O_3-induced lung function decrements ≥ 15%, and to allow about 8 to 12% of children (corresponding to about 180,000 asthmatic children) to experience two or more O_3-induced lung function decrements ≥ 10%. Nationally, larger numbers of children would be expected to experience such O_3-induced decrements if the current standard were to be just met. The current standard is also estimated to allow about 3 to 5% of children in the urban study areas to experience one or more decrements ≥ 15% and about 14 to 19% of children to experience one or more decrements ≥ 10%. In the worst-case year and location, the current standard is estimated to allow 4% of children in the urban study areas to experience two or more decrements ≥ 15% (and 7% to experience one or more such decrements) and 14% of children to experience two or more decrements ≥ 10% (and 22% to

This document is a prepublication version, signed by EPA Administrator, Gina McCarthy on 10/1/2015. We have taken steps to ensure the accuracy of this version, but it is not the official version.

experience one or more such decrements).[81]

In further considering the HREA results, the Administrator considered the epidemiology-based risk estimates. Compared to the weight given to HREA estimates of exposures of concern and lung function risks, she placed relatively less weight on epidemiology-based risk estimates. Consistent with the conclusions in the PA, her determination to attach less weight to the epidemiologic-based risk estimates reflected her consideration of key uncertainties, including the heterogeneity in effect estimates between locations, the potential for exposure measurement errors, and uncertainty in the interpretation of the shape of concentration-response functions for O_3 concentrations in the lower portions of ambient distributions (U.S. EPA, 2014a, section 9.6) (section II.D.2 of the proposal).

The Administrator focused on estimates of total mortality risk associated with short-term O_3 exposures.[82] Given the decreasing certainty in the shape of concentration-response functions for area-wide O_3 concentrations at the lower ends of warm season distributions (U.S. EPA, 2013, section 2.5.4.4), the Administrator focused on estimates of risk associated with O_3 concentrations

[81] As discussed below (II.C.4), in her consideration of potential alternative standard levels, the Administrator placed less weight on estimates of the risk of O_3-induced FEV_1 decrements. In doing so, she particularly noted that, unlike exposures of concern, the variability in lung function risk estimates across urban study areas is often greater than the differences in risk estimates between various standard levels (Table 2, above). Given this, and the resulting considerable overlap between the ranges of lung function risk estimates for different standard levels, although the Administrator noted her confidence in the lung function risk estimates themselves, she viewed them as providing a more limited basis than exposures of concern for distinguishing between the degree of public health protection provided by alternative standard levels.

[82] In doing so, she concluded that lower confidence should be placed in the results of the assessment of respiratory mortality risks associated with long-term O_3 exposures, primarily because that analysis is based on only one study (even though that study is well-designed) and because of the uncertainty in that study about the existence and identification of a potential threshold in the concentration-response function (U.S. EPA, 2014a, section 9.6) (section II.D.2 of the proposal). CASAC also called into question the extent to which it is appropriate to place confidence in risk estimates for respiratory mortality (Frey, 2014a, p. 11).

This document is a prepublication version, signed by EPA Administrator, Gina McCarthy on 10/1/2015. We have taken steps to ensure the accuracy of this version, but it is not the official version.

in the upper portions of ambient distributions. Even when considering only area-wide O_3 concentrations from these upper portions of seasonal distributions, the Administrator noted that the current standard is estimated to allow hundreds to thousands of O_3-associated deaths per year in urban study areas (79 FR 75291 citing to section II.C.3 of the proposal).

In addition to the evidence and exposure/risk information discussed above, the Administrator took note of the CASAC advice in the current review and in the 2010 proposed reconsideration of the 2008 decision establishing the current standard. As discussed in more detail above, the current CASAC "finds that the current NAAQS for ozone is not protective of human health" and "unanimously recommends that the Administrator revise the current primary ozone standard to protect public health" (Frey, 2014c, p. 5).

In consideration of all of the above, the Administrator proposed that the current primary O_3 standard is not adequate to protect public health, and that it should be revised to provide increased public health protection. This proposed decision was based on the Administrator's initial conclusions that the available evidence and exposure and risk information clearly call into question the adequacy of public health protection provided by the current primary standard and, therefore, that the current standard is not requisite to protect public health with an adequate margin of safety. With regard to the evidence, she specifically noted that (1) controlled human exposure studies provide support for the occurrence of adverse respiratory effects following exposures to O_3 concentrations below the level of the current standard (i.e., as low as 72 ppb), and that (2) single-city epidemiologic studies provide support for the occurrence of adverse respiratory effects under air quality conditions that would likely meet the current standard, with multicity studies providing limited support for this conclusion for a broader range of effects (i.e., including mortality). In addition, based on the analyses in the HREA, the Administrator

This document is a prepublication version, signed by EPA Administrator, Gina McCarthy on 10/1/2015. We have taken steps to ensure the accuracy of this version, but it is not the official version.

concluded that the exposures and risks projected to remain upon meeting the current standard can reasonably be judged to be important from a public health perspective. Thus, she reached the proposed conclusion that the evidence and information, together with CASAC advice based on their consideration of that evidence and information, provide strong support for revising the current primary standard in order to increase public health protection against an array of adverse effects that range from decreased lung function and respiratory symptoms to more serious indicators of morbidity (e.g., including emergency department visits and hospital admissions), and mortality.

2. Comments on the Need for Revision

The EPA received a large number of comments, more than 430,000 comments, on the proposed decision to revise the current primary O_3 standard. These comments generally fell into one of two broad groups that expressed sharply divergent views.

Many commenters asserted that the current primary O_3 standard is not sufficient to protect public health, especially the health of sensitive groups, with an adequate margin of safety. These commenters agreed with the EPA's proposed decision to revise the current standard to increase public health protection. Among those calling for revisions to the current primary standard were medical groups (e.g., American Academy of Pediatrics (AAP), American Medical Association, American Lung Association (ALA), American Thoracic Society , American Heart Association, and the American College of Occupational and Environmental Medicine); national, state, and local public health and environmental organizations (e.g., the National Association of County and City Health Officials, American Public Health Association, Physicians for Social Responsibility, Sierra Club, Natural Resources Defense Council, Environmental Defense Fund, Center for Biological Diversity, and Earthjustice); the majority of

This document is a prepublication version, signed by EPA Administrator, Gina McCarthy on 10/1/2015. We have taken steps to ensure the accuracy of this version, but it is not the official version.

state and local air pollution control authorities that submitted comments (e.g., agencies from California Air Resources Board and Office of Environmental Health Hazard Assessment , Connecticut, Delaware, Iowa, Illinois, Maryland, Minnesota, New Hampshire, New York, North Dakota, Oregon, Pennsylvania, Tennessee, and Wisconsin); the National Tribal Air Association; State organizations (e.g., National Association of Clean Air Agencies (NACAA), Northeast States for Coordinated Air Use Management, Ozone Transport Commission). While all of these commenters agreed with the EPA that the current O_3 standard needs to be revised, many supported a more protective standard than proposed by EPA, as discussed in more detail below (II.C.4). Many individual commenters also expressed similar views.

A second group of commenters, representing industry associations, businesses and some state agencies, opposed the proposed decision to revise the current primary O_3 standard, expressing the view that the current standard is adequate to protect public health, including the health of sensitive groups, and to do so with an adequate margin of safety. Industry and business groups expressing this view included the American Petroleum Institute (API), the Alliance of Automobile Manufacturers (AAM), the American Forest and Paper Association, the Dow Chemical Company, the National Association of Manufacturers, the National Mining Association, the U.S. Chamber of Commerce (in a joint comment with other industry groups), and the Utility Air Regulatory Group (UARG). State environmental agencies opposed to revising the current primary O_3 standard included agencies from Arkansas, Georgia, Louisiana, Kansas, Michigan, Mississippi, Nebraska, North Carolina, Ohio, Texas, Virginia, and West Virginia.

The following sections discuss comments submitted by these and other groups, and the EPA's responses to those comments. Comments dealing with overarching issues that are fundamental to EPA's decision-making methodology are addressed in section II.B.2.a.

This document is a prepublication version, signed by EPA Administrator, Gina McCarthy on 10/1/2015. We have taken steps to ensure the accuracy of this version, but it is not the official version.

Comments on the health effects evidence, including evidence from controlled human exposure and epidemiologic studies, are addressed in section II.B.2.b. Comments on human exposure and health risk assessments are addressed in section II.B.2.c. Comments on the appropriate indicator, averaging time, form, or level of a revised primary O_3 standard are addressed below in section II.C. In addition to the comments addressed in this preamble, the EPA has prepared a Response to Comments document that addresses other specific comments related to standard setting, as well as comments on implementation- and/or cost-related factors that the EPA may not consider as part of the basis for decisions on the NAAQS. This document is available for review in the docket for this rulemaking and through the EPA's OAQPS TTN web site (http://www.epa.gov/ttn/naaqs/standards/ozone/s_o3_index.html).

a. Overarching Comments

Some commenters maintained that the proposed rule (and by extension the final rule) is fundamentally flawed because it does not quantify, or otherwise define, what level of protection is "requisite" to protect the public health. These commenters asserted that "EPA has not explained how far above zero-risk it believes is appropriate or how close to background is acceptable. EPA has failed to explain how the current standard is inadequate on this specific basis" (e.g., UARG, p. 10). These commenters further maintained that the failure to quantify a requisite level of protection "drastically reduces the value of public participation" since "the public does not understand what is driving EPA's decision" (e.g., UARG, p. 11).

The EPA disagrees with these comments and notes that industry petitioners made virtually the same argument before the D.C. Circuit in *ATA III*, on remand from the Supreme Court, arguing that unless EPA identifies and quantifies a degree of acceptable risk, it is impossible to determine if a NAAQS is requisite (i.e., neither too stringent or insufficiently

This document is a prepublication version, signed by EPA Administrator, Gina McCarthy on 10/1/2015. We have taken steps to ensure the accuracy of this version, but it is not the official version.

stringent to protect the public health). The D.C. Circuit rejected petitioners' argument, holding that "[a]lthough we recognize that the Clean Air Act and circuit precedent require EPA qualitatively to describe the standard governing its selection of particular NAAQS, we have expressly rejected the notion that the Agency must 'establish a measure of the risk to safety it considers adequate to protect public health every time it establish a [NAAQS]'" *ATA III*, 283 F. 3d at 369 (quoting *NRDC v. EPA*, 902 F.2d 962, 973 (DC Cir. 1990)). The court went on to explain that the requirement is only for EPA to engage in reasoned decision-making, "not that it definitively identify pollutant levels below which risks to public health are negligible." *ATA III*, 283 F. 3d at 370.

Thus, the Administrator is required to exercise her judgment in the face of scientific uncertainty to establish the NAAQS to provide appropriate protection against risks to public health, both known and unknown. As discussed below, in the current review, the Administrator judges that the existing primary O_3 standard is not requisite to protect public health with an adequate margin of safety, a judgment that is consistent with CASAC's conclusion that "there is clear scientific support for the need to revise the standard" (Frey, 2014c, p. ii). Further, in section II.C.4 below, the Administrator has provided a thorough explanation of her rationale for concluding that a standard with a level of 70 ppb is requisite to protect public health with an adequate margin of safety, explaining the various scientific uncertainties which circumscribe the range of potential alternative standards, and how she exercised her "judgment" (per section 109 (b)(1) of the CAA) in selecting a standard from within that range of scientifically reasonable choices. This "reasoned decision making" is what the Act requires, 283 F. 3d at 370, not the quantification advocated by these commenters.

The EPA further disagrees with the comment that a failure to quantify a requisite level of

This document is a prepublication version, signed by EPA Administrator, Gina McCarthy on 10/1/2015. We have taken steps to ensure the accuracy of this version, but it is not the official version.

protection impaired or impeded public notice and comment opportunities. In fact, the EPA clearly gave adequate notice of the bases both for determining that the current standard does not afford requisite protection,[83] and for determining how the standard should be revised. In particular, the EPA explained in detail which evidence it considered critical, and the scientific uncertainties that could cause the Administrator to weight that evidence in various ways (79 FR 75308-75310). There were robust comments submitted by commenters from a range of viewpoints on all of these issues, an indication of the adequacy of notice. The public was also afforded multiple opportunities to comment to the EPA and to CASAC during the development of the ISA, REA, and PA. Thus, the EPA does not agree that lack of quantification of a risk level that is "requisite" has deprived commenters of adequate notice and opportunity to comment in this proceeding.

Various commenters maintained that it was inappropriate to revise the current NAAQS based on their view that natural background concentrations in several states are at or above O_3 concentrations associated with meeting a NAAQS set at a level less than 75 ppb (presumably retaining the same indicator, form, and averaging time), making the NAAQS impossible for those states to attain and maintain, a result they claim is legally impermissible. In support for their argument, the commenters cite monitoring and modelling results from various areas in the intermountain west, state that EPA analyses provide underestimates of background O_3 and

[83] See 79 FR 75287-91 (noting, among other things, that exposure to ambient O_3 concentrations below the level of the current standard has been associated with diminished lung function capacity, respiratory symptoms, and respiratory health effects resulting in emergency room visits or hospital admissions, and that a single-city epidemiologic study showed associations with asthma emergency department visits in an area that would have met the current standard over the entire study period). See also Frey 2014c, p. 5 (CASAC reiterated its conclusion, after multiple public comment opportunities, that as a matter of science the current standard "is not protective of public health" and provided the bases for that conclusion).

This document is a prepublication version, signed by EPA Administrator, Gina McCarthy on 10/1/2015. We have taken steps to ensure the accuracy of this version, but it is not the official version.

conclude that high concentrations of background O_3[84] exist in many parts of the United States that will "prevent attainment" of a revised standard (NMA, p. 5).

The courts have clearly established that "[a]ttainability and technological feasibility are not relevant considerations in the promulgation of [NAAQS]." *API v. EPA*, 665 F. 2d 1176, 1185 (D.C. Cir. 1981). Further, the courts have clarified that the EPA may consider proximity to background concentrations as a factor in the decision whether and how to revise the NAAQS only in the context of considering standard levels within the range of reasonable values supported by the air quality criteria and judgments of the Administrator. 79 FR 75242-43 (citing *ATA III*, 283 F. 3d at 379). In this review, the overall body of scientific evidence and exposure/risk information, as discussed in Section II.B of this notice, is clear and convincing: the existing standard is not adequate to protect public health with an adequate margin of safety and that the standard needs to be revised to reflect a lower level to provide that protection. The EPA analyses indicate that there may be infrequent instances in a limited number of rural areas where background O_3 would be appreciable but not the sole contributor to an exceedance of the revised NAAQS, but do not indicate U.S. background (USB) O_3 concentrations will prevent attainment of a revised O_3 standard with a level of 70 ppb. USB is defined as that O_3 that would exist even in the absence of any manmade emissions within the United States.

[84] Background O_3 can be generically defined as the portion of O_3 in ambient air that comes from sources outside the jurisdiction of an area and can include natural sources as well as transported O_3 of anthropogenic origin. EPA has identified two specific definitions of background O_3 relevant to this discussion: natural background (NB) and United States background (USB). NB is defined as the O_3 that would exist in the absence of any manmade precursor emissions. USB is defined as that O_3 that would exist in the absence of any manmade emissions inside the U.S. This includes anthropogenic emissions outside the U.S. as well as naturally occurring ozone. In many cases, the comments reference background O_3 only in the generic sense. Unless explicitly noted otherwise, we have assumed all references to background in the comments are intended to refer to USB.

This document is a prepublication version, signed by EPA Administrator, Gina McCarthy on 10/1/2015. We have taken steps to ensure the accuracy of this version, but it is not the official version.

The EPA's estimates of U.S. background ozone concentrations are based on frequently-utilized, state-of-the-science air quality models and are considered reasonable and reliable, not underestimates. In support of their view, the commenters state that monitored (not modelled) ozone concentrations in remote rural locations include instances of 8-hour average concentrations very occasionally higher than 70 ppb. Monitoring data from places like the Grand Canyon and Yellowstone National Parks, are examples cited in comments. It is inappropriate to assume that monitored O_3 concentrations at remote sites can be used as a proxy for background O_3. Even at the most remote locations, local O_3 concentrations are impacted by anthropogenic emissions from within the U.S. The EPA modeling analyses (U.S. EPA, 2014c, Figure 2-18) estimate that, on a seasonal basis, 10-20% of the O_3 at even the most remote locations in the intermountain western U.S. originates from manmade emissions from the U.S., and thus is not part of USB. This conclusion is supported by commenter-submitted recent data analyses of rural O_3 observations in Nevada and Utah (NMA, Appendices D and H). These analyses conclude that natural sources, international O_3 transport, O_3 transported from upwind states, and O_3 transported from urban areas within a state all contributed to O_3 concentrations at rural sites.[85] Thus, while O_3 in high-altitude, rural portions of the intermountain western U.S. can, at times, be substantially influenced by background sources such as wildfires, international transport or the stratosphere, measured O_3 in rural locations are also influenced by domestic emissions and so cannot, by themselves, be used to estimate USB concentrations. Accordingly,

[85] The analysis of observations in Utah notes the influence of domestic emissions – either from Salt Lake City (for two of the areas) or from Los Angeles and California (for the third of the areas) – on O_3 concentrations at each of the locations included (NMA comments, Appendix E). Additionally, the analysis of monitoring data for Nevada also describes the influence of the monitoring sites by domestic emissions from other western states (NMA, Appendix H).

This document is a prepublication version, signed by EPA Administrator, Gina McCarthy on 10/1/2015. We have taken steps to ensure the accuracy of this version, but it is not the official version.

the fact that 2011-2013 design values in locations like Yellowstone National Park (66 ppb) or Grand Canyon National Park (72 ppb) approach or exceed 70 ppb, does not support the conclusion that a standard with a level of 70 ppb is impossible to attain.

To accurately estimate USB concentrations, it is necessary to use air quality models which can estimate how much of the O_3 at any given location originates from sources other than manmade emissions within the U.S. As part of the rulemaking, the EPA has summarized a variety of modeling-based analyses of background O_3 (U.S. EPA, 2013a, Chapter 3) and conducted our own multi-model assessment of USB concentrations across the U.S. (U.S. EPA, 2014c, Chapter 2). The EPA analyses, which are consistent with the previously-summarized studies highlighted by commenters, concluded that seasonal mean daily maximum 8-hour average concentrations of USB O_3 range from 25-50 ppb, with the highest estimates located across the intermountain western U.S.

Importantly, the modeling analyses also indicate that the highest O_3 days (i.e., the days most relevant to the form of the NAAQS) generally have similar daily maximum 8-hour average USB concentrations as the seasonal means of this metric, but have larger contributions from U.S. anthropogenic sources. As summarized in the PA, "the highest modeled O_3 site-days tend to have background O_3 levels similar to mid-range O_3 days … [T]he days with highest O_3 levels have similar distributions (i.e. means, inter-quartile ranges) of background levels as days with lower values, down to approximately 40 ppb. *As a result, the proportion of total O_3 that has background origins is smaller on high O_3 days (e.g. greater than 60 ppb) than on the more common lower O_3 days that tend to drive seasonal means*" (U.S. EPA, 2014c, p. 2-21, emphasis added). When averaged over the entire U.S., the models estimate that the mean USB fractional contribution to daily maximum 8-hour average O_3 concentrations above 70 ppb is less than 35

This document is a prepublication version, signed by EPA Administrator, Gina McCarthy on 10/1/2015. We have taken steps to ensure the accuracy of this version, but it is not the official version.

percent. U.S. anthropogenic emission sources are thus the dominant contributor to the majority of modeled O_3 exceedances across the U.S. (U.S. EPA, 2014c, Figures 2-14 and 2-15).

As noted in the PA, and as highlighted by the commenters based on existing modeling, there can be infrequent events where daily maximum 8-hour O_3 concentrations approach or exceed 70 ppb largely due to the influence of USB sources like a wildfire or stratospheric intrusion. As discussed below in Section V, the statute and EPA implementing regulations allow for the exclusion of air quality monitoring data from design value calculations when there are exceedances caused by certain event-related U.S. background influences (e.g., wildfires or stratospheric intrusions). As a result, these "exceptional events" will not factor into attainability concerns.

In sum, the EPA believes that the commenters have failed to establish the predicate for their argument. Uncontrollable background concentrations of O_3 are not expected to preclude attainment of a revised O_3 standard with a level of 70 ppb. The EPA also disagrees with aspects of the specific statements made by the commenters as support for their view that the EPA analyses have underestimated background O_3.[86] Thus, even assuming the commenters are correct that the EPA may use proximity to background as a justification for not revising a standard that, in the judgment of the Administrator, is inadequate to protect public health, the commenters' arguments for the justification and need to do so for this review are based on a flawed premise.

b. Comments on the Health Effects Evidence

As noted above, comments on the adequacy of the current standard fell into two broad

[86] Specific aspects of the comments on the EPA analyses are addressed in more detail in the RTC.

This document is a prepublication version, signed by EPA Administrator, Gina McCarthy on 10/1/2015. We have taken steps to ensure the accuracy of this version, but it is not the official version.

categories reflecting very different views of the available scientific evidence. Commenters who expressed support for the EPA's proposed decision to revise the current primary O_3 standard generally concluded that the body of scientific evidence assessed in the ISA is much stronger and more compelling than in the last review. These commenters also generally emphasized CASAC's interpretation of the body of available evidence, which formed an important part of the basis for CASAC's reiterated recommendations to revise the O_3 standard to provide increased public health protection. In some cases, these commenters supported their positions by citing studies published since the completion of the ISA.

The EPA generally agrees with these commenters regarding the need to revise the current primary O_3 standard in order to increase public health protection though, in many cases, not with their conclusions about the degree of protection that is appropriate (II.C.4.b and II.C.4.c, below). The scientific evidence noted by these commenters was generally the same as that assessed in the ISA (U.S. EPA, 2013) and the proposal,[87] and their interpretation of the evidence was often, though not always, consistent with the conclusions of the ISA and CASAC. The EPA agrees that the evidence available in this review provides a strong basis for the conclusion that the current O_3 standard is not adequately protective of public health. In reaching this conclusion, the EPA places a large amount of weight on the scientific advice of CASAC, and on CASAC's endorsement of the assessment of the evidence in the ISA (Frey and Samet, 2012).

In contrast, while commenters who opposed the proposed decision to revise the primary O_3 standard generally focused on many of the same studies assessed in the ISA, these

[87] As discussed in section I.C above, the EPA has provisionally considered studies that were highlighted by commenters and that were published after the ISA. These studies are generally consistent with the evidence assessed in the ISA, and they do not materially alter our understanding of the scientific evidence or the Agency's conclusions based on that evidence.

This document is a prepublication version, signed by EPA Administrator, Gina McCarthy on 10/1/2015. We have taken steps to ensure the accuracy of this version, but it is not the official version.

commenters highlighted different aspects of these studies and reached substantially different conclusions about their strength and the extent to which progress has been made in reducing uncertainties in the evidence since the last review. These commenters generally concluded that information about the health effects of concern has not changed significantly since 2008 and that the uncertainties in the underlying health science have not been reduced since the 2008 review. In some cases, these commenters specifically questioned the EPA's approach to assessing the scientific evidence and to reaching conclusions on the strength of that evidence in the ISA. For example, several commenters asserted that the EPA's causal framework, discussed in detail in the ISA, is flawed and that it has not been applied consistently across health endpoints. Commenters also noted departures from other published causality frameworks (Samet and Bodurow, 2008) and from the criteria for judging causality put forward by Sir Austin Bradford Hill (Hill, 1965).

The EPA disagrees with comments questioning the ISA's approach to assessing the evidence, the causal framework established in the ISA, or the consistent application of that framework across health endpoints. While the EPA acknowledges the ISA's approach departs from assessment and causality frameworks that have been developed for other purposes, such departures reflect appropriate adaptations for the NAAQS. As with other ISAs, the O_3 ISA uses a five-level hierarchy that classifies the weight of evidence for causation. In developing this hierarchy, the EPA has drawn on the work of previous evaluations, most prominently the IOM's *Improving the Presumptive Disability Decision-Making Process for Veterans* (Samet and Bodurow, 2008), EPA's Guidelines for Carcinogen Risk Assessment (U.S. EPA, 2005), and the U.S. Surgeon General's smoking report (CDC, 2004). The ISA's weight of evidence evaluation is based on the integration of findings from various lines of evidence from across the health and

This document is a prepublication version, signed by EPA Administrator, Gina McCarthy on 10/1/2015. We have taken steps to ensure the accuracy of this version, but it is not the official version.

environmental effects disciplines. These separate judgments are integrated into a qualitative statement about the overall weight of the evidence and causality. The ISA's causal framework has been developed over multiple NAAQS reviews, based on extensive interactions with CASAC and based on the public input received as part of the CASAC review process. In the current review, the causality framework, and the application of that framework to causality determinations in the O_3 ISA, have been reviewed and endorsed by CASAC (Frey and Samet, 2012).

Given these views on the assessment of the evidence in the ISA, it is relevant to note that many of the issues and concerns raised by commenters on the EPA's interpretation of the evidence, and on the EPA's conclusions regarding the extent to which uncertainties have been reduced since the 2008 review, are essentially restatements of issues raised during the development of the ISA, HREA, and/or PA. The CASAC O_3 Panel reviewed the interpretation of the evidence, and the EPA's use of information from specific studies, in drafts of these documents. In CASAC's advice to the Administrator, which incorporates its consideration of many of the issues raised by commenters, CASAC approved of the scientific content, assessments, and accuracy of the ISA, REA, and PA, and indicated that these documents provide an appropriate basis for use in regulatory decision making for the O_3 NAAQS (Frey and Samet, 2012, Frey, 2014a, Frey, 2014c). Therefore, the EPA's responses to many of the comments on the evidence rely heavily on the process established in the ISA for assessing the evidence, which is the product of extensive interactions with CASAC over a number of different reviews, and on CASAC advice received as part of this review of the O_3 NAAQS.

The remainder of this section discusses public comments and the EPA's responses, on controlled human exposure studies (II.B.2.b.i); epidemiologic studies (II.B.2.b.i); and at-risk

This document is a prepublication version, signed by EPA Administrator, Gina McCarthy on 10/1/2015. We have taken steps to ensure the accuracy of this version, but it is not the official version.

populations (II.B.2.b.iii).

i. Evidence from Controlled Human Exposure Studies

This section discusses major comments on the evidence from controlled human exposure studies and provides the Agency's responses to those comments. To support their views on the adequacy of the current standard, commenters often highlighted specific aspects of the scientific evidence from controlled human exposure studies. Key themes discussed by these commenters included the following: (1) the adversity of effects demonstrated in controlled human exposure studies, especially studies conducted at exposure concentrations below 80 ppb; (2) representativeness of different aspects of the controlled human exposure studies for making inferences to the general population and at-risk populations; (3) results of additional analyses of the data from controlled human exposure studies; (4) evaluation of a threshold for effects; and (5) importance of demonstration of inflammation at 60 ppb. This section discusses these key comment themes, and provides the EPA's responses. More detailed discussion of individual comments, and the EPA's responses, is provided in the Response to Comments document.

Adversity

Some commenters who disagreed with the EPA's proposed decision to revise the current primary O_3 standard disputed the Agency's characterization of the adversity of the O_3-induced health effects shown to occur in controlled human exposure studies. Some of these commenters contended that the proposal does not provide a clear definition of adversity or that there is confusion concerning what responses the Administrator considers adverse. The EPA disagrees with these comments, and notes that section II.E.4.d of the proposal describes the Administrator's proposed approach to considering the adversity of effects observed in controlled human exposure studies. Her final approach to considering the adversity of these effects, and her

This document is a prepublication version, signed by EPA Administrator, Gina McCarthy on 10/1/2015. We have taken steps to ensure the accuracy of this version, but it is not the official version.

conclusions on adversity, are described in detail below (II.C.4.b, II.C.4.c).

Other commenters disagreed with the EPA's judgments regarding adversity and expressed the view that the effects observed in controlled human exposure studies following 6.6-hour exposures to O_3 concentrations below the level of the current standard (i.e., 75 ppb) are not adverse.[88] This group of commenters cited several reasons to support their views, including that: (1) the lung function decrements and respiratory symptoms observed at 72 ppb in the study by Schelegle et al. (2009) were not correlated with each other, and therefore were not adverse; and (2) group mean FEV_1 decrements observed following exposures below 75 ppb are small (e.g., < 10%, as highlighted by some commenters), transient and reversible, do not interfere with daily activities, and do not result in permanent respiratory injury or progressive respiratory dysfunction.

While the EPA agrees that not all effects reported in controlled human exposure studies following exposures below 75 ppb can reasonably be considered to be adverse, the Agency strongly disagrees with comments asserting that none of these effects can be adverse. As an initial matter, the Administrator notes that, when considering the extent to which the current or a revised standard could allow adverse respiratory effects, based on information from controlled human exposure studies, she considers not only the effects themselves, but also quantitative estimates of the extent to which the current or a revised standard could allow such effects. Quantitative exposure and risk estimates provide perspective on the extent to which various

[88] Commenters who supported revising the primary O_3 standard often concluded that there is clear evidence for adverse effects following exposures to O_3 concentrations at least as low as 60 ppb, and that such adverse effects support setting the level of a revised primary O_3 standard at 60 ppb. These comments, and the EPA's responses, are discussed below within the context of the Administrator's decision on a revised level (II.C.4.b).

This document is a prepublication version, signed by EPA Administrator, Gina McCarthy on 10/1/2015. We have taken steps to ensure the accuracy of this version, but it is not the official version.

standards could allow populations, including at-risk populations such as children and children with asthma, to experience the types of O_3 exposures that have been shown in controlled human exposure studies to cause respiratory effects. As discussed further below (II.B.3, II.C.4.b, II.C.4.c), to the extent at-risk populations are estimated to experience such exposures repeatedly, the Administrator becomes increasingly concerned about the potential for adverse responses in the exposed population. Repeated exposures provide a plausible mode of action by which O_3 may cause other more serious effects. Thus, even though the Administrator concludes there is important uncertainty in the adversity of some of the effects observed in controlled human exposure studies based on the single exposure periods evaluated in these studies (e.g., FEV_1 decrements observed following exposures to 60 ppb O_3, as discussed in sections II.C.4.b and II.C.4.c below), she judges that the potential for adverse effects increases as the number of exposures increases. Contrary to the commenters' views noted above, the Administrator considers the broader body of available information (i.e., including quantitative exposure and risk estimates) when considering the extent to which the current or a revised standard could allow adverse respiratory effects (II.B.3, II.C.4.b, II.C.4.c, below).

In further considering commenters' views on the potential adversity of the respiratory effects themselves (i.e., without considering quantitative estimates), the EPA notes that although the results of controlled human exposure studies provide a high degree of confidence regarding the occurrence of health effects following exposures to O_3 concentrations from 60 to 80 ppb, there are no universally accepted criteria by which to judge the adversity of the observed effects. Therefore, as in the proposal, the Administrator relies upon recommendations from the ATS and advice from CASAC to inform her judgments on adversity.

In particular, the Administrator focuses on the ATS recommendation that "reversible loss

This document is a prepublication version, signed by EPA Administrator, Gina McCarthy on 10/1/2015. We have taken steps to ensure the accuracy of this version, but it is not the official version.

of lung function in combination with the presence of symptoms should be considered adverse" (ATS, 2000a). The study by Schelegle et al. (2009) reported a statistically significant decrease in group mean FEV_1 and a statistically significant increase in respiratory symptoms in healthy adults following 6.6-hour exposures to average O_3 concentrations of 72 ppb. In considering these effects, CASAC noted that "the combination of decrements in FEV_1 together with the statistically significant alterations in symptoms in human subjects exposed to 72 ppb ozone meets the American Thoracic Society's definition of an adverse health effect" (Frey, 2014c, p. 5).

As mentioned above, some commenters nonetheless maintained that the effects observed in Schelegle et al. (2009) following exposure to 72 ppb O_3 (average concentration) were not adverse because the magnitudes of the FEV_1 decrements and the increases in respiratory symptoms (as measured by the total subjective symptoms score, TSS) were not correlated across individual study subjects. A commenter submitted an analysis of the individual-level data from the study by Schelegle et al. (2009) to support their position. This analysis indicated that, while the majority of study volunteers (66%) did experience both lung function decrements and increased respiratory symptoms following 6.6-hour exposures to 72 ppb O_3, some (33%) did not (e.g., Figure 3 in comments from Gradient).[89] In addition, the study subjects who experienced relatively large lung function decrements did not always also experience relatively large increases in respiratory symptoms. These commenters interpreted the lack of a statistically significant correlation between the magnitudes of decrements and symptoms as meaning that the effects reported by Schelegle et al. (2009) at 72 ppb did not meet the ATS criteria for an adverse

[89] The figure provided in comments by Gradient only clearly illustrated the responses of 30 out of 31 subjects.

This document is a prepublication version, signed by EPA Administrator, Gina McCarthy on 10/1/2015. We have taken steps to ensure the accuracy of this version, but it is not the official version.

response.

However, the ATS recommendation that the combination of lung function decrements and symptomatic responses be considered adverse is not restricted to effects of a particular magnitude nor a requirement that individual responses be correlated. Similarly, CASAC made no such qualifications in its advice on the combination of respiratory symptoms and lung function decrements (See e.g., Frey, 2014c, p. 5). Therefore, as in the proposal and consistent with both CASAC advice and ATS recommendations, the EPA continues to conclude that the finding of both statistically significant decrements in lung function and significant increases in respiratory symptoms following 6.6-hour exposures to an average O_3 concentration of 72 ppb provides a strong indication of the potential for exposed individuals to experience this combination of effects.[90]

In particular, the Administrator notes that lung function provides an objective measure of the respiratory response to O_3 exposure while respiratory symptoms are subjective, and as evaluated by Schelegle et al. (2009) were based on a TSS score. If an O_3 exposure causes increases in both objectively measured lung function decrements and subjective respiratory symptoms, which indicate that people may modify their behavior in response to the exposure, then the effect is properly viewed as adverse. As noted above, the commenter's analysis shows that the majority of study volunteers exposed to 72 ppb O_3 in the study by Schelegle et al. (2009) did, in fact, experience both a decrease in lung function and an increase in respiratory symptoms.

In further considering this comment, the EPA recognizes that, consistent with

[90] Indeed, the finding of statistically significant decreases in lung function and increases in respiratory symptoms in the same study population indicates that, on average, study volunteers did experience both effects.

This document is a prepublication version, signed by EPA Administrator, Gina McCarthy on 10/1/2015. We have taken steps to ensure the accuracy of this version, but it is not the official version.

commenter's analysis, some individuals may experience large decrements in lung function with minimal to no respiratory symptoms (McDonnell et al., 1999), and vice versa. As indicated above and discussed in the proposal (79 FR 75289), the Administrator acknowledges such interindividual variability in responsiveness in her interpretation of estimated exposures of concern. Specifically, she notes that not everyone who experiences an exposure of concern, including for the 70 ppb benchmark, is expected to experience an adverse response. However, she further judges that the likelihood of adverse effects increases as the number of occurrences of O_3 exposures of concern increases. In making this judgment, she notes that the types of respiratory effects that can occur following exposures of concern, particularly if experienced repeatedly, provide a plausible mode of action by which O_3 may cause other more serious effects.[91] Therefore, her decisions on the primary standard emphasize the public health importance of limiting the occurrence of repeated exposures to O_3 concentrations at or above those shown to cause adverse effects in controlled human exposure studies (II.B.3, II.C.4.b, II.C.4.c). The Administrator views this approach to considering the evidence from controlled human exposure studies as being consistent with commenter's analysis indicating that, while the majority did, not all study volunteers exposed to 72 ppb O_3 experienced the adverse combination of lung function decrements and respiratory symptoms following the single exposure period evaluated by Schelegle et al. (2009).

Representativeness

[91] For example, as discussed in the proposal (79 FR 75252) and the ISA (p. 6-76), inflammation induced by a single exposure (or several exposures over the course of a summer) can resolve entirely. However, repeated occurrences of airway inflammation could potentially result in the induction of a chronic inflammatory state; altered pulmonary structure and function, leading to diseases such as asthma; altered lung host defense response to inhaled microorganisms; and altered lung response to other agents such as allergens or toxins (ISA, section 6.2.3).

This document is a prepublication version, signed by EPA Administrator, Gina McCarthy on 10/1/2015. We have taken steps to ensure the accuracy of this version, but it is not the official version.

A number of commenters raised issues concerning the representativeness of controlled human exposure studies considered by the Administrator in this review, based on different aspects of these studies. These commenters asserted that since the controlled human exposure studies were not representative of real-world exposures, they should not be relied upon as a basis for finding that the current standard is not adequate to protect public health. Some issues highlighted by commenters include: small size of the study populations; unrealistic activity levels used in the studies; unrealistic exposure scenarios (i.e., triangular exposure protocol) used in some studies, including Schelegle et al. (2009); and differences in study design that limit comparability across studies.

Some commenters noted that the controlled human exposure studies were not designed to have individuals represent portions of any larger group and that the impacts on a small number of people do not implicate the health of an entire subpopulation, particularly when the FEV_1 decrements are small, temporary, and reversible. These commenters also noted that the Administrator failed to provide an explanation or justification for why the individuals in these studies can be viewed as representatives of a subpopulation. Further, they asserted that EPA's use of results from individuals, rather than the group mean responses, contradicts the intent of CAA section 109 to protect groups of people, not just the most sensitive individuals in any group (79 FR 75237).

Consistent with CASAC advice (Frey, 2014c, p. 5), the EPA concludes that the body of controlled human exposure studies are sufficiently representative to be relied upon as a basis for finding that the current standard is not adequate to protect public health. These studies generally recruit healthy young adult volunteers, and often expose them to O_3 concentrations found in the ambient air under real-world exposure conditions. As described in more detail above in section

This document is a prepublication version, signed by EPA Administrator, Gina McCarthy on 10/1/2015. We have taken steps to ensure the accuracy of this version, but it is not the official version.

II.A.1.b, the evidence from controlled human exposure studies to date makes it clear that there is considerable variability in responses across individuals, even in young healthy adult volunteers, and that group mean responses are not representative of more responsive individuals. It is important to look beyond group mean responses to the responses of these individuals to evaluate the potential impact on more responsive members of the population. Moreover, relying on group mean changes to evaluate lung function responses to O_3 exposures would mask the responses of the most sensitive groups, particularly where, as here, the group mean reflects responses solely among the healthy young adults who were the study participants. Thus, the studies of exposures below 80 ppb O_3 show that 10% of young healthy adults experienced FEV_1 decrements > 10% following exposures to 60 ppb O_3, and 19% experienced such decrements following exposures to 72 ppb (under the controlled test conditions involving moderate exertion for 6.6 hours). These percentages would likely have been higher had people with asthma or other at-risk populations been exposed (U.S. EPA, 2013, pp. 6-17 and 6-18; Frey 2014c, p. 7; Frey, 2014a, p. 14[92]).

Moreover, the EPA may legitimately view the individuals in these studies as representatives of the larger subpopulation of at-risk or sensitive groups. As stated in the Senate Report to the 1970 legislation establishing the NAAQS statutory provisions, "the Committee emphasizes that included among these persons whose health should be protected by the ambient standard are particularly sensitive citizens such as bronchial asthmatics and emphysematics who in the normal course of daily activity are exposed to the ambient environment. In establishing an ambient standard necessary to protect the health of these persons, reference should be made to a

[92] See also *National Environmental Development Associations Clean Action Project v. EPA*, 686 F. 3d 803, 811 (D.C. Cir.2012) (EPA drew legitimate inference that serious asthmatics would experience more serious health effects than clinical test subjects who did not have this degree of lung function impairment).

This document is a prepublication version, signed by EPA Administrator, Gina McCarthy on 10/1/2015. We have taken steps to ensure the accuracy of this version, but it is not the official version.

representative sample of persons comprising the sensitive group rather than to a single person in such a group….For purposes of this description, a statistically related sample is the number of persons necessary to test in order to detect a deviation in the health of any person within such sensitive group which is attributable to the condition of the ambient air." S. Rep. No. 11-1196, 91st Cong. 2d sess. at 10. As just noted above, 10% of healthy young adults in these studies experienced > 10% FEV_1 decrements following exposure to 60 ppb O_3, and the proportion of individuals experiencing such decrements increases with increasing O_3 exposure concentrations. This substantial percentage certainly can be viewed as "a representative sample of persons" and as a sufficient number to "detect a deviation in the health of any person within such sensitive group," especially given that it reflects the percentage of *healthy adults* who experienced decrements > 10%.

These results are consistent with estimates from the MSS model, which makes reliable quantitative predictions of the lung function response to O_3 exposures, and reasonably predicts the magnitude of individual lung function responses following such exposures. As described in section II.A.2.c above, and documented in the HREA, when the MSS model was used to quantify the risk of O_3-induced FEV_1 decrements in 15 urban study areas, the current standard was estimated to allow about 8 to 12% of children to experience two or more O_3-induced FEV_1 decrements ≥ 10%, and about 2 to 3% to experience two or more decrements ≥ 15% (Table 2, above). These percentages correspond to hundreds of thousands of children in urban study areas, and tens of thousands of asthmatic children. While the Administrator judges that there is uncertainty with regard to the adversity of these O_3-induced lung function decrements (see II.C.4.b, II.C.4.c, below), such risk estimates clearly indicate that they are a matter of public health importance on a broad scale, not isolated effects on idiosyncratically responding

This document is a prepublication version, signed by EPA Administrator, Gina McCarthy on 10/1/2015. We have taken steps to ensure the accuracy of this version, but it is not the official version.

individuals.

Other commenters considered the ventilation rates used in controlled human exposure studies to be unreasonably high and at the extreme of prolonged daily activity. Some of these commenters noted that these scenarios are unrealistic for sensitive populations, such as asthmatics and people with COPD, whose conditions would likely prevent them from performing the intensity of exercise, and therefore experiencing the ventilation rates, required to produce decrements in lung function observed in experimental settings.

The EPA disagrees with these commenters. The activity levels used in controlled human exposure studies were summarized in Table 6-1 of the ISA (U.S. EPA, 2013). The exercise level in the 6.6-hour exposure studies by Adams (2006), Schelegle et al. (2009), and Kim et al. (2011) of young healthy adults was moderate and ventilation rates are typically targeted for 20 L/min-m^2 BSA.[93] Following the exposures to 60 ppb at this activity level, 10% of the individuals had greater than a 10% decrement in FEV_1 (U.S. EPA, 2013, p. 6-18). Similar 6.6-hour exposure studies of individuals with asthma are not available to assess either the effects of O_3 on their lung function or their ability to perform the required level of moderate exercise.

However, referring to Tables 6-9 and 6-10 of the HREA (U.S. EPA, 2014a), between 42% and 45% of FEV_1 decrements ≥ 10% were estimated to occur at exercise levels of <13 L/min-m^2 BSA. This corresponds to light exercise, and this level of exercise has been used in a 7.6-hour study of healthy people and people with asthma exposed to 160 ppb O_3 (Horstman et al., 1995). In that study, people with asthma exercised with an average minute ventilation of 14.2

[93] Exercise consisted of alternating periods walking on a treadmill at a pace of 17-18 minutes per mile inclined to a grade of 4-5% or cycling at a load of about 72 watts. Typical heart rates during the exercise periods were between 115-130 beats per minute. This activity level is considered moderate (Table 6-1, U.S. EPA, 2013, p. 6-18).

This document is a prepublication version, signed by EPA Administrator, Gina McCarthy on 10/1/2015. We have taken steps to ensure the accuracy of this version, but it is not the official version.

L/min-m^2 BSA. Adjusted for filtered air responses, an average 19% FEV_1 decrement was seen in the people with asthma versus an average 10% FEV_1 decrement in the healthy people. In addition, the EPA noted in the HREA that the data underlying the exposure assessment indicate that "activity data for asthmatics [is] generally similar to [that for] non-asthmatics" (U.S. EPA, 2014a, p. 5-75, Tables 5G-2 and 5G-3). Thus, contrary to the commenters' assertion, based on both the HREA and the Horstman et al. (1995) study, people with respiratory disease such as asthma can exercise for a prolonged period under conditions where they would experience >10% FEV_1 decrements in response to O_3 exposure.

Additionally, a number of commenters asserted that the exposure scenarios in Schelegle et al. (2009), which are based on a so-called triangular study protocol, where O_3 concentrations ramp up and down as the study is conducted, are not directly generalizable to most healthy or sensitive populations because of large changes in the O_3 concentrations from one hour to the next. Commenters stated that although large fluctuations in O_3 are possible in certain locations due to meteorological conditions (e.g., in valleys on very hot, summer days), they believe that, in general, concentrations of O_3 do not fluctuate by more than 20-30 ppb from one hour to the next. Thus, commenters suggested the Schelegle et al. (2009) study design could happen in a "worst-case" exposure scenario, but that the exposure protocol was not reflective of conditions in most cities and thus not informative with regard to the adequacy of the current standard.

The EPA disagrees with the comment that these triangular exposure scenarios are not generalizable because of hour-to-hour fluctuations. Adams (2002, 2006) showed that FEV_1 responses following 6.6 hours of exposure to 60 and 80 ppb average O_3 exposures do not differ between triangular (i.e. ramping concentration up and down) and square-wave (i.e. constant concentration). Schelegle et al. (2009) used the 80 ppb triangular protocol and a slightly

This document is a prepublication version, signed by EPA Administrator, Gina McCarthy on 10/1/2015. We have taken steps to ensure the accuracy of this version, but it is not the official version.

modified 60 ppb triangular protocol (concentrations during the third and fourth hours were reversed) from Adams (2006). Therefore, in considering pre- to post-exposure changes in lung function, concerns about the hour-by-hour changes in O_3 concentrations at 60 and 80 ppb in the Schelegle et al. (2009) study are unfounded.

Finally, some commenters also stated that the Kim et al. (2011) study is missing critical information and its study design makes comparison to the other studies difficult. That is, the commenter suggests that data at times other than pre- and post-exposure should have been provided.

The EPA disagrees with this comment. With regard to providing data at other time points besides pre- and post-exposure, there is no standard that suggests an appropriate frequency at which lung function should be measured in prolonged 6.6-hour exposure studies. The Adams (2006) study showed that lung function decrements during O_3 exposures with moderate exercise become most apparent following the third hour of exposure. As such, it makes little sense to measure lung function during the first couple hours of exposure. However, having data at multiple time points toward the end of an exposure can provide evidence that the mean post-exposure FEV_1 response is not a single anomalous data point. The FEV_1 response data for the 3-, 4.6-, 5.6-, and 6.6-hour time points of the Kim et al. (2011) study are available in Figure 6 of the McDonnell et al. (2012) paper where they are plotted with the Adams (2006) data for 60 ppb. Similar to the Adams (2006) study, the responses at 5.6 hours are only marginally smaller than the response at 6.6 hours in the Kim et al. (2011) study. This indicates that the post-exposure FEV_1 responses in both studies are consistent with responses at an earlier time point and thus not likely to be anomalous data.

<u>Additional studies</u>

This document is a prepublication version, signed by EPA Administrator, Gina McCarthy on 10/1/2015. We have taken steps to ensure the accuracy of this version, but it is not the official version.

Several commenters analyzed the data from controlled human exposure studies, or they commented on the EPA's analysis of the data from some of these studies (Brown et al., 2008), to come to a different conclusion than the EPA's interpretation of these studies thereby questioning the proposed decision that the current standard is not adequate to protect public health. One commenter submitted an independent assessment of the scientific evidence and risk, and used this analysis to assert that there are multiple flaws in the underlying studies and their interpretation by the EPA. This commenter stated that the EPA's discussion of the spirometric responses of children and adolescents and older adults to O_3 was misleading. They claimed that the EPA did not mention that "the responses of children and adolescents are equivalent to those of young adults (18-35 years old; McDonnell et al., 1985) and that this response diminishes in middle-aged and older adults (Hazucha 1985)." The EPA notes that the commenter misrepresented our characterization of the effect of age on FEV_1 responses to O_3 and asserted mistakenly that EPA did not mention diminished responses on older adults. In fact, the proposal clearly states that, "Respiratory symptom responses to O_3 exposure appears to increase with age until early adulthood and then gradually decrease with increasing age (U.S. EPA, 1996b); lung function responses to O_3 exposure also decline from early adulthood (U.S. EPA, 1996b)" (79 FR 75267) (see also U.S. EPA, 2014c p. 3-82). With regard to differences between children and adults, it was clearly stated in the ISA (U.S. EPA, 2013, p. 6-21) that healthy children exposed to filtered air and 120 ppb O_3 experienced similar spirometric responses, but lesser symptoms than similarly exposed young healthy adults (McDonnell et al., 1985). In addition, the EPA's approach to modeling the effect of age on responses to O_3 is clearly provided in the HREA (U.S. EPA, 2014a, Table 6-2).

The commenter also stated that the EPA's treatment of filtered air responses in the dose-

This document is a prepublication version, signed by EPA Administrator, Gina McCarthy on 10/1/2015. We have taken steps to ensure the accuracy of this version, but it is not the official version.

response curve was incorrect. They claimed that when creating a dose-response curve, it is most appropriate to include a zero-dose point and not to subtract the filtered air response from responses to O_3. Contrary to this assertion, EPA correctly adjusted FEV_1 responses to O_3 by responses following filtered air, as was also done in the McDonnell et al. (2012) model. As indicated in the ISA (U.S. EPA, 2013, p. 6-4), the majority of controlled human exposure studies investigating the effects O_3 are of a randomized, controlled, crossover design in which subjects were exposed, without knowledge of the exposure condition and in random order, to clean filtered air and, depending on the study, to one or more O_3 concentrations. The filtered air control exposure provides an unbiased estimate of the effects of the experimental procedures on the outcome(s) of interest. Comparison of responses following this filtered air exposure to those following an O_3 exposure allows for estimation of the effects of O_3 itself on an outcome measurement while controlling for independent effects of the experimental procedures, such as ventilation rate. Thus, the commenter's approach does not provide an estimate of the effects of O_3 alone. Furthermore, as illustrated in these comments, following "long" filtered air exposures, there is about a 1% improvement in FEV_1. By not accounting for this increase in FEV_1, the commenter underestimated the FEV_1 decrement due to O_3 exposure. The commenter's approach thus is fundamentally flawed.

The commenter also asserted that the McDonnell et al. (2012) model and exposure-response (E-R) models incorrectly used only the most responsive people and that EPA's reliance on data from clinical trials that use only the most responsive people irrationally ignores large portions of relevant data. The EPA rejects this assertion that the McDonnell et al. (2012) model and the E-R analysis ignored large portions of relevant data. The McDonnell et al. (2012) model was fit to the FEV_1 responses of 741 individuals to O_3 and filtered air (i.e., reflecting all

This document is a prepublication version, signed by EPA Administrator, Gina McCarthy on 10/1/2015. We have taken steps to ensure the accuracy of this version, but it is not the official version.

available data for O_3-induced changes in FEV_1). The filtered air responses were subtracted from responses measured during O_3 exposures. Subsequently, as illustrated by the figures in the McDonnell et al. (2012) paper and described in the text of paper, the model was fit to all available FEV_1 data measured during the course of O_3 exposures, including exposures shorter than 6.6 hours. Thus, the model predicts temporal dynamics of FEV_1 response to any set of O_3 exposure conditions that might reasonably be experienced in the ambient environment, predicting the mean responses and the distribution of responses around the mean. For the HREA (EPA, 2014a), the proportion of individuals, under variable exposure conditions, predicted to have FEV_1 decrements ≥ 10, 15 and 20% was estimated.

Finally, the commenter referenced the exposure-response model on p. 6-18 of the HREA. However, they neglected to note that this was in a section describing the exposure-response function approach used in prior reviews (U.S. EPA, 2014a, starting on p. 6-17). Thus, the commenter confused the exposure-response model used in the last review with the updated approach used in this review.

The commenter also stated that EPA did not properly consider O_3 dose when interpreting the human clinical data. Ozone total dose includes three factors: duration of exposure, concentration, and ventilation rate. The commenter claimed the EPA emphasized only concentration without properly considering and communicating duration of exposure and ventilation rate. Further, they asserted that because people are not exposed to the same dose, they cannot be judged to have the same exposure and would therefore not be expected to respond consistently. The EPA rejects the claim that we emphasized only concentration without properly incorporating the other two factors. As noted in the ISA, total O_3 dose does not describe the temporal dynamics of FEV_1 responses as a function of concentration, ventilation rate, time and

This document is a prepublication version, signed by EPA Administrator, Gina McCarthy on 10/1/2015. We have taken steps to ensure the accuracy of this version, but it is not the official version.

age of the exposed individuals (U.S. EPA, 2013, p. 6-5). Thus, the use of total O_3 dose is antiquated and the EPA therefore conducted a more sophisticated analysis of FEV_1 response to O_3 in the HREA. In this review, the HREA estimates risks of lung function decrements in school-aged children (ages 5 to 18), asthmatic school-aged children, and the general adult population for 15 urban study areas. A probabilistic model designed to account for the numerous sources of variability that affect people's exposures was used to simulate the movement of individuals through time and space and to estimate their exposure to O_3 while occupying indoor, outdoor, and in-vehicle locations. That information was linked with the McDonnell et al. (2012) model to estimate FEV_1 responses over time as O_3 exposure concentrations and ventilation rates changed. As noted earlier, CASAC agreed that this approach is both scientifically valid and a significant improvement over approaches used in past O_3 reviews (Frey, 2014a, p. 2).

Several commenters criticized the EPA analysis published by Brown et al. (2008). One commenter suggested that the EPA needed to state why the Brown et al. (2008) analysis was relied on rather than Nicolich (2007) or Lefohn et al. (2010). Further, commenters stated that the analysis of the Adams (2006) data in Brown et al. (2008) was flawed. Among other reasons, one commenter expressed the opinion that it was not appropriate for Brown et al. (2008) to only examine a portion of the Adams (2006) data, citing comments submitted by Gradient.

The EPA disagrees with these commenters.[94] As an initial matter, Nicolich (2007) was a public comment and is not a peer-reviewed publication that would be used to assess the scientific

[94] The D.C. Circuit has held that EPA reasonably used and interpreted the Brown (2007) study in the last review. *Mississippi*, 744 F. 3d at 1347. In this review, there is now additional corroborative evidence supporting the Brown (2007) analysis, in the form of further controlled human clinical studies finding health effects in young, healthy adults at moderate exercise at O_3 concentrations of 60 ppb over a 6.6 hour exposure period.

This document is a prepublication version, signed by EPA Administrator, Gina McCarthy on 10/1/2015. We have taken steps to ensure the accuracy of this version, but it is not the official version.

evidence for effects of O_3 on lung function in the ISA (U.S. EPA, 2013). The Nicolich (2007) comments were specifically addressed by the EPA on pp. 24-25 in the Response to Comments Document for the 2007 proposed rule (U.S. EPA, 2008). On page A-3 of his comments, Dr. Nicolich stated "that the residuals are not normally distributed and the observations do not meet the assumptions required for the model" and that "the subject-based errors are not independently, identically and normally distributed and the subjects do not meet the assumptions required for the model." The EPA reasonably chose not to rely on this analysis: "Therefore, given that the underlying statistical assumptions required for his analyses were not met and that significance levels are questionable, in EPA's judgment the analyses presented by Dr. Nicolich are ambiguous" (U.S. EPA, 2008). It is likely that the Lefohn et al. (2010) analysis of the Adams (2006) data would similarly not meet the statistical assumptions of the model (e.g., homoscedasticity). In contrast, recognizing the concerns related to the distribution of responses, Brown et al. (2008) conservatively used a nonparametric sign test to obtain a p-value of 0.002 for the comparison responses following 60 ppb O_3 versus filter air. Other common statistical tests also showed significant effects on lung function. In addition, the effects of 60 ppb O_3 on FEV_1 responses in Brown et al. (2008) remained statistically significant even following the exclusion of three potential outliers.

EPA disagrees with the comment stating that it was not appropriate for Brown et al. (2008) to only examine a portion of the Adams (2006) data. In fact, there is no established single manner or protocol decreeing that data throughout the protocol must be analyzed and included. Furthermore, Brown et al. (2008) was a peer-reviewed journal publication. CASAC also expressed favorable comments in their March 30, 2011, letter to Administrator Jackson. With reference to a memorandum (Brown, 2007) that preceded the Brown et al. (2008) publication, on

This document is a prepublication version, signed by EPA Administrator, Gina McCarthy on 10/1/2015. We have taken steps to ensure the accuracy of this version, but it is not the official version.

p. 6 of the CASAC Consensus Responses to Charge Questions CASAC stated, "The results of the Adams et al. study also have been carefully reanalyzed by EPA investigators (Brown et. al., [2008]), and this reanalysis showed a statistically significant group effect on FEV_1 after 60 ppb ozone exposure." On p. A-13, a CASAC panelist and biostatistician stated, "Thus, from my understanding of the statistical analyses that have been conducted, I would argue that the analysis by EPA should be preferred to that of Adams for the specific comparison of the FEV_1 effects of 0.06 ppm exposure relative to filtered air exposure." (Samet 2011, p. a-13)

Threshold

Several commenters used the new McDonnell et al. (2012) and Schelegle et al. (2012) models to support their views about the O_3 concentrations associated with a threshold for adverse lung function decrements. For example, one commenter who supported retaining the current standard noted that McDonnell et al. (2012) found that the threshold model fit the observed data better than the original (no-threshold) model, especially at earlier time points and at the lowest exposure concentrations. The commenter expressed the view that the threshold model showed that the population mean FEV_1 decrement did not reach 10% until exposures were at least 80 ppb, indicating that O_3 exposures of 80 ppb or higher may cause lung function decrements and other respiratory effects.[95]

As described above in section II.A.1.b, the McDonnell et al. (2012) and Schelegle et al. (2012) models represent a significant technological advance in the exposure-response modeling approach since the last review, and these models indicate that a dose-threshold model fits the

[95] Conversely, another group of commenters who supported revising the standard to a level of 60 ppb noted that the results of these models are consistent with the results of controlled human exposure studies finding adverse health effects at 60 ppb. These comments are discussed below (II.C.4.b), within the context of the Administrator's decision on a revised standard level.

This document is a prepublication version, signed by EPA Administrator, Gina McCarthy on 10/1/2015. We have taken steps to ensure the accuracy of this version, but it is not the official version.

data better than a non-threshold model. However, the EPA disagrees that using the predicted group mean response from the McDonnell model provides support for retaining the current standard. As discussed above, the group mean responses do not convey information about interindividual variability, or the proportion of the population estimated to experience the larger lung function decrements (e.g., 10 or 15% FEV_1 decrements) that could be adverse. In fact, it masks this variability. These variable effects in individuals have been found to be reproducible. In other words, a person who has a large lung function response after exposure to O_3 will likely have about the same response if exposed again in a similar manner (raising health concerns, as noted above). Group mean responses are not representative of this segment of the population that has much larger than average responses to O_3.

Inflammation

Some commenters asserted that the pulmonary inflammation observed following exposure to 60 ppb in the controlled human exposure study by Kim et al. (2011) was small and unlikely to result in airway damage. It was also suggested that this inflammation is a normal physiological response in all living organisms to stimuli to which people are normally exposed.

The EPA recognized in the proposal (79 FR 75252) and the ISA (U.S. EPA, 2013, p. 6-76) that inflammation induced by a single exposure (or several exposures over the course of a summer) can resolve entirely. Thus, the inflammatory response observed following the single exposure to 60 ppb in the study by Kim et al. (2011) is not necessarily a concern. However, the EPA notes that it is also important to consider the potential for continued acute inflammatory responses to evolve into a chronic inflammatory state and to affect the structure and function of

This document is a prepublication version, signed by EPA Administrator, Gina McCarthy on 10/1/2015. We have taken steps to ensure the accuracy of this version, but it is not the official version.

the lung.[96] The Administrator considers this possibility through her consideration of estimated exposures of concern for the 60 ppb benchmark (II.B.3, II.C.4). As discussed in detail below (II.C.4.b), while she judges that there is uncertainty in the adversity of the effects shown to occur following exposures to 60 ppb O_3, including the inflammation reported by Kim et al. (2011), she gives some consideration to estimates of two or more exposures of concern for the 60 ppb benchmark (i.e., as a health-protective surrogate for repeated exposures of concern at or above 60 ppb), particularly when considering the extent to which the current and revised standards incorporate a margin of safety.

ii. Evidence from epidemiologic studies

This section discusses key comments on the EPA's assessment of the epidemiologic evidence and provides the Agency's responses to those comments. The focus in this section is on overarching comments related to the EPA's approach to assessing and interpreting the epidemiologic evidence as a whole. Detailed comments on specific studies, or specific methodological or technical issues, are addressed in the Response to Comments document. As discussed above, many of the issues and concerns raised by commenters on the interpretation of the epidemiologic evidence are essentially restatements of issues raised during the development of the ISA, HREA, and/or PA, and in many instances were considered by CASAC in the development of its advice on the current standard. The EPA's responses to these comments rely heavily on the process established in the ISA for assessing the evidence, and on CASAC advice

[96] Inflammation induced by exposure of humans to O_3 can have several potential outcomes, ranging from resolving entirely following a single exposure to becoming a chronic inflammatory state (U.S. EPA, 2013, section 6.2.3). Lung injury and the resulting inflammation provide a mechanism by which O_3 may cause other more serious morbidity effects (e.g., asthma exacerbations) (U.S. EPA, 2013, section 6.2.3). See generally section II.A.1.a above.

This document is a prepublication version, signed by EPA Administrator, Gina McCarthy on 10/1/2015. We have taken steps to ensure the accuracy of this version, but it is not the official version.

received as part of this review of the O_3 NAAQS.

As with evidence from controlled human exposure studies, commenters expressed sharply divergent views on the evidence from epidemiologic studies, and on the EPA's interpretation of that evidence. One group of commenters, representing medical, public health and environmental organizations, and some states, generally supported the EPA's interpretation of the epidemiologic evidence with regard to the consistency of associations, the coherence with other lines of evidence, and the support provided by epidemiologic studies for the causality determinations in the ISA. These commenters asserted that the epidemiologic studies evaluated in the ISA provide valuable information supporting the need to revise the level of the current primary O_3 standard in order to increase public health protection. In reaching this conclusion, commenters often cited studies (including a number from the past review) which they interpreted as showing health effect associations in locations with O_3 air quality concentrations below the level of the current standard. A second group of commenters, mostly representing industry associations, businesses, and states opposed to revising the primary O_3 standard, expressed the general view that while many new epidemiologic studies have been published since the last review of the O_3 NAAQS, inconsistencies and uncertainties inherent in these studies as a whole, and in the EPA's assessment of study results, should preclude any reliance on them as justification for a more stringent primary O_3 standard. To support their views, these commenters often focused on specific technical or methodological issues that contribute to uncertainty in epidemiologic studies, including the potential for exposure error, confounding by copollutants and by other factors (e.g., weather, season, disease, day of week, etc.), and heterogeneity in results across locations.

The EPA agrees with certain aspects of each of these views. Specifically, while the EPA

This document is a prepublication version, signed by EPA Administrator, Gina McCarthy on 10/1/2015. We have taken steps to ensure the accuracy of this version, but it is not the official version.

agrees that epidemiologic studies are an important part of the broader body of evidence that supports the ISA's causality determinations, and that these studies provide support for the decision to revise the current primary O_3 standard, the Agency also acknowledges that there are important uncertainties and limitations associated with these epidemiologic studies that should be considered when reaching decisions on the current standard. Thus, although these studies show consistent associations between O_3 exposures and serious health effects, including morbidity and mortality, and some of these studies reported such associations with ambient O_3 concentrations below the level of the current standard, there are also uncertainties regarding the ambient O_3 concentrations in critical studies, such that they lend only limited support to establishing a specific level for a revised standard. (See generally, *Mississippi*, 744 F. 3d at 1351 (noting that in prior review, EPA reasonably relied on epidemiologic information in determining to revise the standard but appropriately gave the information limited weight in determining a level of a revised standard); see also *ATA III*¸ 283 F. 3d at 370 (EPA justified in revising NAAQS when health effect associations are observed in epidemiologic studies at levels allowed by the current NAAQS); *Mississippi*, 744 F. 3d at 1345 (same)).

Uncertainties in the evidence were considered by the Administrator in the proposal, and contributed to her decision to place less weight on information from epidemiologic studies than on information from controlled human exposure studies when considering the adequacy of the current primary O_3 standard (see 79 FR 75281-83). Despite receiving less weight in the proposal, the EPA does not agree with commenters who asserted that uncertainties in the epidemiologic evidence provide a basis for concluding that the current primary standard does not need revision. The Administrator specifically considered the extent to which available studies support the occurrence of O_3 health effect associations with air quality likely to be allowed by the current

This document is a prepublication version, signed by EPA Administrator, Gina McCarthy on 10/1/2015. We have taken steps to ensure the accuracy of this version, but it is not the official version.

standard, while also considering the implications of important uncertainties, as assessed in the ISA and discussed in the PA. This consideration is consistent with CASAC comments on consideration of these studies in the draft PA (Frey, 2014c, p. 5).

Based on analyses of study area air quality in the PA, the EPA notes that most of the U.S. and Canadian epidemiologic studies evaluated were conducted in locations likely to have violated the current standard over at least part of the study period. Although these studies support the ISA's causality determinations, they provide limited insight into the adequacy of the public health protection provided by the current primary O_3 standard. However, as discussed in the proposal, air quality analyses in the locations of three U.S. single-city studies provide support for the occurrence of O_3-associated hospital admissions or emergency department visits at ambient O_3 concentrations below the level of the current standard.[97] Specifically, a U.S. single-city study reported associations with respiratory emergency department visits in children and adults in a location that would have met the current O_3 standard over the entire study period (Mar and Koenig, 2009). In addition, for two studies conducted in locations where the current standard was likely not met (i.e., Silverman and Ito, 2010; Strickland et al., 2010), PA analyses indicate that reported concentration-response functions and available air quality data support the occurrence of O_3-health effect associations on subsets of days with virtually all monitored ambient O_3 concentrations below the level of the current standard (U.S. EPA, 2014c, section

[97] As discussed in section II.E.4.d of the proposal, is the Administrator noted the greater uncertainty in using analyses of short-term O_3 air quality in locations of the multicity studies in this review to inform decisions on the primary O_3 standard. This is because the health information in these studies cannot be disaggregated by individual city. Thus, the multicity effect estimates reported in these studies do not provide clear indication of the extent to which health effects are associated with the ambient O_3 concentrations in the study locations that met the current O_3 standard, versus the ambient O_3 concentrations in the study locations that violated the standard.

This document is a prepublication version, signed by EPA Administrator, Gina McCarthy on 10/1/2015. We have taken steps to ensure the accuracy of this version, but it is not the official version.

3.1.4.2, pp. 3-66 to 67).[98] Thus, the EPA notes that a small number of O_3 epidemiologic studies provide support for the conclusion that the current primary standard is not requisite, and that it should be revised to increase public health protection.

As part of a larger set of comments criticizing the EPA's interpretation of the evidence from time series epidemiologic studies, some commenters objected to the EPA's reliance on the studies by Strickland et al. (2010), Silverman and Ito (2010), and Mar and Koenig (2009). These commenters highlighted what they considered to be key uncertainties in interpreting these studies, including uncertainties due to the potential for confounding by co-pollutants, aeroallergens, or the presence of upper respiratory infections; and uncertainties in the interpretation of zero-day lag models (i.e., specifically for Mar and Koenig, 2009).

While the EPA agrees that there are uncertainties associated with interpreting the O_3 epidemiologic evidence, as discussed above and elsewhere in this preamble, we disagree with commenters' assertion that these uncertainties should preclude the use of the O_3 epidemiologic evidence in general, or the studies by Silverman and Ito, Strickland, or Mar and Koenig in particular, as part of the basis for the Administrator's decision to revise the current primary standard. As a general point, when considering the potential importance of uncertainties in epidemiologic studies, we rely on the broader body of evidence, not restricted to these three studies, and the ISA conclusions based on this evidence. The evidence, the ISA's interpretation

[98] Air quality analyses in locations of the studies by Silverman and Ito (2010) and Strickland et al. (2010) were used in the PA to inform staff conclusions on the adequacy of the current primary O_3 standard. However, the appropriate interpretation of these analyses became less clear for standard levels below 75 ppb, as the number of days increased with monitored concentrations exceeding the level being evaluated (U.S. EPA, 2014c, Appendix 3B, Tables 3B-6 and 3B-7). Therefore, these analyses were not used in the PA to inform conclusions on potential alternative standard levels lower than 75 ppb (U.S. EPA, 2014c, Chapters 3 and 4).

This document is a prepublication version, signed by EPA Administrator, Gina McCarthy on 10/1/2015. We have taken steps to ensure the accuracy of this version, but it is not the official version.

of specific studies, and the use of information from these studies in the HREA and PA, was considered by CASAC in its review of drafts of the ISA, HREA, and PA. Based on the assessment of the evidence in the ISA, and CASAC's endorsement of the ISA conclusions, as well as CASAC's endorsement of the approaches to using and considering information from epidemiologic studies in the HREA and PA (Frey, 2014c, p. 5), we do not agree with these commenters' conclusions regarding the usefulness of the epidemiologic studies by Strickland et al. (2010), Silverman and Ito (2010), and Mar and Koenig (2009).

More specifically, with regard to confounding by co-pollutants, we note the ISA conclusion that, in studies of O_3-associated hospital admissions and emergency department visits "O_3 effect estimates remained relatively robust upon the inclusion of PM…and gaseous pollutants in two-pollutant models" (U.S. EPA, 2013, pp. 6-152 and 6-153). This conclusion was supported by several studies that evaluated co-pollutant models including, but not limited to, two of the studies specifically highlighted by commenters (i.e., Silverman and Ito, 2010; Strickland et al., 2010) (U.S. EPA, 2013, section 6.2.7.5; Figure 6-20 and Table 6-29).

Other potential uncertainties highlighted by commenters have been evaluated less frequently (e.g., confounding by allergen exposure, respiratory infections). However, we note that Strickland et al. (2010) did consider the potential for pollen (a common airborne allergen) to confound the association between ambient O_3 and emergency department visits. While quantitative results were not presented, the authors reported that "estimates for associations between ambient air pollutant concentrations and pediatric asthma emergency department visits were similar regardless of whether pollen concentrations were included in the model as covariates" (Strickland et al., 2010, p. 309). This suggests a limited impact of aeroallergens on O_3 associations with asthma-related emergency department visits and hospital admissions.

This document is a prepublication version, signed by EPA Administrator, Gina McCarthy on 10/1/2015. We have taken steps to ensure the accuracy of this version, but it is not the official version.

With respect to the comment about epidemiologic studies not controlling for respiratory infections in the model, the EPA disagrees with the commenter's assertion. We recognize that asthma is a multi-etiologic disease and that air pollutants, including O_3, represent only one potential avenue to trigger an asthma exacerbation. Strickland et al. attempted to further clarify the relationship between short-term O_3 exposures and asthma emergency department visits by controlling for the possibility that respiratory infections may lead to an asthma exacerbation. By including the daily count of upper respiratory visits as a covariate in the model, Strickland et al. were able to account for the possibility that respiratory infections contribute to the daily counts of asthma emergency department visits, and to identify the O_3 effect on asthma emergency department visits. In models that controlled for upper respiratory infection visits, associations between O_3 and emergency department visits remained statistically significant (Strickland et al., Table 4 in published study), demonstrating a relatively limited influence of respiratory infections on the association observed between short-term O_3 exposures and asthma emergency department visits, contrary to the commenter's claim.

In addition, with regard to the criticism of the results reported by Mar and Koenig, the EPA disagrees with commenters who questioned the appropriateness of a zero-day lag. These commenters specifically noted uncertainty in the relative timing of the O_3 exposure and the emergency department visit when they occurred on the same day. However, based on the broader body of evidence the ISA concludes that the strongest support is for a relatively immediate respiratory response following O_3 exposures. Specifically, the ISA states that "[t]he collective evidence indicates a rather immediate response within the first few days of O_3 exposure (i.e., for lags days averaged at 0-1, 0-2, and 0-3 days) for hospital admissions and [emergency department] visits for all respiratory outcomes, asthma, and chronic obstructive pulmonary

This document is a prepublication version, signed by EPA Administrator, Gina McCarthy on 10/1/2015. We have taken steps to ensure the accuracy of this version, but it is not the official version.

disease in all-year and seasonal analyses" (U.S. EPA, 2013, p. 2-32). Thus, the use of a zero-day lag is consistent with the broader body of evidence supporting the occurrence of O_3-associated health effects. In addition, while Mar and Koenig reported the strongest associations for zero-day lags, they also reported positive associations for lags ranging from zero to five days (Mar and Koenig, 2009, Table 5 in the published study). In considering this study, the ISA stated that Mar and Koenig (2009) "found consistent positive associations across individual lag days" and that "[f]or children, consistent positive associations were observed across all lags…with the strongest associations observed at lag 0 (33.1% [95% CI: 3.0, 68.5]) and lag 3 (36.8% [95% CI: 6.1, 77.2])" (U.S. EPA, 2013, p. 6-150). Given support for a relatively immediate response to O_3 and given the generally consistent results in analyses using various lags, we disagree with commenters who asserted that the use of a zero-day lag represents an important uncertainty in the interpretation of the study by Mar and Koenig (2009).

Given all of the above, we do not agree with commenters who asserted that uncertainties in the epidemiologic evidence in general, or in specific key studies, should preclude the Administrator from relying on those studies to inform her decisions on the primary O_3 standard.

Some commenters also objected to the characterization in the ISA and the proposal that the results of epidemiologic studies are consistent. These commenters contended that the purported consistency of results across epidemiologic studies is the result of inappropriate selectivity on the part of the EPA in focusing on specific studies and specific results within those studies. In particular, commenters contend that EPA favors studies that show positive associations and selectively ignores certain studies that report null results. They also cite a study published after the completion of the ISA (Goodman et al., 2013) suggesting that, in papers where the results of more than one statistical model are reported, the EPA tends to report the

This document is a prepublication version, signed by EPA Administrator, Gina McCarthy on 10/1/2015. We have taken steps to ensure the accuracy of this version, but it is not the official version.

results with the strongest associations.

The EPA disagrees that it has inappropriately focused on specific positive studies or specific positive results within individual studies. The ISA appropriately builds upon the assessment of the scientific evidence presented in previous AQCDs and ISAs.[99] When evaluating new literature, "[s]election of studies for inclusion in the ISA is based on the general scientific quality of the study, and consideration of the extent to which the study is informative and policy-relevant" (U.S. EPA, 2013, p. liii). In addition, "the intent of the ISA is to provide a concise review, synthesis, and evaluation of the most policy-relevant science to serve as a scientific foundation for the review of the NAAQS, not extensive summaries of all health, ecological and welfare effects studies for a pollutant" (U.S. EPA, 2013, p. lv). Therefore, not all studies published since the previous review would be appropriate for inclusion in the ISA.[100] With regard to the specific studies that are included in the ISA, and the analyses focused upon within given studies, the EPA notes that the ISA undergoes extensive peer review in a public setting by the CASAC. This process provides ample opportunity for CASAC and the public to comment on studies not included in the ISA, and on the specific analyses focused upon within individual

---

[99] Cf. *Coalition for Responsible Regulation v. EPA*, 684 F. 3d 102, 119 (D.C. Cir. 2012) (aff'd in part and rev'd in part on other grounds sub. nom *UARG v. EPA*, S Ct. (2014)) ("EPA simply did here what it and other decision-makers often must do to make a science-based judgment: it sought out and reviewed existing scientific evidence to determine whether a particular finding was warranted. It makes no difference that much of the scientific evidence in large part consisted of 'syntheses' of individual studies and research. Even individual studies and research papers often synthesize past work in an area and then build upon it. That is how science works").

[100] See also section II.C.4.b below responding to comments from environmental interests that EPA inappropriately omitted many studies which (in their view) support establishing a revised standard at a level of 60 ppb or lower. Although, as explained there, the EPA disagrees with these comments, the comments illustrate that the EPA was even-handed in its consideration of the epidemiologic evidence, and most certainly did not select merely studies favorable to the point of view of revising the current standard.

This document is a prepublication version, signed by EPA Administrator, Gina McCarthy on 10/1/2015. We have taken steps to ensure the accuracy of this version, but it is not the official version.

studies. In endorsing the final O_3 ISA as adequate for rule-making purposes, CASAC agreed with the selection and presentation of analyses on which to base the ISA's key conclusions.

iii. Evidence pertaining to at-risk populations and lifestages

A number of groups submitted comments on the EPA's identification of at-risk populations and lifestages. Some industry commenters who opposed revising the current standard disagreed with the EPA's identification of people with asthma or other respiratory diseases as an at-risk population for O_3-attributable effects, citing controlled human exposure studies that did not report larger O_3-induced FEV_1 decrements in people with asthma than in people without asthma. In contrast, comments from medical, environmental, and public health groups generally agreed with the at-risk populations identified by EPA, and also identified other populations that they stated should be considered at risk, including people of lower socio-economic status, people with diabetes or who are obese, pregnant women (due to reproductive and developmental effects, and African American, Asian, Hispanic/Latino or tribal communities. As support for the additional populations, these commenters cited various studies, including some that were not included in the ISA (which we have provisionally considered, as described in section I.C above).

With regard to the former group of comments stating that the evidence does not support the identification of asthmatics as an at-risk population, we disagree. As summarized in the proposal, the EPA's identification of populations at risk of O_3 effects is based on a systematic approach that assesses the current scientific evidence across the relevant scientific disciplines (i.e., exposure sciences, dosimetry, controlled human exposure, toxicology, and epidemiology), with a focus on studies that conducted stratified analyses allowing for an evaluation of different populations exposed to similar O_3 concentrations within the same study design (U.S. EPA, 2013,

This document is a prepublication version, signed by EPA Administrator, Gina McCarthy on 10/1/2015. We have taken steps to ensure the accuracy of this version, but it is not the official version.

pp. 8-1 to 8-3). Based on this established process and framework, the ISA identifies individuals with asthma among the populations and lifestages for which there is "adequate" evidence to support the conclusion of increased risk of O_3-related health effects. Other populations for which the evidence is adequate are individuals with certain genotypes, younger and older age groups, individuals with reduced intake of certain nutrients, and outdoor workers. These conclusions are based on consistency in findings across studies and evidence of coherence in results from different scientific disciplines.

For example, with regard to people with asthma, the ISA notes a number of epidemiologic and controlled human exposure studies reporting larger and/or more serious effects in people with asthma than in people without asthma or other respiratory diseases. These include epidemiologic studies of lung function, respiratory symptoms, and medication use, as well as controlled human exposure studies showing larger inflammatory responses and markers indicating altered immune functioning in people with asthma, and also includes evidence from animal models of asthma that informs the EPA's interpretation of the other studies. We disagree with the industry commenters' focus solely on the results of certain studies without an integrated consideration of the broader body of evidence, and wider range of respiratory endpoints. It is such an integrated approach that supports EPA's conclusion that "there is adequate evidence for asthmatics to be an at-risk population" (U.S. EPA, 2013, section 8.2.2).

We also disagree with commenters' misleading reference to various studies cited to support the claim that asthmatics are not at increased risk of O_3-related health effects. One of the controlled human studies cited in those comments (Mudway et al. 2001) involved asthmatic adults who were older than the healthy controls, and it is well-recognized that responses to O_3 decrease with age (U.S. EPA, 2014c, p. 3-80). Another study (Alexis et al. 2000) used subjects

This document is a prepublication version, signed by EPA Administrator, Gina McCarthy on 10/1/2015. We have taken steps to ensure the accuracy of this version, but it is not the official version.

with mild asthma who are unlikely to be as responsive as people with more severe disease (Horstman et al., 1995) (EPA 2014c, p. 3-80). Controlled human exposure studies and epidemiologic studies of adults and children amply confirm that "there is adequate evidence for asthmatics to be an at-risk population" (U.S. EPA, 2014c, p. 3-81).

We also do not agree with the latter group of commenters that there is sufficient evidence to support the identification of additional populations as at risk of O_3-attributable health effects. Specifically with regard to pregnant women, the ISA concluded that the "evidence is suggestive of a causal relationship between exposures to O_3 and reproductive and developmental effects" including birth outcomes, noting that "the collective evidence for many of the birth outcomes examined is generally inconsistent" (U.S. EPA, 2013, pp. 7-74 and 7-75). At the time of the completion of the ISA, no studies had been identified that examined the relationship between exposure to O_3 and the health of pregnant women (e.g., studies on pre-eclampsia, gestational hypertension). Due to the generally inconsistent epidemiologic evidence for effects on birth outcomes, the lack of studies on the health of pregnant women, and the lack of studies from other disciplines to provide biological plausibility for the effects examined in epidemiologic studies, pregnant women were not considered an at-risk population. Based on the EPA's provisional consideration of studies published since the completion of the ISA (I.C, above), recent studies that examine exposure to O_3 and pre-eclampsia and other health effects experienced by pregnant women are not sufficient to materially change the ISA's conclusions on at-risk populations (I.C, above). In addition, as summarized in the proposal, the ISA concluded that the evidence for other populations was either suggestive of increased risk, with further investigation needed (e.g., other genetic variants, obesity, sex, and socioeconomic status), or was inadequate to determine if they were of increased risk of O_3-related health effects (influenza/infection, COPD, CVD, diabetes,

This document is a prepublication version, signed by EPA Administrator, Gina McCarthy on 10/1/2015. We have taken steps to ensure the accuracy of this version, but it is not the official version.

hyperthyroidism, smoking, race/ethnicity, and air conditioning use) (U.S. EPA, 2013, section 2.5.4.1). The CASAC has concurred with the ISA conclusions (Frey, 2014c).

c. Comments on Exposure and Risk Assessments

This section discusses major comments on the EPA's quantitative assessments of O_3 exposures and health risks, presented in the HREA and considered in the PA, and the EPA's responses to those comments. The focus in this section is on overarching comments related to the EPA's approach to assessing exposures and risks, and to interpreting the exposure/risk results within the context of the adequacy of the current primary O_3 standard. More detailed discussion of comments and Agency responses is provided in the Response to Comments document. Section II.B.2.c.i discusses comments on estimates of O_3 exposures of concern, section II.B.2.c.ii discusses comments on estimates of the risk of O_3-induced lung function decrements, and section II.B.2.b.iii discusses comments on estimates of the risk of O_3-associated mortality and morbidity.

i. O_3 Exposures of Concern

The EPA received a number of comments expressing divergent views on the estimation of, and interpretation of, O_3 exposures of concern. In general, comments from industry, business, and some state groups opposed to revising the current primary O_3 standard asserted that the approaches and assumptions that went into the HREA assessment result in overestimates of O_3 exposures. These commenters highlighted several aspects of the assessment, asserting that the HREA overestimates the proportion of the population expected to achieve ventilation rates high enough to experience an exposure of concern; that the use of out-of-date information on activity patterns results in overestimates of the amount of time people spend being active outdoors; and that exposure estimates do not account for the fact that people spend more time indoors on days with bad air quality (i.e., they engage in averting behavior). In contrast, comments from medical,

This document is a prepublication version, signed by EPA Administrator, Gina McCarthy on 10/1/2015. We have taken steps to ensure the accuracy of this version, but it is not the official version.

public health, and environmental groups that supported revision of the current standard asserted that the HREA assessment of exposures of concern, and the EPA's interpretation of exposure estimates, understates the potential for O_3 exposures that could cause adverse health effects. These commenters claimed that the EPA's focus on 8-hour exposures understates the O_3 impacts on public health since effects in controlled human exposure studies were shown following 6.6-hour exposures; that the HREA exposure estimates do not capture the most highly exposed populations, such as highly active children and outdoor workers; and that the EPA's interpretation of estimated exposures of concern impermissibly relies on the assumption that people stay indoors to avoid dangerous air pollution (i.e., that they engage in averting behavior).

In considering these comments, the EPA first notes that as discussed in the HREA, PA, and the proposal, there are aspects of the exposure assessment that, considered by themselves, can result in either overestimates or underestimates of the occurrence of O_3 exposures of concern. Commenters tended to highlight the aspects of the assessment that supported their positions, including aspects that were discussed in the HREA and/or the PA and that were considered by CASAC. In contrast, commenters tended to ignore the aspects of the assessment that did not support their positions. The EPA has carefully described and assessed the significance of the various uncertainties in the exposure analysis (U.S. EPA, 2014a, Table 5-10), noting that, in most instances, the uncertainties could result in either overestimates or underestimates of exposures and that the magnitudes of the impacts on exposure results were either "low," "low to moderate," or "moderate" (U.S. EPA, 2014a, Table 5-10).

Consistent with the characterization of uncertainties in the HREA, PA, and the proposal, the EPA agrees with some, though not all, aspects of these commenters' views. For example, the EPA agrees with the comment by groups opposed to revision that the equivalent ventilation rate

This document is a prepublication version, signed by EPA Administrator, Gina McCarthy on 10/1/2015. We have taken steps to ensure the accuracy of this version, but it is not the official version.

(EVR) used to characterize individuals as at moderate or greater exertion in the HREA likely leads to overestimates of the number of individuals experiencing exposures of concern (U.S. EPA, 2014a, Table 5-10, p. 5-79). In addition, we note that other physiological processes that are incorporated into exposure estimates are also identified in the HREA as likely leading to overestimates of O_3 exposures, based on comparisons with the available scientific literature (U.S. EPA, 2014a, Table 5-10, p. 5-79). These aspects of the exposure assessment are estimated to have either a "moderate" (i.e., EVR) or a "low to moderate" (i.e., physiological processes) impact on exposure estimates (U.S. EPA, 2014a, Table 5-10, p. 5-79). Focusing on these aspects of the assessment, by themselves, could lead to the conclusion that the HREA overstates the occurrence of O_3 exposures of concern.

However, the EPA notes that there are also aspects of the HREA exposure assessment that, taken by themselves, could lead to the conclusion that the HREA understates the occurrence of O_3 exposures of concern. For example, as noted above, some medical, public health, and environmental groups asserted that the exposure assessment could underestimate O_3 exposures for highly active populations, including outdoor workers and children who spend a large portion of time outdoors during summer. In support of these assertions, commenters highlighted sensitivity analyses conducted in the HREA. However, as noted in the HREA (U.S. EPA, 2014a, Table 5-10), this aspect of the assessment is likely to have a "low to moderate" impact on exposure estimates (i.e., a smaller impact than uncertainty associated with the EVR, and similar in magnitude to uncertainties related to physiological processes, as noted above). Therefore, when considered in the context of all of the uncertainties in exposure estimates, it is unlikely that the HREA's approach to using data on activity patterns leads to overall underestimates of O_3 exposures. The implications of this uncertainty are discussed in more detail below (II.C.4.b),

This document is a prepublication version, signed by EPA Administrator, Gina McCarthy on 10/1/2015. We have taken steps to ensure the accuracy of this version, but it is not the official version.

within the context of the Administrator's decision on a revised standard level.

In addition, medical, public health, and environmental groups also pointed out that the controlled human exposures studies that provided the basis for health effect benchmarks were conducted in healthy adults, rather than at-risk populations, and these studies evaluated 6.6 hour exposures, rather than the 8-hour exposures evaluated in the HREA exposure analyses. They concluded that adverse effects would occur at lower exposure concentrations in at-risk populations, such as people with asthma, and if people were exposed for 8 hours, rather than 6.6 hours. In its review of the PA, CASAC clearly recognized these uncertainties, which provided part of the basis for CASAC's advice to consider exposures of concern for the 60 ppb benchmark. For example, when considering the results of the study by Schelegle et al. (2009) for 6.6-hour exposures to an average O_3 concentration of 72 ppb, CASAC judged that if subjects had been exposed for eight hours, the adverse combination of lung function decrements and respiratory symptoms "could have occurred" at lower O_3 exposure concentrations (Frey, 2014c, p. 5). With regard to at-risk populations, CASAC concluded that "based on results for clinical studies of healthy adults, and scientific considerations of differences in responsiveness of asthmatic children compared to healthy adults, there is scientific support that 60 ppb is an appropriate exposure of concern for asthmatic children" (Frey, 2014c, p. 8). As discussed below (II.B.3, II.C.4.b, II.C.4.c), based in large part on CASAC advice, the Administrator does consider exposure results for the 60 ppb benchmark.

Thus, rather than viewing the potential implications of various aspects of the HREA exposure assessment in isolation, as was done by many commenters, the EPA considers them together, along with other issues and uncertainties related to the interpretation of exposure estimates. As discussed above, CASAC recognized the key uncertainties in exposure estimates, as well as in the interpretation of those estimates in the HREA and PA (Frey, 2014a, c). In its

This document is a prepublication version, signed by EPA Administrator, Gina McCarthy on 10/1/2015. We have taken steps to ensure the accuracy of this version, but it is not the official version.

review of the 2nd draft REA, CASAC concluded that "[t]he discussion of uncertainty and variability is comprehensive, appropriately listing the major sources of uncertainty and their potential impacts on the APEX exposure estimates" (Frey, 2014a, p. 6). Even considering these and other uncertainties, CASAC emphasized estimates of O_3 exposures of concern as part of the basis for their recommendations on the primary O_3 NAAQS. In weighing these uncertainties, which can bias exposure results in different directions but tend to have impacts that are similar in magnitude (U.S. EPA, 2014a, Table 5-10), and in light of CASAC's advice based on its review of the HREA and the PA, the EPA continues to conclude that the approach to considering estimated exposures of concern in the HREA, PA, and the proposal reflects an appropriate balance, and provides an appropriate basis for considering the public health protectiveness of the primary O_3 standard.

The EPA disagrees with other aspects of commenters' views on HREA estimates of exposures of concern. For example, commenters on both sides of the issue objected to the EPA's handling of averting behavior in exposure estimates. Some commenters who supported retaining the current standard claimed that the HREA overstates exposures of concern because available time-location-activity data do not account for averting behavior. These commenters noted sensitivity analyses in the HREA that estimated fewer exposures of concern when averting behavior was considered. In contrast, commenters supporting revision of the standard criticized the EPA's estimates of exposures of concern, claiming that the EPA "emphasizes the role of averting behavior, noting that it may result in an overestimation of exposures of concern, and cites this behavior (essentially staying indoors or not exercising) in order to reach what it deems an acceptable level of risk" (e.g., ALA et al., p. 120).

The EPA disagrees with both of these comments. In brief, the NAAQS must "be

This document is a prepublication version, signed by EPA Administrator, Gina McCarthy on 10/1/2015. We have taken steps to ensure the accuracy of this version, but it is not the official version.

established at a level necessary to protect the health of persons," not the health of persons refraining from normal activity or resorting to medical interventions to ward off adverse effects of poor air quality (S. Rep. No. 11-1196, 91st Cong. 2d Sess. at 10). On the other hand, ignoring normal activity patterns for a pollutant like O_3, where adverse responses are critically dependent on ventilation rates, will result in a standard which provides more protection than is requisite. This issue is discussed in more detail below (II.C.4.b), within the context of the Administrator's decision on a revised standard level.

These commenters also misconstrue the EPA's limited sensitivity analyses on impacts of averting behavior in the HREA. The purpose of the HREA sensitivity analyses was to provide perspective on the potential role of averting behavior in modifying O_3 exposures. These sensitivity analyses were limited to a single urban study area, a 2-day period, and a single air quality adjustment scenario (U.S. EPA, 2014a, section 5.4.3.3). In addition, the approach used in the HREA to simulate averting behavior was itself uncertain, given the lack of actual activity pattern data that explicitly incorporated this type of behavioral response. In light of these important limitations, sensitivity analyses focused on averting behavior were discussed in the proposal within the context of the discussion of uncertainties in the HREA assessment of exposures of concern (II.C.2.b in the proposal) and, contrary to the claims of some commenters, they were not used to support the proposed decision.

Some industry groups also claimed that the time-location-activity diaries used by APEX to estimate exposures are out-of-date, and do not represent activity patterns in the current population. These commenters asserted that the use of out-of-date diary information leads to overestimates in exposures of concern. This issue was explicitly addressed in the HREA and the EPA disagrees with commenters' conclusions. In particular, diary data was updated in this

This document is a prepublication version, signed by EPA Administrator, Gina McCarthy on 10/1/2015. We have taken steps to ensure the accuracy of this version, but it is not the official version.

review to include data from studies published as late as 2010, directly in response to CASAC concerns. In their review of this data, CASAC stated that "[t]he addition of more recent time activity pattern data addresses a concern raised previously by the CASAC concerning how activity pattern information should be brought up to date" (Frey, 2014a, p. 8). As indicated in the HREA (U.S. EPA, 2014a, Appendix 5G, Figures 5G-7 and Figure 5G-8), the majority of diary days used in exposure simulations of children originate from the most recently conducted activity pattern studies (U.S. EPA, 2014a, Table 5-3). In addition, evaluations included in the HREA indicated that there were not major systematic differences in time-location-activity patterns based on information from older diaries versus those collected more recently (U.S. EPA, 2014a, Appendix 5G, Figures 5G-1 and 5G-2). Given all of the above, the EPA does not agree with commenters who claimed that the time-location-activity diaries used by APEX are out-of-date, and result in overestimates of exposures of concern.

ii. Risk of O_3-Induced FEV_1 Decrements

The EPA also received a large number of comments on the FEV_1 risk assessment presented in chapter 6 of the HREA (U.S. EPA, 2014a) and summarized in the proposal (II.C.3.a in the proposal). Commenters representing medical, public health, and environmental groups generally expressed the view that these risk estimates support the need to revise the current primary O_3 standard in order to increase public health protection, though these groups also questioned some of the assumptions inherent in the EPA's interpretation of those risk estimates. For example, ALA et al. (p. 127) stated that "[t]he HREA uses a risk function derived from a controlled human exposure study of healthy young adults to estimate lung function decrements in children, including children with asthma. This assumption could result in an underestimate of risk." On this same issue, commenters representing industry groups opposed to revising the

This document is a prepublication version, signed by EPA Administrator, Gina McCarthy on 10/1/2015. We have taken steps to ensure the accuracy of this version, but it is not the official version.

standard also asserted that assumptions about children's responses to O_3 exposures are highly uncertain. In contrast to medical and public health groups, these commenters concluded that this uncertainty, along with others discussed below, call into question the use of FEV_1 risk estimates to support a decision to revise the current primary O_3 standard.

The EPA agrees that an important source of uncertainty is the approach to estimating the risk of FEV_1 decrements in children and in children with asthma based on data from healthy adults. However, this issue is discussed at length in the HREA and the PA, and was considered carefully by CASAC in its review of draft versions of these documents. The conclusions of the HREA and PA, and the advice of CASAC, were reflected in the Administrator's interpretation of FEV_1 risk estimates in the proposal, as described below. Commenters have not provided additional information that changes the EPA's views on this issue.

As discussed in the proposal (II.C.3.a.ii in the proposal), in the near absence of controlled human exposure data for children, risk estimates are based on the assumption that children exhibit the same lung function response following O_3 exposures as healthy 18-year olds (i.e., the youngest age for which sufficient controlled human exposure data is available) (U.S. EPA, 2014a, section 6.5.3). As noted by CASAC (Frey, 2014a, p. 8), this assumption is justified in part by the findings of McDonnell et al. (1985), who reported that children (8-11 years old) experienced FEV_1 responses similar to those observed in adults (18-35 years old). The HREA concludes that this approach could result in either over- or underestimates of O_3-induced lung function decrements in children, depending on how children compare to the adults used in controlled human exposure studies (U.S. EPA, 2014a, section 6.5.3). With regard to people with asthma, although the evidence has been mixed (U.S. EPA, 2013, section 6.2.1.1), several studies have reported statistically larger, or a tendency for larger, O_3-induced lung function decrements

This document is a prepublication version, signed by EPA Administrator, Gina McCarthy on 10/1/2015. We have taken steps to ensure the accuracy of this version, but it is not the official version.

in asthmatics than in non-asthmatics (Kreit et al., 1989; Horstman et al., 1995; Jorres et al., 1996; Alexis et al., 2000). On this issue, CASAC noted that "[a]sthmatic subjects appear to be at least as sensitive, if not more sensitive, than non-asthmatic subjects in manifesting O_3-induced pulmonary function decrements" (Frey, 2014c, p. 4). To the extent asthmatics experience larger O_3-induced lung function decrements than the healthy adults used to develop exposure-response relationships, the HREA could underestimate the impacts of O_3 exposures on lung function in asthmatics, including asthmatic children (U.S. EPA, 2014a, section 6.5.4). As noted above, these uncertainties have been considered carefully by the EPA and by CASAC during the development of the HREA and PA. In addition, the Administrator has appropriately considered these and other uncertainties in her interpretation of risk estimates, as discussed further below (II.B.3, II.C.4.b, II.C.4.c).

Some commenters additionally asserted that the HREA does not appropriately characterize the uncertainty in risk estimates for O_3-induced lung function decrements. Commenters pointed out that there is statistical uncertainty in model coefficients that is not accounted for in risk estimates. One commenter presented an analysis of this uncertainty, and concluded that there is considerable overlap between risk estimates for standard levels of 75, 70, and 65 ppb, undercutting the confidence in estimated risk reductions for standard levels below 75 ppb.

The Agency recognizes that there are important sources of uncertainty in the FEV_1 risk assessment. In some cases, these sources of uncertainty can contribute to substantial variability in risk estimates, complicating the interpretation of those estimates. For example, as discussed in the proposal, the variability in FEV_1 risk estimates across urban study areas is often greater than the differences in risk estimates between various standard levels (Table 2, above and 79 FR

This document is a prepublication version, signed by EPA Administrator, Gina McCarthy on 10/1/2015. We have taken steps to ensure the accuracy of this version, but it is not the official version.

75306 n. 164). Given this, and the resulting considerable overlap between the ranges of FEV_1 risk estimates for different standard levels, in the proposal the Administrator viewed these risk estimates as providing a more limited basis than exposures of concern for distinguishing between the degree of public health protection provided by alternative standard levels. Thus, although the EPA does not agree with the overall conclusions of industry commenters, their analysis of statistical uncertainty in risk estimates, and the resulting overlap between risk estimates for standard levels of 75, 70, and 65 ppb, tends to reinforce the Administrator's approach, which places greater weight on estimates of O_3 exposures of concern than on risk estimates for O_3-induced FEV_1 decrements.

iii. Risk of O_3-Associated Mortality and Morbidity

In the proposal, the Administrator placed the greatest emphasis on the results of controlled human exposure studies and on quantitative analyses based on information from these studies, and less weight on mortality and morbidity risk assessments based on information from epidemiology studies. The EPA received a number of comments on its consideration of epidemiology-based risks, with some commenters expressing support for the Agency's approach and others expressing opposition.

In general, commenters representing industry organizations or states opposed to revising the current primary O_3 standard agreed with the Administrator's approach in the proposal to viewing epidemiology-based risk estimates, though these commenters reached a different conclusion than the EPA regarding the adequacy of the current standard. In supporting their views, these commenters highlighted a number of uncertainties in the underlying epidemiologic studies, and concluded that risk estimates based on information from such studies do not provide an appropriate basis for revising the current standard. For example, commenters noted

This document is a prepublication version, signed by EPA Administrator, Gina McCarthy on 10/1/2015. We have taken steps to ensure the accuracy of this version, but it is not the official version.

considerable spatial heterogeneity in health effect associations; the potential for co-occurring pollutants (e.g., $PM_{2.5}$) to confound O_3 health effect associations; and the lack of statistically significant O_3 health effect associations in many of the individual cities evaluated as part of multicity analyses. In contrast, some commenters representing medical, public health, or environmental organizations placed greater emphasis than the EPA on epidemiology-based risk estimates. These commenters asserted that risk estimates provide strong support for a lower standard level, and pointed to CASAC advice to support their position.

As in the proposal, the EPA continues to place the greatest weight on the results of controlled human exposure studies and on quantitative analyses based on information from these studies (particularly exposures of concern, as discussed below in II.B.3 and II.C.4), and less weight on risk analyses based on information from epidemiologic studies. In doing so, the Agency continues to note that controlled human exposure studies provide the most certain evidence indicating the occurrence of health effects in humans following specific O_3 exposures. In addition, the effects reported in these studies are due solely to O_3 exposures, and interpretation of study results is not complicated by the presence of co-occurring pollutants or pollutant mixtures (as is the case in epidemiologic studies). The Agency further notes the CASAC judgment that "the scientific evidence supporting the finding that the current standard is inadequate to protect public health is strongest based on the controlled human exposure studies of respiratory effects" (Frey, 2014c, p. 5). Consistent with this emphasis, the HREA conclusions reflect relatively greater confidence in the results of the exposure and risk analyses based on information from controlled human exposure studies than the results of epidemiology-based risk analyses. As discussed in the HREA (U.S. EPA, 2014a, section 9.6), several key uncertainties complicate the interpretation of these epidemiology-based risk estimates, including the

This document is a prepublication version, signed by EPA Administrator, Gina McCarthy on 10/1/2015. We have taken steps to ensure the accuracy of this version, but it is not the official version.

heterogeneity in O_3 effect estimates between locations, the potential for exposure measurement errors in these epidemiologic studies, and uncertainty in the interpretation of the shape of concentration-response functions at lower O_3 concentrations. Commenters who opposed the EPA's approach in the proposal to viewing the results of quantitative analyses tended to highlight aspects of the evidence and CASAC advice that were considered by the EPA at the time of proposal and nothing in these commenters' views has changed those considerations. Therefore, the EPA continues to place the most emphasis on using the information from controlled human exposure studies to inform consideration of the adequacy of the primary O_3 standard.

However, while the EPA agrees that there are important uncertainties in the O_3 epidemiology-based risk estimates, the Agency disagrees with industry commenters that these uncertainties support a conclusion to retain the current standard. As discussed below, the decision to revise the current primary O_3 standard is based on the EPA's consideration of the broad body of scientific evidence, quantitative analyses of O_3 exposures and risks, CASAC advice, and public comments. While recognizing uncertainties in the epidemiology-based risk estimates here, and giving these uncertainties appropriate consideration, the Agency continues to conclude that these risk estimates contribute to the broader body of evidence and information supporting the need to revise the primary O_3 standard.

Some commenters opposed to revising the current O_3 standard highlighted the fact that, in a few urban study locations, larger risks are estimated for standard levels below 75 ppb than for the current standard with its level of 75 ppb. For example, TCEQ (p. 3) states that "differential effects on ozone in urban areas also lead to the EPA's modeled increases in mortality in Houston and Los Angeles with decreasing ozone standards." These commenters

This document is a prepublication version, signed by EPA Administrator, Gina McCarthy on 10/1/2015. We have taken steps to ensure the accuracy of this version, but it is not the official version.

cited such increases in estimated risk as part of the basis for their conclusion that the current standard should be retained.

For communities across the U.S. (including in the Houston and Los Angeles areas), exposure and risk analyses indicate that reducing emissions of O_3 precursors (NO_X, VOCs) to meet a revised standard with a level of 70 ppb will substantially reduce the occurrence of adverse respiratory effects and mortality risk attributable to high O_3 concentrations (U.S. EPA, 2014a, Appendix 9A; U.S. EPA, 2014c, sections 4.4.2.1 to 4.4.2.3). However, because of the complex chemistry governing the formation and destruction of O_3, some NO_X control strategies designed to reduce the highest ambient O_3 concentrations can also result in increases in relatively low ambient O_3 concentrations. As a result of the way the EPA's epidemiology-based risk assessments were conducted (U.S. EPA, 2014a, Chapter 7), increases estimated in low O_3 concentrations impacted mortality and morbidity risks, leading to the estimated risk increases highlighted by some commenters. However, while the EPA is confident that reducing the highest ambient O_3 concentrations will result in substantial improvements in public health, including reducing the risk of O_3-associated mortality, the Agency is far less certain about the public health implications of the changes in relatively low ambient O_3 concentrations (79 FR at 75278/3, 75291/1, and 75308/2). Therefore, reducing precursor emissions to meet a lower O_3 standard is expected to result in important reductions in O_3 concentrations from the part of the air quality distribution where the evidence provides the strongest support for adverse health effects.

Specifically, for area-wide O_3 concentrations at or above 40 ppb,[101] a revised standard

[101] The ISA concludes that there is less certainty in the shape of concentration-response functions for area-wide O_3 concentrations at the lower ends of warm season distributions (i.e., below about 20 to 40 ppb) (U.S. EPA, 2013a, section 2.5.4.4).

This document is a prepublication version, signed by EPA Administrator, Gina McCarthy on 10/1/2015. We have taken steps to ensure the accuracy of this version, but it is not the official version.

with a level of 70 ppb is estimated to reduce the number of premature deaths associated with short-term O_3 concentrations by about 10%, compared to the current standard. In addition, for area-wide concentrations at or above 60 ppb, a revised standard with a level of 70 ppb is estimated to reduce O_3-associated premature deaths by about 50% to 70%.[102] The EPA views these results, which focus on the portion of the air quality distribution where the evidence indicates the most certainty regarding the occurrence of adverse O_3-attributable health effects, not only as supportive of the need to revise the current standard (II.B.3, below), but also as showing the benefits of reducing the peak O_3 concentrations associated with air quality distributions meeting the current standard (II.C.4, below).

In addition, even considering risk estimates based on the full distribution of ambient O_3 concentrations (i.e., estimates influenced by decreases in higher concentrations and increases in lower concentrations), the EPA notes that, compared to the current standard, standards with lower levels are estimated to result in overall reductions in mortality risk across the urban study areas evaluated (U.S. EPA, 2014c, Figure 4-10). As discussed above (II.A.2.a, II.A.2.c), analyses in the HREA indicate that these overall risk reductions could understate the actual reductions that would be experienced by the U.S. population as a whole.

For example, the HREA's national air quality modeling analyses indicate that the HREA urban study areas tend to underrepresent the populations living in areas where reducing NO_X emissions would be expected to result in decreases in warm season averages of daily maximum

[102] Available experimental studies provide the strongest evidence for O_3-induced effects following exposures to O_3 concentrations corresponding to the upper portions of typical ambient distributions. In particular, as discussed above, controlled human exposure studies showing respiratory effects following exposures to O_3 concentrations at or above 60 ppb.

This document is a prepublication version, signed by EPA Administrator, Gina McCarthy on 10/1/2015. We have taken steps to ensure the accuracy of this version, but it is not the official version.

8-hour ambient O_3 concentrations.[103] Given the strong connection between these warm season average O_3 concentrations and risk, risk estimates for the urban study areas are likely to understate the average reductions in O_3-associated mortality and morbidity risks that would be experienced across the U.S. population as a whole upon reducing NO_X emissions (U.S. EPA, 2014a, section 8.2.3.2).

In addition, in recognizing that the reductions in modeled NO_X emissions used in the HREA's core analyses are meant to be illustrative, rather than to imply a particular control strategy for meeting a revised O_3 NAAQS, the HREA also conducted sensitivity analyses in which both NO_X and VOC emissions reductions were evaluated. In all of the urban study areas evaluated in these analyses, the increases in low O_3 concentrations were smaller for the NO_X/VOC emission reduction scenarios than the NO_X only emission reduction scenario (U.S. EPA, 2014a, Appendix 4D, section 4.7). This was most apparent for Denver, Houston, Los Angeles, New York, and Philadelphia. These results suggest that in some locations, optimized emissions reduction strategies could result in larger reductions in O_3-associated mortality and morbidity than indicated by HREA's core estimates.

Thus, the patterns of estimated mortality and morbidity risks across various air quality scenarios and locations have been evaluated and considered extensively in the HREA and the PA, as well as in the proposal. Epidemiology-based risk estimates have also been considered by CASAC, and those considerations are reflected in CASAC's advice. Specifically, in considering epidemiology-based risk estimates in its review of the REA, CASAC stated that "[a]lthough

[103] Specifically, the HREA urban study areas tend to underrepresent populations living in suburban, smaller urban, and rural areas, where reducing NO_X emissions would be expected to result in decreases in warm season averages of daily maximum 8-hour ambient O_3 concentrations (U.S. EPA, 2014a, section 8.2.3.2).

This document is a prepublication version, signed by EPA Administrator, Gina McCarthy on 10/1/2015. We have taken steps to ensure the accuracy of this version, but it is not the official version.

these estimates for short-term exposure impacts are subject to uncertainty, the CASAC is confident that that the evidence of health effects of O_3 presented in the ISA and Second Draft HREA in its totality, indicates that there are meaningful reductions in mean, absolute, and relative premature mortality associated with short-term exposures to O_3 levels lower than the current standard" (Frey, 2014a, p. 3). Commenters' views on this issue are not based on new information, but on an interpretation of the analyses presented in the HREA that is different from the EPA's, and CASAC's, interpretation. Given this, the EPA's considerations and conclusions related to this issue, as described in the proposal and as summarized briefly above, remain valid. Therefore, the EPA does not agree with commenters who cited increases in estimated risk in some locations as supporting a conclusion that the current standard should be retained.

For risk estimates of respiratory mortality associated with long-term O_3, several industry commenters supported placing more emphasis on threshold models, and including these models as part of the core analyses rather than as sensitivity analyses. The EPA agrees with these commenters that an important uncertainty in risk estimates of respiratory mortality associated with long-term O_3 stems from the potential for the existence of a threshold. Based on sensitivity analyses included in the HREA in response to CASAC advice, the existence of a threshold could substantially reduce estimated risks. CASAC discussed this issue at length during its review of the REA and supported the EPA's approach to including a range of threshold models as sensitivity analyses (Frey, 2014a p. 3). Based in part on uncertainty in the existence and identification of a threshold, the HREA concluded that lower confidence should be placed in risk estimates for respiratory mortality associated with long-term O_3 exposures (U.S. EPA, 2014a, section 9.6). This uncertainty was also a key part of the Administrator's rationale for placing only limited emphasis on risk estimates for long-term O_3 exposures. In her final decisions,

This document is a prepublication version, signed by EPA Administrator, Gina McCarthy on 10/1/2015. We have taken steps to ensure the accuracy of this version, but it is not the official version.

discussed below (II.B.3, II.C.4.b, II.C.4.c), the Administrator continues to place only limited emphasis on these estimates. The EPA views this approach to considering risk estimates for respiratory mortality as generally consistent with the approach supported by the commenters noted above.

3. Administrator's Conclusions on the Need for Revision

This section discusses the Administrator's conclusions related to the adequacy of the public health protection provided by the current primary O_3 standard, and her final decision that the current standard is not requisite to protect public health with an adequate margin of safety. These conclusions, and her final decision, are based on the Administrator's consideration of the available scientific evidence assessed in the ISA (U.S. EPA, 2013), the exposure/risk information presented and assessed in the HREA (U.S. EPA, 2014a), the consideration of that evidence and information in the PA (U.S. EPA, 2014c), the advice of CASAC, and public comments received on the proposal.

As an initial matter, the Administrator concludes that reducing precursor emissions to achieve O_3 concentrations that meet the current primary O_3 standard will provide important improvements in public health protection, compared to recent air quality. In reaching this conclusion, she notes the discussion in section 3.4 of the PA (U.S. EPA, 2014c). In particular, the Administrator notes that this conclusion is supported by (1) the strong body of scientific evidence indicating a wide range of adverse health outcomes attributable to exposures to O_3 at concentrations commonly found in the ambient air and (2) estimates indicating decreased occurrences of O_3 exposures of concern and decreased O_3-associated health risks upon meeting the current standard, compared to recent air quality. Thus, she concludes that it would not be appropriate in this review to consider a standard that is less protective than the current standard.

This document is a prepublication version, signed by EPA Administrator, Gina McCarthy on 10/1/2015. We have taken steps to ensure the accuracy of this version, but it is not the official version.

After reaching the conclusion that meeting the current primary O_3 standard will provide important improvements in public health protection, and that it is not appropriate to consider a standard that is less protective than the current standard, the Administrator next considers the adequacy of the public health protection that is provided by the current standard. In doing so, the Administrator first notes that studies evaluated since the completion of the 2006 AQCD support and expand upon the strong body of evidence that, in the last review, indicated a causal relationship between short-term O_3 exposures and respiratory morbidity outcomes (U.S. EPA, 2013, section 2.5). This is the strongest causality finding possible under the ISA's hierarchical system for classifying weight of evidence for causation. In addition, the Administrator notes that the evidence for respiratory health effects attributable to long-term O_3 exposures, including the development of asthma in children, is much stronger than in previous reviews, and the ISA concludes that there is "likely to be" a causal relationship between such O_3 exposures and adverse respiratory health effects (the second strongest causality finding).

Together, experimental and epidemiologic studies support conclusions regarding a continuum of O_3 respiratory effects ranging from small, reversible changes in pulmonary function, and pulmonary inflammation, to more serious effects that can result in respiratory-related emergency department visits, hospital admissions, and premature mortality. Recent animal toxicology studies support descriptions of modes of action for these respiratory effects and augment support for biological plausibility for the role of O_3 in reported effects. With regard to mode of action, evidence indicates that the initial key event is the formation of secondary oxidation products in the respiratory tract, that antioxidant capacity may modify the risk of respiratory morbidity associated with O_3 exposure, and that the inherent capacity to quench (based on individual antioxidant capacity) can be overwhelmed, especially with exposure to

This document is a prepublication version, signed by EPA Administrator, Gina McCarthy on 10/1/2015. We have taken steps to ensure the accuracy of this version, but it is not the official version.

elevated concentrations of O_3.

In addition, based on the consistency of findings across studies and the coherence of results from different scientific disciplines, the available evidence indicates that certain populations are at increased risk of experiencing O_3-related effects, including the most severe effects. These include populations and lifestages identified in previous reviews (i.e., people with asthma, children, older adults, outdoor workers) and populations identified since the last review (i.e., people with certain genotypes related to antioxidant and/or anti-inflammatory status; people with reduced intake of certain antioxidant nutrients, such as Vitamins C and E).

In considering the O_3 exposure concentrations reported to elicit respiratory effects, as in the proposal, the Administrator agrees with the conclusions of the PA that controlled human exposure studies provide the most certain evidence indicating the occurrence of health effects in humans following specific O_3 exposures. In particular, she notes that the effects reported in controlled human exposure studies are due solely to O_3 exposures, and interpretation of study results is not complicated by the presence of co-occurring pollutants or pollutant mixtures (as is the case in epidemiologic studies). Therefore, consistent with CASAC advice (Frey, 2014c), she places the most weight on information from controlled human exposure studies in reaching conclusions on the adequacy of the current primary O_3 standard.

In considering the evidence from controlled human exposure studies, the Administrator first notes that these studies have reported a variety of respiratory effects in healthy adults following exposures to O_3 concentrations of 60, 63, [104] 72,[105] or 80 ppb, and higher. The largest

[104] For a 60 ppb target exposure concentration, Schelegle et al. (2009) reported that the actual 6.6-hour mean exposure concentration was 63 ppb.
[105] For a 70 ppb target exposure concentration, Schelegle et al. (2009) reported that the actual 6.6-hour mean exposure concentration was 72 ppb.

This document is a prepublication version, signed by EPA Administrator, Gina McCarthy on 10/1/2015. We have taken steps to ensure the accuracy of this version, but it is not the official version.

respiratory effects, and the broadest range of effects, have been studied and reported following exposures of healthy adults to 80 ppb O_3 or higher, with most exposure studies conducted at these higher concentrations. As discussed above (II.A.1), the Administrator further notes that recent evidence includes controlled human exposure studies reporting the combination of lung function decrements and respiratory symptoms in healthy adults engaged in moderate exertion following 6.6-hour exposures to concentrations as low as 72 ppb, and lung function decrements and pulmonary inflammation following exposures to O_3 concentrations as low as 60 ppb.

As discussed in her response to public comments above (II.B.2.b.i), and in detail below (II.C.4.b, II.C.4.c), the Administrator concludes that these controlled human exposure studies indicate that adverse effects are likely to occur following exposures to O_3 concentrations below the level of the current standard. The effects observed following such exposures are coherent with the serious health outcomes that have been reported in O_3 epidemiologic studies (e.g., respiratory-related hospital admissions, emergency department visits), and the Administrator judges that such effects have the potential to be important from a public health perspective.

In reaching these conclusions, she particularly notes that the combination of lung function decrements and respiratory symptoms reported to occur in healthy adults following exposures to 72 ppb O_3 meets ATS criteria for an adverse response (II.B.2.b.i, above). In specifically considering the 72 ppb exposure concentration, CASAC noted that "the combination of decrements in FEV_1 together with the statistically significant alterations in symptoms in human subjects exposed to 72 ppb ozone meets the American Thoracic Society's definition of an adverse health effect" (Frey, 2014c, p. 5). In addition, given that the controlled human exposure study reporting these results was conducted in healthy adults, CASAC judged that the adverse combination of lung function decrements and respiratory symptoms "almost certainly occur in

This document is a prepublication version, signed by EPA Administrator, Gina McCarthy on 10/1/2015. We have taken steps to ensure the accuracy of this version, but it is not the official version.

some people" (e.g., people with asthma) following exposures to lower O_3 concentrations (Frey, 2014c, p. 6).

While the Administrator is less certain regarding the adversity of the lung function decrements and airway inflammation that have been observed following exposures as low as 60 ppb, as discussed in more detail elsewhere in this preamble (II.B.2.b.i, II.C.4.b, II.C.4.c), she judges that these effects also have the potential to be adverse, and to be of public health importance, particularly if they are experienced repeatedly. With regard to this judgment, she specifically notes the ISA conclusion that, while the airway inflammation induced by a single exposure (or several exposures over the course of a summer) can resolve entirely, continued inflammation could potentially result in adverse effects, including the induction of a chronic inflammatory state; altered pulmonary structure and function, leading to diseases such as asthma; altered lung host defense response to inhaled microorganisms; and altered lung response to other agents such as allergens or toxins (U.S. EPA, 2013, section 6.2.3). Thus, the Administrator becomes increasingly concerned about the potential for adverse effects at 60 ppb O_3 as the number of exposures increases, though she notes that the available evidence does not indicate a particular number of occurrences of such exposures that would be required to achieve an adverse respiratory effect, and that this number is likely to vary across the population.

In addition to controlled human exposure studies, the Administrator also considers what the available epidemiologic evidence indicates with regard to the adequacy of the public health protection provided by the current primary O_3 standard. She notes that recent epidemiologic studies provide support, beyond that available in the last review, for associations between short-term O_3 exposures and a wide range of adverse respiratory outcomes (including respiratory-related hospital admissions, emergency department visits, and mortality) and with total mortality.

This document is a prepublication version, signed by EPA Administrator, Gina McCarthy on 10/1/2015. We have taken steps to ensure the accuracy of this version, but it is not the official version.

As discussed above in the EPA responses to public comments (II.B.2.b.ii), associations with morbidity and mortality are stronger during the warm or summer months, and remain robust after adjustment for copollutants (U.S. EPA, 2013, Chapter 6).

In considering information from epidemiologic studies within the context of her conclusions on the adequacy of the current standard, the Administrator specifically considers analyses in the PA that evaluate the extent to which O_3 health effect associations have been reported for air quality concentrations likely to be allowed by the current standard. She notes that such analyses can provide insight into the extent to which the current standard would allow the distributions of ambient O_3 concentrations that provided the basis for these health effect associations. While the majority of O_3 epidemiologic studies evaluated in the PA were conducted in areas that would have violated the current standard during study periods, as discussed above (II.B.2.b.ii), the Administrator observes that the study by Mar and Koenig (2009) reported associations between short-term O_3 concentrations and asthma emergency department visits in children and adults in a U.S. location that would have met the current O_3 standard over the entire study period.[106] Based on this, she notes the conclusion from the PA that the current primary O_3 standard would have allowed the distribution of ambient O_3 concentrations that provided the basis for the associations with asthma emergency department visits reported by Mar and Koenig (2009) (U.S. EPA, 2014c, section 3.1.4.2).

In addition, even in some single-city study locations where the current standard was violated (i.e., those evaluated in Silverman and Ito, 2010; Strickland et al., 2010), the

[106] The large majority of locations evaluated in U.S. epidemiologic studies of long-term O_3 would have violated the current standard during study periods, thus providing limited insight into the adequacy of the current standard (U.S. EPA, 2014c, section 3.1.4.3).

This document is a prepublication version, signed by EPA Administrator, Gina McCarthy on 10/1/2015. We have taken steps to ensure the accuracy of this version, but it is not the official version.

Administrator notes that PA analyses of reported concentration-response functions and available air quality data support the occurrence of O_3-attributable hospital admissions and emergency department visits on subsets of days with virtually all ambient O_3 concentrations below the level of the current standard. PA analyses of study area air quality further support the conclusion that exposures to the ambient O_3 concentrations present in the locations evaluated by Strickland et al. (2010) and Silverman and Ito (2010) could have plausibly resulted in the respiratory-related emergency department visits and hospital admissions reported in these studies (U.S. EPA, 2014c, section 3.1.4.2). The Administrator agrees with the PA conclusion that these analyses indicate a relatively high degree of confidence in reported statistical associations with respiratory health outcomes on days when virtually all monitored 8-hour O_3 concentrations were 75 ppb or below. She further agrees with the PA conclusion that although these analyses do not identify true design values, the presence of O_3-associated respiratory effects on such days provides insight into the types of health effects that could occur in locations with maximum ambient O_3 concentrations below the level of the current standard.

Compared to the single-city epidemiologic studies discussed above, the Administrator notes additional uncertainty in interpreting the relationships between short-term O_3 air quality in individual study cities and reported O_3 multicity effect estimates. In particular, she judges that the available multicity effect estimates in studies of short-term O_3 do not provide a basis for considering the extent to which reported O_3 health effect associations are influenced by individual locations with ambient O_3 concentrations low enough to meet the current O_3 standard,

This document is a prepublication version, signed by EPA Administrator, Gina McCarthy on 10/1/2015. We have taken steps to ensure the accuracy of this version, but it is not the official version.

versus locations with O_3 concentrations that violate this standard.[107] While such uncertainties limit the extent to which the Administrator bases her conclusions on air quality in locations of multicity epidemiologic studies, she does note that O_3 associations with respiratory morbidity or premature mortality have been reported in several multicity studies when the majority of study locations (though not all study locations) would have met the current O_3 standard (U.S. EPA, 2014c, section 3.1.4.2).

Looking across the body of epidemiologic evidence, the Administrator thus reaches the conclusion that analyses of air quality in study locations support the occurrence of adverse O_3-associated effects at ambient O_3 concentrations that met, or are likely to have met, the current standard. She further concludes that the strongest support for this conclusion comes from single-city studies of respiratory-related hospital admissions and emergency department visits associated with short-term O_3 concentrations, with some support also from multicity studies of morbidity or mortality.

Taken together, the Administrator concludes that the scientific evidence from controlled human exposure and epidemiologic studies calls into question the adequacy of the public health protection provided by the current standard. In reaching this conclusion, she particularly notes that the current standard level is higher than the lowest O_3 exposure concentration shown to

[107] As noted in the proposal (II.E.4.d), this uncertainty applies specifically to interpreting air quality analyses within the context of multicity effect estimates for short-term O_3 concentrations, where effect estimates for individual study cities are not presented (as is the case for the key O_3 studies analyzed in the PA, with the exception of the study by Stieb et al. (2009) where none of the city-specific effect estimates for asthma emergency department visits were statistically significant). This specific uncertainty does not apply to multicity epidemiologic studies of long-term O_3 concentrations, where multicity effect estimates are based on comparisons across cities. For example, see discussion of study by Jerrett et al. (2009) in the PA (U.S. EPA, 2014c, section 3.1.4.3).

This document is a prepublication version, signed by EPA Administrator, Gina McCarthy on 10/1/2015. We have taken steps to ensure the accuracy of this version, but it is not the official version.

result in the adverse combination of lung function decrements and respiratory symptoms (i.e., 72 ppb), and that CASAC concluded that such effects "almost certainly occur in some people" following exposures to O_3 concentrations below 72 ppb (Frey, 2014c, p. 6). While she also notes that the current standard level is well-above the lowest O_3 exposure concentration shown to cause respiratory effects (i.e., 60 ppb), she has less confidence that the effects observed at 60 ppb are adverse (discussed in II.B.2.b.i, II.C.4.b, II.C.4.c). She further considers these effects, and the extent to which the current primary O_3 standard could protect against them, within the context of quantitative analyses of O_3 exposures (discussed below). With regard to the available epidemiologic evidence, the Administrator notes PA analyses of O_3 air quality indicating that, while most O_3 epidemiologic studies reported health effect associations with ambient O_3 concentrations that violated the current standard, a small number of single-city U.S. studies support the occurrence of asthma-related hospital admissions and emergency department visits at ambient O_3 concentrations below the level of the current standard, including one study with air quality that would have met the current standard during the study period. Some support for such O_3 associations is also provided by multicity studies of morbidity or mortality. The Administrator further judges that the biological plausibility of associations with clearly adverse morbidity effects is supported by the evidence noted above from controlled human exposure studies conducted at, or in some cases below, typical warm-season ambient O_3 concentrations.

Beyond her consideration of the scientific evidence, the Administrator also considers the results of the HREA exposure and risk analyses in reaching final conclusions regarding the adequacy of the current primary O_3 standard. In doing so, consistent with her consideration of the evidence, she focuses primarily on quantitative analyses based on information from controlled human exposure studies (i.e., exposures of concern and risk of O_3-induced FEV_1

This document is a prepublication version, signed by EPA Administrator, Gina McCarthy on 10/1/2015. We have taken steps to ensure the accuracy of this version, but it is not the official version.

decrements). Consistent with the considerations in the PA, and with CASAC advice (Frey, 2014c), she particularly focuses on exposure and risk estimates in children.[108] As discussed in the HREA and PA (and II.B, above), the patterns of exposure and risk estimates across urban study areas, across years, and across air quality scenarios are similar in children and adults though, because children spend more time being physically active outdoors and are more likely to experience the types of O_3 exposures shown to cause respiratory effects, larger percentages of children are estimated to experience exposures of concern and O_3-induced FEV_1 decrements. Children also have intrinsic risk factors that make them particularly susceptible to O_3-related effects (e.g., higher ventilation rates relative to lung volume) (U.S. EPA, 2013, section 8.3.1.1; see section II.A.1.d above). In focusing on exposure and risk estimates in children, the Administrator recognizes that the exposure patterns for children across years, urban study areas, and air quality scenarios are indicative of the exposure patterns in a broader group of at-risk populations that also includes asthmatic adults and older adults. She judges that, to the extent the primary O_3 standard provides appropriate protection for children, it will also do so for adult populations,[109] given the larger exposures and intrinsic risk factors in children.

In first considering estimates of exposures of concern, the Administrator considers the

[108] She focuses on estimates for all children and estimates for children with asthma, noting that exposure and risk estimates for these groups are virtually indistinguishable in terms of the percent estimated to experience exposures of concern or O_3-induced FEV_1 decrements (U.S. EPA, 2014c, sections 3.2 and 4.4.2).

[109] As noted below (II.C.4.2), this includes populations of highly active adults, such as outdoor workers. Limited sensitivity analyses in the HREA indicate that when diaries were selected to mimic exposures that could be experienced by outdoor workers, the percentages of modeled individuals estimated to experience exposures of concern were generally similar to the percentages estimated for children (i.e., using the full database of diary profiles) in the urban study areas and years with the largest exposure estimates (U.S. EPA, 2014, section 5.4.3.2, Figure 5-14).

This document is a prepublication version, signed by EPA Administrator, Gina McCarthy on 10/1/2015. We have taken steps to ensure the accuracy of this version, but it is not the official version.

extent to which estimates indicate that the current standard limits population exposures to the broader range of O_3 concentrations shown in controlled human exposure studies to cause respiratory effects. In doing so, she focuses on estimates of O_3 exposures of concern at or above the benchmark concentrations of 60, 70, and 80 ppb. She notes that the current O_3 standard can provide some protection against exposures of concern to a range of O_3 concentrations, including concentrations below the standard level, given that (1) with the current 4th high form, most days will have concentrations below the standard level and that (2) exposures of concern depend on both the presence of relatively high ambient O_3 concentrations and on activity patterns in the population that result in exposures to such high concentrations while at an elevated ventilation rate (discussed in detail below, II.C.4.b and II.C.4.c).

In considering estimates of O_3 exposures of concern allowed by the current standard, she notes that while single exposures of concern could be adverse for some people, particularly for the higher benchmark concentrations (70, 80 ppb) where there is stronger evidence for the occurrence of adverse effects (II.B.2.b.i, II.C.4.b, II.C.4.c, below), she becomes increasingly concerned about the potential for adverse responses as the number of occurrences increases.[110] In particular, as discussed above with regard to inflammation, she notes that the types of lung injury shown to occur following exposures to O_3 concentrations from 60 to 80 ppb, particularly if experienced repeatedly, provide a mode of action by which O_3 may cause other more serious effects (e.g., asthma exacerbations). Therefore, the Administrator places the most weight on estimates of two or more exposures of concern (i.e., as a surrogate for the occurrence of repeated

[110] Not all people who experience an exposure of concern will experience an adverse effect (even members of at-risk populations). For the endpoints evaluated in controlled human exposure studies, the number of those experiencing exposures of concern who will experience adverse effects cannot be reliably quantified.

This document is a prepublication version, signed by EPA Administrator, Gina McCarthy on 10/1/2015. We have taken steps to ensure the accuracy of this version, but it is not the official version.

exposures), though she also considers estimates of one or more exposures for the 70 and 80 ppb benchmarks.

In considering estimates of exposures of concern, the Administrator first notes that if the 15 urban study areas evaluated in the HREA were to just meet the current O_3 standard, fewer than 1% of children in those areas would be estimated to experience two or more exposures of concern at or above 70 ppb, based on exposure estimates averaged over the years of analysis, though up to about 2% would be estimated to experience such exposures in the worst-case year and location (i.e., year and location with the largest exposure estimates).[111] Although the Administrator is less concerned about single occurrences of exposures of concern, she notes that even single occurrences could cause adverse effects in some people, particularly for the 70 and 80 ppb benchmarks.[112] As illustrated in Table 1 (above), the current standard could allow up to about 3% of children to experience one or more exposures of concern at or above 70 ppb, averaged over the years of analysis, and up to about 8% in the worst-case year and location. In addition, in the worst-case year and location, the current standard could allow about 1% of children to experience at least one exposure of concern at or above 80 ppb, the highest benchmark evaluated.

While the Administrator has less confidence in the adversity of the effects observed following exposures to 60 ppb O_3 (II.B.2.b.i, II.C.4.b, II.C.4.c), particularly for single exposures, she judges that the potential for adverse effects increases as the number of exposures of concern

[111] Virtually no children in those areas would be estimated to experience two or more exposures of concern at or above 80 ppb.
[112] That is, adverse effects are a possible outcome of single exposures of concern at/above 70 or 80 ppb, though the available information is not sufficient to estimate the likelihood of such effects.

This document is a prepublication version, signed by EPA Administrator, Gina McCarthy on 10/1/2015. We have taken steps to ensure the accuracy of this version, but it is not the official version.

increases. With regard to the 60 ppb benchmark, she particularly notes that the current standard is estimated to allow approximately 3 to 8% of children in urban study areas, including approximately 3 to 8% of asthmatic children, to experience two or more exposures of concern to O_3 concentrations at or above 60 ppb, based on estimates averaged over the years of analysis. To provide some perspective on the average percentages estimated, the Administrator notes that they correspond to almost 900,000 children in urban study areas, including about 90,000 asthmatic children. Nationally, if the current standard were to be just met, the number of children experiencing such exposures would be larger.

Based on her consideration of these estimates within the context of her judgments on adversity, as discussed in her responses to public comments (II.B.2.b.i, II.C.4.b), the Administrator concludes that the exposures projected to remain upon meeting the current standard can reasonably be judged to be important from a public health perspective. In particular, given that the average percent of children estimated to experience two or more exposures of concern for the 60 ppb benchmark approaches 10% in some areas, even based on estimates averaged over the years of the analysis, she concludes that the current standard does not incorporate an adequate margin of safety against the potentially adverse effects that can occur following repeated exposures at or above 60 ppb. Although she has less confidence that the effects observed at 60 ppb are adverse, compared to the effects at and above 72 ppb, she judges that this approach to considering the results for the 60 ppb benchmark is appropriate given CASAC advice, which clearly focuses the EPA on considering the effects observed at 60 ppb (Frey, 2014c) (II.C.4.b, II.C.4.c below).[113] This approach to considering estimated exposures of

[113] Though this advice is less clear regarding the adversity of effects at 60 ppb than CASAC's advice regarding the adversity of effects at 72 ppb (II.C.4.b, II.C.4.c).

This document is a prepublication version, signed by EPA Administrator, Gina McCarthy on 10/1/2015. We have taken steps to ensure the accuracy of this version, but it is not the official version.

concern is consistent with setting standards that provide some safeguard against dangers to human health that are not fully certain (i.e., standards that incorporate an adequate margin of safety) (See, e.g., *State of Mississippi*, 744 F. 3d at 1353).

In addition to estimated exposures of concern, the Administrator also considers HREA estimates of the risk of O_3-induced FEV_1 decrements ≥ 10 and 15%. In doing so, she particularly notes CASAC advice that "estimation of FEV_1 decrements of ≥ 15% is appropriate as a scientifically relevant surrogate for adverse health outcomes in active healthy adults, whereas an FEV_1 decrement of ≥ 10% is a scientifically relevant surrogate for adverse health outcomes for people with asthma and lung disease" (Frey, 2014c, p. 3). The Administrator notes that while single occurrences of O_3-induced lung function decrements could be adverse for some people, as discussed above (II.B.1), she agrees with the judgment in past reviews that a more general consensus view of the potential adversity of such decrements emerges as the frequency of occurrences increases. Therefore, as in the proposal, the Administrator focuses primarily on the estimates of two or more O_3-induced lung function decrements. When averaged over the years evaluated in the HREA, the Administrator notes that the current standard is estimated to allow about 1 to 3% of children in the 15 urban study areas (corresponding to almost 400,000 children) to experience two or more O_3-induced lung function decrements ≥ 15%, and to allow about 8 to 12% of children (corresponding to about 180,000 asthmatic children) to experience two or more O_3-induced lung function decrements ≥ 10%.

In further considering the HREA results, the Administrator considers the epidemiology-based risk estimates. As discussed in the proposal, compared to the weight given to HREA estimates of exposures of concern and lung function risks, she places relatively less weight on epidemiology-based risk estimates. In giving some consideration to these risk estimates, as

This document is a prepublication version, signed by EPA Administrator, Gina McCarthy on 10/1/2015. We have taken steps to ensure the accuracy of this version, but it is not the official version.

discussed in the proposal and above in the EPA's responses to public comments (II.B.2.b.iii), the Administrator focuses on the risks associated with O_3 concentrations in the upper portions of ambient distributions. In doing so, she notes the increasing uncertainty associated with the shapes of concentration-response curves for O_3 concentrations in the lower portions of ambient distributions and the evidence from controlled human exposure studies, which provide the strongest support for O_3-induced effects following exposures to O_3 concentrations corresponding to the upper portions of typical ambient distributions (i.e., 60 ppb and above). Even when considering only area-wide O_3 concentrations from the upper portions of seasonal distributions (i.e., ≥ 40, 60 ppb, Table 3 in the proposal), the Administrator notes that the general magnitude of mortality risk estimates suggests the potential for a substantial number of O_3-associated deaths and adverse respiratory events to occur nationally, even when the current standard is met (79 FR 75277 and II.B.2.c.iii above).

In addition to the evidence and exposure/risk information discussed above, the Administrator also takes note of the CASAC advice in the current review, in the 2008 review and decision establishing the current standard, and in the 2010 reconsideration of the 2008 decision. As discussed in more detail above, the current CASAC "finds that the current NAAQS for ozone is not protective of human health" and "unanimously recommends that the Administrator revise the current primary ozone standard to protect public health" (Frey, 2014c, p. 5). The prior CASAC O_3 Panel likewise recommended revision of the current standard to one with a lower level due to the lack of protectiveness of the current standard. This earlier recommendation was based entirely on the evidence and information in the record for the 2008 standard decision, which, as discussed above, has been substantially strengthened in the current review (Samet, 2011; Frey and Samet, 2012).

This document is a prepublication version, signed by EPA Administrator, Gina McCarthy on 10/1/2015. We have taken steps to ensure the accuracy of this version, but it is not the official version.

In consideration of all of the above, the Administrator concludes that the current primary O_3 standard is not requisite to protect public health with an adequate margin of safety, and that it should be revised to provide increased public health protection. This decision is based on the Administrator's conclusions that the available evidence and exposure and risk information clearly call into question the adequacy of public health protection provided by the current primary standard such that it is not appropriate, within the meaning of section 109 (d) (1) of the Act, to retain the current standard. With regard to the evidence, she particularly notes that the current standard level is higher than the lowest O_3 exposure concentration shown to result in the adverse combination of lung function decrements and respiratory symptoms (i.e., 72 ppb), and also notes CASAC's advice that at-risk groups (e.g., people with asthma) could experience adverse effects following exposure to lower concentrations. In addition, while the Administrator is less certain about the adversity of the effects that occur following lower exposure concentrations, she judges that recent controlled human exposure studies at 60 ppb provide support for a level below 75 ppb in order to provide an increased margin of safety, compared to the current standard, against effects with the potential to be adverse, particularly if they are experienced repeatedly. With regard to O_3 epidemiologic studies, she notes that while most available studies reported health effect associations with ambient O_3 concentrations that violated the current standard, a small number provide support for the occurrence of adverse respiratory effects at ambient O_3 concentrations below the level of the current standard.[114]

Based on the analyses in the HREA, the Administrator concludes that the exposures and

[114] Courts have repeatedly held that this type of evidence justifies an Administrator's conclusion that it is "appropriate" (within the meaning of section 109 (d)(1) of the CAA) to revise a primary NAAQS to provide further protection of public health. See e.g. *Mississippi*, 744 F. 3d at 1345; *American Farm Bureau*, 559 F. 3d at 525-26.

This document is a prepublication version, signed by EPA Administrator, Gina McCarthy on 10/1/2015. We have taken steps to ensure the accuracy of this version, but it is not the official version.

risks projected to remain upon meeting the current standard can reasonably be judged to be important from a public health perspective. In particular, this conclusion is based on her judgment that it is appropriate to set a standard that would be expected to eliminate, or almost eliminate, exposures of concern at or above 70 and 80 ppb. In addition, given that the average percent of children estimated to experience two or more exposures of concern for the 60 ppb benchmark approaches 10% in some urban study areas, the Administrator concludes that the current standard does not incorporate an adequate margin of safety against the potentially adverse effects that could occur following repeated exposures at or above 60 ppb. Beyond estimated exposures of concern, the Administrator concludes that the HREA risk estimates (FEV_1 risk estimates, mortality risk estimates) further support a conclusion that the O_3-associated health effects estimated to remain upon just meeting the current standard are an issue of public health importance on a broad national scale. Thus, she concludes that O_3 exposure and risk estimates, when taken together, support a conclusion that the exposures and health risks associated with just meeting the current standard can reasonably be judged important from a public health perspective, such that the current standard is not sufficiently protective and does not incorporate an adequate margin of safety.

In the next section, the Administrator considers what revisions are appropriate in order to set a standard that is requisite to protect public health with an adequate margin of safety.

C. Conclusions on the Elements of a Revised Primary Standard

Having reached the conclusion that the current O_3 standard is not requisite to protect public health with an adequate margin of safety, based on the currently available scientific evidence and exposure/risk information, the Administrator next considers the range of alternative standards supported by that evidence and information. Consistent with her consideration of the

This document is a prepublication version, signed by EPA Administrator, Gina McCarthy on 10/1/2015. We have taken steps to ensure the accuracy of this version, but it is not the official version.

adequacy of the current standard, the Administrator's conclusions on the elements of the primary standard are informed by the available scientific evidence assessed in the ISA, exposure/risk information presented and assessed in the HREA, the evidence-based and exposure-/risk-based considerations and conclusions in the PA, CASAC advice, and public comments. The sections below discuss the evidence and exposure/risk information, CASAC advice and public input, and the Administrator's proposed conclusions, for the major elements of the NAAQS: indicator (II.C.1), averaging time (II.C.2), form (II.C.3), and level (II.C.4).

1. Indicator

In the 2008 review, the EPA focused on O_3 as the most appropriate indicator for a standard meant to provide protection against ambient photochemical oxidants. In this review, while the complex atmospheric chemistry in which O_3 plays a key role has been highlighted, no alternatives to O_3 have been advanced as being a more appropriate indicator for ambient photochemical oxidants. More specifically, the ISA noted that O_3 is the only photochemical oxidant (other than NO_2) that is routinely monitored and for which a comprehensive database exists (U.S. EPA, 2013, section 3.6). Data for other photochemical oxidants (e.g., peroxyacetyl nitrate, hydrogen peroxide, etc.) typically have been obtained only as part of special field studies. Consequently, no data on nationwide patterns of occurrence are available for these other oxidants; nor are extensive data available on the relationships of concentrations and patterns of these oxidants to those of O_3 (U.S. EPA, 2013, section 3.6). In its review of the second draft PA, CASAC stated "The indicator of ozone is appropriate based on its causal or likely causal associations with multiple adverse health outcomes and its representation of a class of pollutants known as photochemical oxidants" (Frey, 2014c, p. ii).

In addition, the PA notes that meeting an O_3 standard can be expected to provide some

This document is a prepublication version, signed by EPA Administrator, Gina McCarthy on 10/1/2015. We have taken steps to ensure the accuracy of this version, but it is not the official version.

degree of protection against potential health effects that may be independently associated with other photochemical oxidants, even though such effects are not discernible from currently available studies indexed by O_3 alone (U.S. EPA, 2014c, section 4.1). That is, since the precursor emissions that lead to the formation of O_3 generally also lead to the formation of other photochemical oxidants, measures leading to reductions in population exposures to O_3 can generally be expected to lead to reductions in population exposures to other photochemical oxidants. In considering this information, and CASAC's advice, the Administrator reached the proposed conclusion that O_3 remains the most appropriate indicator for a standard meant to provide protection against photochemical oxidants.[115]

The EPA received very few comments on the indicator of the primary standard. Those who did comment supported the proposed decision to retain O_3 as the indicator, noting the rationale put forward in the preamble to the proposed rule. These commenters generally expressed support for retaining the current indicator in conjunction with retaining other elements of the current standard, such as the averaging time and form. After considering the available evidence, CASAC advice, and public comments, the Administrator concludes that O_3 remains the most appropriate indicator for a standard meant to provide protection against photochemical oxidants. Therefore, she is retaining O_3 as the indicator for the primary standard in this final rule.

2. Averaging Time

The EPA established the current 8-hour averaging time[116] for the primary O_3 NAAQS in 1997 (62 FR 38856). The decision on averaging time in that review was based on numerous

[115]The D.C. Circuit upheld the use of O_3 as the indicator for photochemical oxidants based on these same considerations. *American Petroleum Inst. v. Costle*, 665 F. 2d 1176, 1186 (D.C. Cir. 1981).

[116]This 8-hour averaging time reflects daily maximum 8-hour average O_3 concentrations.

This document is a prepublication version, signed by EPA Administrator, Gina McCarthy on 10/1/2015. We have taken steps to ensure the accuracy of this version, but it is not the official version.

controlled human exposure and epidemiologic studies reporting associations between adverse respiratory effects and 6- to 8-hour O_3 concentrations (62 FR 38861). The EPA also noted that a standard with a maximum 8-hour averaging time is likely to provide substantial protection against respiratory effects associated with 1-hour peak O_3 concentrations. The EPA reached similar conclusions in the last O_3 NAAQS review and thus, the EPA retained the 8-hour averaging time in 2008.

In reaching a proposed conclusion on averaging time in the current review, the Administrator considered the extent to which the available evidence continues to support the appropriateness of a standard with an 8-hour averaging time (79 FR 75292). Specifically, the Administrator considered the extent to which the available information indicates that a standard with the current 8-hour averaging time provides appropriate protection against short- and long-term O_3 exposures. These considerations from the proposal are summarized below in sections II.C.2.a (short-term) and II.C.2.b (long-term). Section II.C.2.c summarizes the Administrator's proposed decision on averaging time. Section II.C.2.d discusses comments received on averaging time. Section II.C.2.e presents the Administrator's final decision regarding averaging time.

a. Short-term

As an initial consideration with respect to the most appropriate averaging time for the O_3 NAAQS, in the proposal the Administrator noted that the strongest evidence for O_3-associated health effects is for respiratory effects following short-term exposures. More specifically, the Administrator noted the ISA conclusion that the evidence is "sufficient to infer a causal relationship" between short-term O_3 exposures and respiratory effects. The ISA also judges that for short-term O_3 exposures, the evidence indicates "likely to be causal" relationships with both cardiovascular effects and mortality (U.S. EPA, 2013, section 2.5.2). Therefore, as in past

This document is a prepublication version, signed by EPA Administrator, Gina McCarthy on 10/1/2015. We have taken steps to ensure the accuracy of this version, but it is not the official version.

reviews, the Administrator noted that the strength of the available scientific evidence provides strong support for a standard that protects the public health against short-term exposures to O_3.

In first considering the level of support available for specific short-term averaging times, the Administrator noted in the proposal the evidence available from controlled human exposure studies. As discussed in more detail in Chapter 3 of the PA, substantial health effects evidence from controlled human exposure studies demonstrates that a wide range of respiratory effects (e.g., pulmonary function decrements, increases in respiratory symptoms, lung inflammation, lung permeability, decreased lung host defense, and airway hyperresponsiveness) occur in healthy adults following 6.6-hour exposures to O_3 (U.S. EPA, 2013, section 6.2.1.1). Compared to studies evaluating shorter exposure durations (e.g., 1-hour), studies evaluating 6.6-hour exposures in healthy adults have reported respiratory effects at lower O_3 exposure concentrations and at more moderate levels of exertion.

The Administrator also noted in the proposal the strength of evidence from epidemiologic studies that evaluated a wide variety of populations (e.g., including at-risk lifestages and populations, such as children and people with asthma, respectively). A number of different averaging times have been used in O_3 epidemiologic studies, with the most common being the max 1-hour concentration within a 24-hour period (1-hour max), the max 8-hour average concentration within a 24-hour period (8-hour max), and the 24-hour average. These studies are assessed in detail in Chapter 6 of the ISA (U.S. EPA, 2013). Limited evidence from time-series and panel epidemiologic studies comparing risk estimates across averaging times does not indicate that one exposure metric is more consistently or strongly associated with respiratory health effects or mortality, though the ISA notes some evidence for "smaller O_3 risk estimates when using a 24-hour average exposure metric" (U.S. EPA, 2013, section 2.5.4.2; p. 2-31). For

This document is a prepublication version, signed by EPA Administrator, Gina McCarthy on 10/1/2015. We have taken steps to ensure the accuracy of this version, but it is not the official version.

single- and multi-day average O_3 concentrations, lung function decrements were associated with 1-hour max, 8-hour max, and 24-hour average ambient O_3 concentrations, with no strong difference in the consistency or magnitude of association among the averaging times (U.S. EPA, 2013, p. 6-71). Similarly, in studies of short-term exposure to O_3 and mortality, Smith et al. (2009) and Darrow et al. (2011) have reported high correlations between risk estimates calculated using 24-hour average, 8-hour max, and 1-hour max averaging times (U.S. EPA, 2013, p. 6-253). Thus, the Administrator noted that the epidemiologic evidence alone does not provide a strong basis for distinguishing between the appropriateness of 1-hour, 8-hour, and 24-hour averaging times.

Considering the health information discussed above, in the proposal the Administrator concluded that an 8-hour averaging time remains appropriate for addressing health effects associated with short-term exposures to ambient O_3. An 8-hour averaging time is similar to the exposure periods evaluated in controlled human exposure studies, including recent studies that provide evidence for respiratory effects following exposures to O_3 concentrations below the level of the current standard. In addition, epidemiologic studies provide evidence for health effect associations with 8-hour O_3 concentrations, as well as with 1-hour and 24-hour concentrations. As in previous reviews, the Administrator noted that a standard with an 8-hour averaging time (combined with an appropriate standard form and level) would also be expected to provide substantial protection against health effects attributable to 1-hour and 24-hour exposures (e.g., 62 FR 38861, July 18, 1997). This conclusion is consistent with the advice received from CASAC that "the current 8-hour averaging time is justified by the combined evidence from epidemiologic and clinical studies" (Frey, 2014c, p. 6).

b. Long-term

This document is a prepublication version, signed by EPA Administrator, Gina McCarthy on 10/1/2015. We have taken steps to ensure the accuracy of this version, but it is not the official version.

The ISA concludes that the evidence for long-term O_3 exposures indicates that there is "likely to be a causal relationship" with respiratory effects (U.S. EPA, 2013, chapter 7). Thus, in this review the Administrator also considers the extent to which currently available evidence and exposure/risk information suggests that a standard with an 8-hour averaging time can provide protection against respiratory effects associated with longer term exposures to ambient O_3.

In considering this issue in the 2008 review of the O_3 NAAQS, the Staff Paper noted that "because long-term air quality patterns would be improved in areas coming into attainment with an 8-hr standard, the potential risk of health effects associated with long-term exposures would be reduced in any area meeting an 8-hr standard" (U.S. EPA, 2007, p. 6-57). In the current review, the PA further evaluates this issue, with a focus on the long-term O_3 metrics reported to be associated with mortality or morbidity in recent epidemiologic studies. As discussed in section 3.1.3 of the PA (U.S. EPA, 2014c, section 4.2), much of the recent evidence for such associations is based on studies that defined long-term O_3 in terms of seasonal averages of daily maximum 1-hour or 8-hour concentrations.

As an initial consideration, in the proposal the Administrator noted the risk results from the HREA for respiratory mortality associated with long-term O_3 concentrations. These HREA analyses indicate that as air quality is adjusted to just meet the current 8-hour standard, most urban study areas are estimated to experience reductions in respiratory mortality associated with long-term O_3 concentrations based on the seasonal averages of 1-hour daily maximum O_3 concentrations evaluated in the study by Jerrett et al. (2009) (U.S. EPA, 2014a, chapter 7).[117] As air quality is adjusted to meet lower alternative standard levels, for standards based on 3-year

[117] Though the Administrator also notes important uncertainties associated with these risk estimates, as discussed in section II.C.3.b of the proposal.

This document is a prepublication version, signed by EPA Administrator, Gina McCarthy on 10/1/2015. We have taken steps to ensure the accuracy of this version, but it is not the official version.

averages of the annual fourth-highest daily maximum 8-hour O_3 concentrations, respiratory mortality risks are estimated to be reduced further in urban study areas. This analysis indicates that an O_3 standard with an 8-hour averaging time, when coupled with an appropriate form and level, can reduce respiratory mortality reported to be associated with long-term O_3 concentrations.

In further considering the study by Jerrett et al. (2009), in the proposal the Administrator noted the PA comparison of long-term O_3 concentrations following model adjustment in urban study areas (i.e., adjusted to meet the current and alternative 8-hour standards) to the concentrations present in study cities that provided the basis for the positive and statistically significant association with respiratory mortality. As indicated in Table 4-3 of the PA (U.S. EPA, 2014c, section 4.2), this comparison suggests that a standard with an 8-hour averaging time can decrease seasonal averages of 1-hour daily maximum O_3 concentrations, and can maintain those O_3 concentrations below the seasonal average concentration where the study indicates the most confidence in the reported concentration-response relationship with respiratory mortality (U.S. EPA, 2014c, sections 4.2 and 4.4.1).

The Administrator also noted in the proposal that the HREA conducted analyses evaluating the impacts of reducing regional NO_X emissions on the seasonal averages of daily maximum 8-hour O_3 concentrations. Seasonal averages of 8-hour daily max O_3 concentrations reflect long-term metrics that have been reported to be associated with respiratory morbidity effects in several recent O_3 epidemiologic studies (e.g., Islam et al., 2008; Lin et al., 2008a, 2008b; Salam et al., 2009). The HREA analyses indicate that the large majority of the U.S. population lives in locations where reducing NO_X emissions would be expected to result in decreases in seasonal averages of daily max 8-hour ambient O_3 concentrations (U.S. EPA,

This document is a prepublication version, signed by EPA Administrator, Gina McCarthy on 10/1/2015. We have taken steps to ensure the accuracy of this version, but it is not the official version.

2014a, chapter 8). Thus, consistent with the respiratory mortality risk estimates noted above, these analyses suggest that reductions in O_3 precursor emissions in order to meet a standard with an 8-hour averaging time would also be expected to reduce the long-term O_3 concentrations that have been reported in recent epidemiologic studies to be associated with respiratory morbidity.

c. Administrator's Proposed Conclusion on Averaging Time

In the proposal the Administrator noted that, when taken together, the analyses summarized above indicate that a standard with an 8-hour averaging time, coupled with the current 4th high form and an appropriate level, would be expected to provide appropriate protection against the short- and long-term O_3 concentrations that have been reported to be associated with respiratory morbidity and mortality. The CASAC agreed with this conclusion, stating that "[t]he current 8-hour averaging time is justified by the combined evidence from epidemiologic and clinical studies" and that "[t]he 8-hour averaging window also provides protection against the adverse impacts of long-term ozone exposures, which were found to be "likely causal" for respiratory effects and premature mortality" (Frey, 2014c, p. 6). Therefore, considering the available evidence and exposure risk information, and CASAC's advice, the Administrator proposed to retain the current 8-hour averaging time, and not to set an additional standard with a different averaging time.

d. Comments on Averaging Time

Most public commenters did not address the issue of whether the EPA should consider additional or alternative averaging times. Of those who did address this issue, some commenters representing state agencies or industry groups agreed with the proposed decision to retain the current 8-hour averaging time, generally noting the supportive evidence discussed in the preamble to the proposed rule. In contrast, several medical organizations and environmental

This document is a prepublication version, signed by EPA Administrator, Gina McCarthy on 10/1/2015. We have taken steps to ensure the accuracy of this version, but it is not the official version.

groups questioned the degree of health protection provided by a standard based on an 8-hour averaging time. For example, one group asserted that "[a]veraging over any time period, such as 8 hours, is capable of hiding peaks that may be very substantial if they are brief enough."

The EPA agrees with these commenters that an important issue in the current review is the appropriateness of using a standard with an 8-hour averaging time to protect against adverse health effects that are attributable to a wide range of O_3 exposure durations, including those shorter and longer than 8 hours. This is an issue that has been thoroughly evaluated by the EPA in past reviews, as well as in the current review.

The 8-hour O_3 NAAQS was originally set in 1997, as part of revising the then-existing standard with its 1-hour averaging time, and was retained in the review completed in 2008 (73 FR 16472). In both of these reviews, several lines of evidence and information provided support for an 8-hour averaging time rather than a shorter averaging time. For example, substantial health evidence demonstrated associations between a wide range of respiratory effects and 6- to 8-hour exposures to relatively low O_3 concentrations (i.e., below the level of the 1-hour O_3 NAAQS in place prior to the review completed in 1997). A standard with an 8-hour averaging time was determined to be more directly associated with health effects of concern at lower O_3 concentrations than a standard with a 1-hour averaging time. In addition, results of quantitative analyses showed that a standard with an 8-hour averaging time can effectively limit both 1- and 8-hour exposures of concern, and that an 8-hour averaging time results in a more uniformly protective national standard than a 1-hour averaging time. In past reviews, CASAC has agreed that an 8-hour averaging time is appropriate.

In reaching her proposed decision to retain the 8-hour averaging time in the current review, the Administrator again considered the body of evidence for adverse effects attributable

This document is a prepublication version, signed by EPA Administrator, Gina McCarthy on 10/1/2015. We have taken steps to ensure the accuracy of this version, but it is not the official version.

to a wide range of O_3 exposure durations, including studies specifically referenced by public commenters who questioned the protectiveness of a standard with an 8-hour averaging time. For example, as noted above a substantial body of health effects evidence from controlled human exposure studies demonstrates that a wide range of respiratory effects occur in healthy adults following 6.6-hour exposures to O_3 (U.S. EPA, 2013, section 6.2.1.1). Compared to studies evaluating shorter exposure durations (e.g., 1-hour), studies evaluating 6.6-hour exposures in healthy adults have reported respiratory effects at lower O_3 exposure concentrations and at more moderate levels of exertion. The Administrator also noted the strength of evidence from epidemiologic studies that evaluated a number of different averaging times, with the most common being the maximum 1-hour concentration within a 24-hour period (1-hour max), the maximum 8-hour average concentration within a 24-hour period (8-hour max), and the 24-hour average. Evidence from time-series and panel epidemiologic studies comparing risk estimates across averaging times does not indicate that one exposure metric is more consistently or strongly associated with respiratory health effects or mortality (U.S. EPA, 2013, section 2.5.4.2; p. 2-31). For single- and multi-day average O_3 concentrations, lung function decrements were associated with 1-hour max, 8-hour max, and 24-hour average ambient O_3 concentrations, with no strong difference in the consistency or magnitude of association among the averaging times (U.S. EPA, 2013, p. 6-71). Similarly, in studies of short-term exposure to O_3 and mortality, Smith et al. (2009) and Darrow et al. (2011) have reported high correlations between risk estimates calculated using 24-hour average, 8-hour max, and 1-hour max averaging times (U.S. EPA, 2013, p. 6-253). Thus, the epidemiologic evidence does not provide a strong basis for distinguishing between the appropriateness of 1-hour, 8-hour, and 24-hour averaging times.

In addition, quantitative exposure and risk analyses in the HREA are based on an air

This document is a prepublication version, signed by EPA Administrator, Gina McCarthy on 10/1/2015. We have taken steps to ensure the accuracy of this version, but it is not the official version.

quality adjustment approach that estimates hourly O_3 concentrations, and on scientific studies that evaluated health effects attributable to a wide range of O_3 exposure durations. For example, the risk of lung function decrements is estimated using a model based on controlled human exposure studies with exposure durations ranging from 2 to 7.6 hours (U.S. EPA, 2013, section 6.2.1.1). Epidemiology-based risk estimates are based on studies that reported health effect associations with short-term ambient O_3 concentrations ranging from 1-hour to 24-hours and with long-term seasonal average concentrations (U.S. EPA, 2014a, Table 7-2). Thus, the HREA estimated health risks associated with a wide range of O_3 exposure durations and the Administrator's conclusions on averaging time in the current review are based, in part, on consideration of these estimates.

When taken together, the evidence and analyses indicate that a standard with an 8-hour averaging time, coupled with the current 4th-high form and an appropriate level, would be expected to provide appropriate protection against the short- and long-term O_3 concentrations that have been reported to be associated with respiratory morbidity and mortality. The CASAC agreed with this, stating the following (Frey, 2014c, p. 6):

> The current 8-hour averaging time is justified by the combined evidence from epidemiologic and clinical studies referenced in Chapter 4. Results from clinical studies, for example, show a wide range of respiratory effects in healthy adults following 6.6 hours of exposure to ozone, including pulmonary function decrements, increases in respiratory symptoms, lung inflammation, lung permeability, decreased lung host defense, and airway hyperresponsiveness. These findings are supported by evidence from epidemiological studies that show causal associations between short-term exposures of 1, 8 and 24-hours and respiratory effects and "likely to be causal" associations for cardiovascular effects and premature mortality. The 8-hour averaging window also provides protection against the adverse impacts of long-term ozone exposures, which were found to be "likely causal" for respiratory effects and premature mortality.

Given all of the above, the EPA disagrees with commenters who question the protectiveness of

This document is a prepublication version, signed by EPA Administrator, Gina McCarthy on 10/1/2015. We have taken steps to ensure the accuracy of this version, but it is not the official version.

an O_3 standard with an 8-hour averaging time, particularly for an 8-hour standard with the revised level of 70 ppb that is being established in this review, as discussed below (II.C.4).

e. Administrator's Final Decision Regarding Averaging Time

In considering the evidence and information summarized in the proposal and discussed in detail in the ISA, HREA, and PA; CASAC's views; and public comments, the Administrator concludes that a standard with an 8-hour averaging time can effectively limit health effects attributable to both short- and long-term O_3 exposures. As was the case in the proposal, this final conclusion is based on (1) the strong evidence that continues to support the importance of protecting public health against short-term O_3 exposures (e.g., ≤ 1-hour to 24-hour) and (2) analyses in the HREA and PA supporting the conclusion that the current 8-hour averaging time can effectively limit long-term O_3 exposures. Furthermore, the Administrator observes that the CASAC Panel agreed with the choice of averaging time (Frey, 2014c). Therefore, in the current review, the Administrator concludes that it is appropriate to retain the 8-hour averaging time and to not set a separate standard with a different averaging time in this final rule.

3. Form

The "form" of a standard defines the air quality statistic that is to be compared to the level of the standard in determining whether an area attains that standard. The foremost consideration in selecting a form is the adequacy of the public health protection provided by the combination of the form and the other elements of the standard. In this review, the Administrator considers the extent to which the available evidence and/or information continue to support the appropriateness of a standard with the current form, defined by the 3-year average of annual 4th-highest 8-hour daily maximum O_3 concentrations. Section II.C.3.a below summarizes the basis for the current form. Section II.C.3.b discusses the Administrator's proposed decision to retain

This document is a prepublication version, signed by EPA Administrator, Gina McCarthy on 10/1/2015. We have taken steps to ensure the accuracy of this version, but it is not the official version.

the current form. Section II.C.3.c discusses public comments received on the form of the primary standard. Section II.C.3.d discusses the Administrator's final decision on form.

a. Basis for the Current Form

The EPA established the current form of the primary O_3 NAAQS in 1997 (62 FR 38856). Prior to that time, the standard had a "1-expected-exceedance" form.[118] An advantage of the current concentration-based form recognized in the 1997 review is that such a form better reflects the continuum of health effects associated with increasing ambient O_3 concentrations. Unlike an expected exceedance form, a concentration-based form gives proportionally more weight to years when 8-hour O_3 concentrations are well above the level of the standard than years when 8-hour O_3 concentrations are just above the level of the standard.[119] The EPA judged it appropriate to give more weight to higher O_3 concentrations, given that available health evidence indicated a continuum of effects associated with exposures to varying concentrations of O_3, and given that the extent to which public health is affected by exposure to ambient O_3 is related to the actual magnitude of the O_3 concentration, not just whether the concentration is above a specified level.

During the 1997 review, the EPA considered a range of alternative "concentration-based" forms, including the 2nd-, 3rd-, 4th- and 5th-highest daily maximum 8-hour concentrations in an

[118] For a standard with a 1-expected-exceedance form to be met at an air quality monitoring site, the fourth-highest air quality value in 3 years, given adjustments for missing data, must be less than or equal to the level of the standard.

[119] As discussed (61 FR 65731), this is because with an exceedance-based form, days on which the ambient O_3 concentration is well above the level of the standard are given equal weight to those days on which the O_3 concentration is just above the standard (i.e., each day is counted as one exceedance), even though the public health impact of such days would be very different. With a concentration-based form, days on which higher O_3 concentrations occur would weigh proportionally more than days with lower O_3 concentrations since the actual concentrations are used directly to calculate whether the standard is met or violated.

This document is a prepublication version, signed by EPA Administrator, Gina McCarthy on 10/1/2015. We have taken steps to ensure the accuracy of this version, but it is not the official version.

O_3 season. The 4th-highest daily maximum was selected, recognizing that a less restrictive form (e.g., 5th-highest) would allow a larger percentage of sites to experience O_3 peaks above the level of the standard, and would allow more days on which the level of the standard may be exceeded when the site attains the standard (62 FR 38856). The EPA also considered setting a standard with a form that would provide a margin of safety against possible but uncertain chronic effects, and would provide greater stability to ongoing control programs.[120] A more restrictive form was not selected, recognizing that the differences in the degree of protection afforded by the alternatives were not well enough understood to use any such differences as a basis for choosing the most restrictive forms (62 FR 38856).

In the 2008 review, the EPA additionally considered the potential value of a percentile-based form. In doing so, the EPA recognized that such a statistic is useful for comparing datasets of varying length because it samples approximately the same place in the distribution of air quality values, whether the dataset is several months or several years long. However, the EPA concluded that a percentile-based statistic would not be effective in ensuring the same degree of public health protection across the country. Specifically, a percentile-based form would allow more days with higher air quality values in locations with longer O_3 seasons relative to locations with shorter O_3 seasons. Thus, in the 2008 review, the EPA concluded that a form based on the nth-highest maximum O_3 concentration would more effectively ensure that people who live in areas with different length O_3 seasons receive the same degree of public health protection.

Based on analyses of forms specified in terms of an nth-highest concentration (n ranged

[120] See *American Trucking Assn's v. EPA*, 283 F. 3d at 374-75 (less stable implementation programs may be less effective and would thereby provide less public health protection; EPA may therefore legitimately consider programmatic stability in determining the form of a NAAQS).

This document is a prepublication version, signed by EPA Administrator, Gina McCarthy on 10/1/2015. We have taken steps to ensure the accuracy of this version, but it is not the official version.

from 3 to 5), advice from CASAC, and public comment, the Administrator concluded that a 4th-highest daily maximum should be retained (73 FR 16465, March 27, 2008). In reaching this decision, the Administrator recognized that "there is not a clear health-based threshold for selecting a particular nth-highest daily maximum form of the standard" and that "the adequacy of the public health protection provided by the combination of the level and form is a foremost consideration" (73 FR 16475, March 27, 2008). Based on this, the Administrator judged that the existing form (4th-highest daily maximum 8-hour average concentration) should be retained, recognizing the increase in public health protection provided by combining this form with a lower standard level (i.e., 75 ppb).

The Administrator also recognized that it is important to have a form that provides stability with regard to implementation of the standard. In the case of O_3, for example, he noted the importance of a form insulated from the impacts of extreme meteorological events that are conducive to O_3 formation. Such events could have the effect of reducing public health protection, to the extent they result in frequent shifts in and out of attainment due to meteorological conditions. The Administrator noted that such frequent shifting could disrupt an area's ongoing implementation plans and associated control programs (73 FR 16474, March 27, 2008). In his final decision, the Administrator judged that a 4th-high form "provides a stable target for implementing programs to improve air quality" (id. at 16475).

b. Proposed Decision on Form

In the proposal for the current review, the Administrator considered the extent to which newly available information provides support for the current form (79 FR 75293). In so doing, she took note of the conclusions of prior reviews summarized above. She recognized the value of an nth-high statistic over that of an expected exceedance or percentile-based form in the case of

This document is a prepublication version, signed by EPA Administrator, Gina McCarthy on 10/1/2015. We have taken steps to ensure the accuracy of this version, but it is not the official version.

the O_3 standard, for the reasons summarized above. The Administrator additionally took note of the importance of stability in implementation to achieving the level of protection specified by the NAAQS. Specifically, she noted that to the extent areas engaged in implementing the O_3 NAAQS frequently shift from meeting the standard to violating the standard, it is possible that ongoing implementation plans and associated control programs could be disrupted, thereby reducing public health protection.

In light of this, while giving foremost consideration to the adequacy of public health protection provided by the combination of all elements of the standard, including the form, the Administrator considered particularly the findings from prior reviews with regard to the use of the nth-high metric. As noted above, the EPA selected the 4th-highest daily maximum, recognizing the public health protection provided by this form, when coupled with an appropriate averaging time and level, and recognizing that such a form can provide stability for implementation programs. In the proposal the Administrator concluded that the currently available evidence and information do not call into question these conclusions from previous reviews. In reaching this initial conclusion, the Administrator noted that CASAC concurred that the O_3 standard should be based on the 4th-highest, daily maximum 8-hour average value (averaged over 3 years), stating that this form "provides health protection while allowing for atypical meteorological conditions that can lead to abnormally high ambient ozone concentrations which, in turn, provides programmatic stability" (Frey, 2014c, p. 6). Thus, a standard with the current 4th-high form, coupled with a level lower than 75 ppb as discussed below, would be expected to increase public health protection relative to the current standard while continuing to provide stability for implementation programs. Therefore, the Administrator proposed to retain the current 4th-highest daily maximum form for an O_3 standard with an 8-hour

This document is a prepublication version, signed by EPA Administrator, Gina McCarthy on 10/1/2015. We have taken steps to ensure the accuracy of this version, but it is not the official version.

averaging time and a revised level.

c. Public Comments on Form

Several commenters focused on the stability of the standard to support their positions regarding form. Some industry associations and state agencies support changing to a form that would allow a larger number of exceedances of the standard level than are allowed by the current 4th-high form. In some cases, these commenters argued that a standard allowing a greater number of exceedances would provide the same degree of public health protection as the current standard. Some commenters advocated a percentile-based form, such as the 98th percentile. These commenters cited a desire for consistency with short-term standards for other criteria pollutants (e.g., $PM_{2.5}$, NO_2), as well as a desire to allow a greater number of exceedances of the standard level, thus making the standard less sensitive to fluctuations in background O_3 concentrations and to extreme meteorological events.

Other commenters submitted analyses purporting to indicate that a 4th-high form provides only a small increase in stability, relative to forms that allow fewer exceedances of the standard level (i.e., 1st-high, 2nd-high). These commenters also called into question the degree of health protection achieved by a standard with a 4th-high form and a level in the proposed range (i.e., 65 to 70 ppb). They pointed out that a 4th-high form will, by definition, allow 3 days per year, on average, with 8-hour O_3 concentrations above the level of the standard. Commenters further stated that "[i]f ozone levels on these peak days are appreciably higher than on the 4th-highest day, given EPA's acknowledged concerns regarding single or multiple (defined by EPA as 2 or more) exposures to elevated ozone concentrations, EPA must account for the degree of under-protection in setting the level of the NAAQS" (e.g., ALA et al., p. 138).

For the reasons discussed in the proposal, and summarized above, the EPA disagrees with

This document is a prepublication version, signed by EPA Administrator, Gina McCarthy on 10/1/2015. We have taken steps to ensure the accuracy of this version, but it is not the official version.

commenters who supported a percentile-based form, such as the 98th percentile, for the O_3 NAAQS. As noted above, a percentile-based statistic would not be effective in ensuring the same degree of public health protection across the country. Rather, a percentile-based form would allow more days with higher air quality values in locations with longer O_3 seasons relative to locations with shorter O_3 seasons. Thus, as in the 2008 review, in the current review the EPA concludes that a form based on the nth-highest maximum O_3 concentration would more effectively ensure that people who live in areas with different length O_3 seasons receive the same degree of public health protection.

In considering various nth-high values, as in past reviews (e.g., 73 FR 16475, March 27, 2008), the EPA recognizes that there is not a clear health-based threshold for selecting a particular nth-highest daily maximum form. Rather, the primary consideration is the adequacy of the public health protection provided by the combination of all of the elements of the standard, including the form. Environmental and public health commenters are correct that a standard with the current 4th-high form will allow 3 days per year, on average, with 8-hour O_3 concentrations higher than the standard level. However, the EPA disagrees with these commenters' assertion that using a 4th-high form results in a standard that is under-protective. The O_3 exposure and risk estimates that informed the Administrator's consideration of the degree of public health protection provided by various standard levels were based on air quality that "just meets" various standards with the current 8-hour averaging time and 4th-high, 3-year average form (U.S. EPA, 2014a, section 4.3.3). Therefore, air quality adjusted to meet various levels of the standard with the current form and averaging time will include days with concentrations above the level of the standard, and these days contribute to exposure and risk estimates. In this way, the Administrator has reasonably considered the public health protection provided by the combination of all of the

This document is a prepublication version, signed by EPA Administrator, Gina McCarthy on 10/1/2015. We have taken steps to ensure the accuracy of this version, but it is not the official version.

elements of the standard, including the 4th-high form.

In past reviews, EPA selected the 4th-highest daily maximum form in recognition of the public health protection provided by this form, when coupled with an appropriate averaging time and level, and recognizing that such a form can provide stability for ongoing implementation programs. As noted above, some commenters submitted analyses suggesting that a 4th high form provides only a small increase in stability, relative to a 1st- or 2nd-high form. The EPA has conducted analyses of ambient O_3 monitoring data to further consider these commenters' assertions regarding stability. The EPA's analyses of nth-high concentrations ranging from 1st-high to 5th-high have been summarized in a memo to the docket (Wells, 2015a). Consistent with commenters' analyses, Wells (2015a) indicates a progressive decrease in the variability of O_3 concentrations, and an increase in the stability of those concentrations, as "n" increases. Based on these analyses, there is no clear threshold for selecting a particular nth-high form based on stability alone. Rather, as in past reviews, the decision on form in this review focuses first and foremost on the Administrator's judgments on public health protection, with judgments regarding stability of the standard being a legitimate, but secondary consideration. The Administrator's final decision on form is discussed below.

d. Administrator's Final Decision Regarding Form

In reaching a final decision on the form of the primary O_3 standard, as described in the proposal and above, the Administrator recognizes that there is not a clear health-based rationale for selecting a particular nth-highest daily maximum form. Her foremost consideration is the adequacy of the public health protection provided by the combination of all of the elements of the standard, including the form. In this regard, the Administrator recognizes the support from analyses in previous reviews, and from the CASAC in the current review, for the conclusion that

This document is a prepublication version, signed by EPA Administrator, Gina McCarthy on 10/1/2015. We have taken steps to ensure the accuracy of this version, but it is not the official version.

the current 4th-high form of the standard, when combined with a revised level as discussed below, provides an appropriate balance between public health protection and a stable target for implementing programs to improve air quality. In particular, she notes that the CASAC concurred that the O_3 standard should be based on the 4th-highest, daily maximum 8-hour average value (averaged over 3 years), stating that this form "provides health protection while allowing for atypical meteorological conditions that can lead to abnormally high ambient ozone concentrations which, in turn, provides programmatic stability" (Frey, 2014c, p. 6). Based on these considerations, and on consideration of public comments on form as discussed above, the Administrator judges it appropriate to retain the current 4th high form (4th-highest daily maximum 8-hour O_3 concentration, averaged over 3 years) in this final rule.

4. Level

This section summarizes the basis for the Administrator's proposed decision to revise the current standard level (II.C.4.a); discusses public comments, and the EPA's responses, on that proposed decision (II.C.4.b); and presents the Administrator's final decision regarding the level of the primary O_3 standard (II.C.4.c).

a. Basis for the Administrator's Proposed Decision on Level

In conjunction with her proposed decisions to retain the current indicator, averaging time, and form (II.C.1 to II.C.3, above), the Administrator proposed to revise the level of the primary O_3 standard to within the range of 65 to 70 ppb. In proposing this range of standard levels, as discussed in section II.E.4 of the proposal, the Administrator carefully considered the scientific evidence assessed in the ISA (U.S. EPA, 2013); the results of the exposure and risk assessments in the HREA (U.S. EPA, 2014a); the evidence-based and exposure-/risk-based considerations and conclusions in the PA (U.S. EPA, 2014c); CASAC advice and recommendations, as

This document is a prepublication version, signed by EPA Administrator, Gina McCarthy on 10/1/2015. We have taken steps to ensure the accuracy of this version, but it is not the official version.

reflected in CASAC's letters to the Administrator and in public discussions of drafts of the ISA, HREA, and PA (Frey and Samet, 2012; Frey, 2014 a, c); and public input received during the development of these documents.

The Administrator's proposal to revise the standard level built upon her proposed conclusion that the overall body of scientific evidence and exposure/risk information calls into question the adequacy of public health protection afforded by the current primary O_3 standard, particularly for at-risk populations and lifestages. In reaching proposed conclusions on alternative levels for the primary O_3 standard, the Administrator considered the extent to which various alternatives would be expected to protect the public, including at-risk populations, against the wide range of adverse health effects that have been linked with short- or long-term O_3 exposures.

As was the case for her consideration of the adequacy of the current primary O_3 standard (II.B.3, above), the Administrator placed the greatest weight on the results of controlled human exposure studies and on exposure and risk analyses based on information from these studies. In doing so, she noted that controlled human exposure studies provide the most certain evidence indicating the occurrence of health effects in humans following exposures to specific O_3 concentrations. The effects reported in these studies are due solely to O_3 exposures, and interpretation of study results is not complicated by the presence of co-occurring pollutants or pollutant mixtures (as is the case in epidemiologic studies). She further noted the CASAC judgment that "the scientific evidence supporting the finding that the current standard is inadequate to protect public health is strongest based on the controlled human exposure studies of respiratory effects" (Frey, 2014c, p. 5).

In considering the evidence from controlled human exposure studies, the Administrator

This document is a prepublication version, signed by EPA Administrator, Gina McCarthy on 10/1/2015. We have taken steps to ensure the accuracy of this version, but it is not the official version.

first noted that the largest respiratory effects, and the broadest range of effects, have been studied and reported following exposures to 80 ppb O_3 or higher, with most exposure studies conducted at these higher concentrations. Exposures of healthy adults to O_3 concentrations of 80 ppb or higher have been reported to decrease lung function, increase airway inflammation, increase respiratory symptoms, result in airway hyperresponsiveness, and decrease lung host defenses. The Administrator further noted that O_3 exposure concentrations as low as 72 ppb have been shown to both decrease lung function and increase respiratory symptoms (Schelegle et al., 2009),[121] a combination that meets the ATS criteria for an adverse response, and that exposures as low as 60 ppb have been reported to decrease lung function and increase airway inflammation.

Based on this evidence, the Administrator reached the initial conclusion that the results of controlled human exposure studies strongly support setting the level of a revised O_3 standard no higher than 70 ppb. In reaching this conclusion, she placed a large amount of weight on the importance of setting the level of the standard well below 80 ppb, the exposure concentration at which the broadest range of effects have been studied and reported, and below 72 ppb, the lowest exposure concentration shown to result in the adverse combination of lung function decrements and respiratory symptoms. She placed significant weight on this *combination* of effects, as did CASAC, in making judgments regarding the potential for adverse responses.

In further considering the potential public health implications of a standard with a level of 70 ppb, the Administrator also considered quantitative estimates of the extent to which such a standard would be expected to limit population exposures to the broader range of O_3 concentrations shown in controlled human exposure studies to cause respiratory effects. In doing

[121] As noted above, for the 70 ppb target exposure concentration, Schelegle et al. (2009) reported that the actual mean exposure concentration was 72 ppb.

This document is a prepublication version, signed by EPA Administrator, Gina McCarthy on 10/1/2015. We have taken steps to ensure the accuracy of this version, but it is not the official version.

so, she focused on estimates of O_3 exposures of concern at or above the benchmark concentrations of 60, 70, and 80 ppb. The Administrator judged that the evidence supporting the occurrence of adverse respiratory effects is strongest for exposures at or above the 70 and 80 ppb benchmarks. Therefore, she placed a large amount of emphasis on the importance of setting a standard that limits exposures of concern at or above these benchmarks.

The Administrator expressed less confidence that adverse effects will occur following exposures to O_3 concentrations as low as 60 ppb. In reaching this conclusion, she highlighted the fact that statistically significant increases in respiratory symptoms, combined with lung function decrements, have not been reported following exposures to 60 or 63 ppb O_3, though several studies have evaluated the potential for such effects (Kim et al., 2011; Schelegle et al., 2009; Adams, 2006).[122] The proposal specifically stated that "[t]he Administrator has decreasing confidence that adverse effects will occur following exposures to O_3 concentrations below 72 ppb. In particular, compared to O_3 exposure concentrations at or above 72 ppb, she has less confidence that adverse effects will occur following exposures to O_3 concentrations as low as 60 ppb" (79 FR 73304-05).

However, she noted the possibility for adverse effects following such exposures given that: (1) CASAC judged the adverse combination of lung function decrements and respiratory symptoms "almost certainly occur in some people" following exposures to O_3 concentrations below 72 ppb (though CASAC did not specify or otherwise indicate how far below) (Frey, 2014c, p. 6); (2) CASAC indicated the moderate lung function decrements (i.e., FEV_1 decrements ≥ 10%) that occur in some healthy adults following exposures to 60 ppb O_3 could be

[122] In the study by Schelegle, for the 60 ppb target exposure concentration, study authors reported that the actual mean exposure concentration was 63 ppb.

This document is a prepublication version, signed by EPA Administrator, Gina McCarthy on 10/1/2015. We have taken steps to ensure the accuracy of this version, but it is not the official version.

adverse to people with lung disease; and (3) airway inflammation has been reported following exposures as low as 60 ppb O_3. She also took note of CASAC advice that the occurrence of exposures of concern at or above 60 ppb is an appropriate consideration for people with asthma (Frey, 2014c, p. 6). Therefore, while the Administrator expressed less confidence that adverse effects will occur following exposures to O_3 concentrations as low as 60 ppb, compared to 70 ppb and above, based on the evidence and CASAC advice she also gave some consideration to exposures of concern for the 60 ppb benchmark.

Due to interindividual variability in responsiveness, the Administrator further noted that not every occurrence of an exposure of concern will result in an adverse effect, and that repeated occurrences of some of the effects demonstrated following exposures of concern could increase the likelihood of adversity (U.S. EPA, 2013, section 6.2.3). Therefore, the Administrator was most concerned about protecting at-risk populations against repeated occurrences of exposures of concern. Based on the above considerations, the Administrator focused on the extent to which a revised standard with a level of 70 ppb would be expected to protect populations from experiencing two or more O_3 exposures of concern (i.e., as a surrogate for repeated exposures).

As illustrated in Table 1 in the proposal (and Table 1 above), the Administrator noted that, in urban study areas, a revised standard with a level of 70 ppb is estimated to eliminate the occurrence of two or more exposures of concern to O_3 concentrations at and above 80 ppb and to virtually eliminate the occurrence of two or more exposures of concern to O_3 concentrations at and above 70 ppb, even in the worst-case urban study area and year evaluated. Though the Administrator acknowledged greater uncertainty with regard to the occurrence of adverse effects following exposures to 60 ppb, she noted that a revised standard with a level of 70 ppb would also be expected to protect the large majority of children in the urban study areas (i.e., about 96%

This document is a prepublication version, signed by EPA Administrator, Gina McCarthy on 10/1/2015. We have taken steps to ensure the accuracy of this version, but it is not the official version.

to more than 99% of children in individual urban study areas) from experiencing two or more exposures of concern at or above the 60 ppb benchmark. Compared to the current standard, this represents a reduction of more than 60%.[123]

In further evaluating the potential public health impacts of a standard with a level of 70 ppb, the Administrator also considered the HREA estimates of O_3-induced lung function decrements. To inform her consideration of these decrements, the Administrator took note of CASAC advice that "estimation of FEV_1 decrements of $\geq$ 15% is appropriate as a scientifically relevant surrogate for adverse health outcomes in active healthy adults, whereas an FEV_1 decrement of $\geq$ 10% is a scientifically relevant surrogate for adverse health outcomes for people with asthma and lung disease" (Frey, 2014c, p. 3).

Although these FEV_1 decrements provide perspective on the potential for the occurrence of adverse respiratory effects following O_3 exposures, the Administrator agreed with the conclusion in past reviews that a more general consensus view of the adversity of moderate responses emerges as the frequency of occurrence increases (61 FR 65722-3, Dec, 13, 1996). Specifically, she judged that not every estimated occurrence of an O_3-induced FEV_1 decrement will be adverse and that repeated occurrences of moderate responses could lead to more serious illness. Therefore, the Administrator noted increasing concern about the potential for adversity as the number of occurrences increases and, as a result, she focused primarily on estimates of two

[123] The Administrator judged that the evidence is less compelling, and indicates greater uncertainty, with regard to the potential for adverse effects following single occurrences of O_3 exposures of concern. While acknowledging this greater uncertainty, she noted that a standard with a level of 70 ppb would also be expected to virtually eliminate all occurrences (including single occurrences) of exposures of concern at or above 80 ppb, even in the worst-case year and location. She also judged that such a standard will achieve important reductions, compared to the current standard, in the occurrence of one or more exposures of concern at or above 70 and 60 ppb.

This document is a prepublication version, signed by EPA Administrator, Gina McCarthy on 10/1/2015. We have taken steps to ensure the accuracy of this version, but it is not the official version.

or more O_3-induced FEV_1 decrements (i.e., as a surrogate for repeated exposures). [124]

The Administrator noted that a revised O_3 standard with a level of 70 ppb is estimated to protect about 98 to 99% of children in urban study areas from experiencing two or more O_3-induced FEV_1 decrements $\geq$ 15%, and about 89 to 94% from experiencing two or more decrements $\geq$ 10%. She judged that these estimates reflect important risk reductions, compared to the current standard. Given these estimates, as well as estimates of one or more decrements per season (about which she was less concerned (79 FR 75290, December 17, 2014)), the Administrator concluded that a revised standard with a level of 70 ppb would be expected to provide substantial protection against the risk of O_3-induced lung function decrements, and would be expected to result in important reductions in such risks, compared to the current standard. The Administrator further noted, however, that the variability in lung function risk estimates across urban study areas is often greater than the differences in risk estimates between various standard levels (Table 2, above). Given this, and the resulting considerable overlap between the ranges of lung function risk estimates for different standard levels, in the proposal the Administrator viewed lung function risk estimates as providing a more limited basis than exposures of concern for distinguishing between the degrees of public health protection provided by alternative standard levels (79 FR 75306 n. 164).

In next considering the additional protection that would be expected from standard levels below 70 ppb, the Administrator evaluated the extent to which a standard with a level of 65 ppb would be expected to further limit O_3 exposures of concern and O_3-induced lung function

[124] In the proposal, the Administrator further judged that it would not be appropriate to set a standard that is intended to eliminate all O_3-induced FEV_1 decrements. She noted that this is consistent with CASAC advice, which did not include a recommendation to set the standard level low enough to eliminate all O_3-induced FEV_1 decrements $\geq$ 10 or 15% (Frey, 2014c).

This document is a prepublication version, signed by EPA Administrator, Gina McCarthy on 10/1/2015. We have taken steps to ensure the accuracy of this version, but it is not the official version.

decrements. In addition to eliminating almost all exposures of concern to O_3 concentrations at or above 80 and 70 ppb, even in the worst-case years and locations, the Administrator noted that a revised standard with a level of 65 ppb would be expected to protect more than 99% of children in urban study areas from experiencing two or more exposures of concern at or above 60 ppb and to substantially reduce the occurrence of one or more such exposures, compared to the current standard. With regard to O_3-induced lung function decrements, an O_3 standard with a level of 65 ppb is estimated to protect about 98% to more than 99% of children from experiencing two or more O_3-induced FEV_1 decrements $\geq$ 15% and about 91 to 99% from experiencing two or more decrements $\geq$ 10%.[125]

Taken together, the Administrator concluded that the evidence from controlled human exposure studies, and the information from quantitative analyses that draw upon these studies, provide strong support for standard levels from 65 to 70 ppb. In particular, she based this conclusion on the fact that such standard levels would be well below the O_3 exposure concentration shown to result in the widest range of respiratory effects (i.e., 80 ppb),[126] and below the lowest O_3 exposure concentration shown to result in the adverse combination of lung function decrements and respiratory symptoms (i.e., 72 ppb). A standard with a level from 65 to 70 ppb would also be expected to result in important reductions, compared to the current standard, in the occurrence of O_3 exposures of concern for all of the benchmarks evaluated (i.e., 60, 70, and 80 ppb) and in the risk of O_3-induced lung function decrements $\geq$ 10 and 15%.

---

[125] Although the Administrator was less concerned about the public health implications of single O_3-induced lung function decrements, she also noted that a revised standard with a level of 65 ppb is estimated to reduce the risk of one or more O_3-induced decrements per season, compared to the current standard.

[126] Although the widest range of effects have been evaluated following exposures to 80 ppb O_3, there is no evidence that 80 ppb is a threshold for these effects.

This document is a prepublication version, signed by EPA Administrator, Gina McCarthy on 10/1/2015. We have taken steps to ensure the accuracy of this version, but it is not the official version.

In further considering the evidence and exposure/risk information, the Administrator considered the extent to which the epidemiologic evidence also provides support for standard levels from 65 to 70 ppb. In particular, the Administrator noted analyses in the PA (U.S. EPA, 2014c, section 4.4.1) indicating that a revised standard with a level of 65 or 70 ppb would be expected to maintain distributions of short-term ambient O_3 concentrations below those present in the locations of all the single-city epidemiologic studies of hospital admissions or emergency department visits analyzed. She concluded that a revised standard with a level at least as low as 70 ppb would result in improvements in public health, beyond the protection provided by the current standard, in the locations of the single-city epidemiologic studies that reported significant health effect associations.[127]

The Administrator noted additional uncertainty in interpreting air quality in locations of multicity epidemiologic studies of short-term O_3 for the purpose of evaluating alternative standard levels (II.D.1 and U.S. EPA, 2014c, section 4.4.1). While acknowledging this uncertainty, and therefore placing less emphasis on these analyses of study location air quality, she noted that PA analyses suggest that standard levels of 65 or 70 ppb would require reductions, beyond those required by the current standard, in ambient O_3 concentrations present in several of the locations that provided the basis for statistically significant O_3 health effect associations in multicity studies.

In further evaluating information from epidemiologic studies, the Administrator

[127] The Administrator also concluded that analyses in the HREA and PA indicate that a standard with an 8-hour averaging time, coupled with the current 4th high form and a level from 65 to 70 ppb, would be expected to provide increased protection, compared to the current standard, against the long-term O_3 concentrations that have been reported to be associated with respiratory morbidity or mortality (79 FR 75293; 75308).

This document is a prepublication version, signed by EPA Administrator, Gina McCarthy on 10/1/2015. We have taken steps to ensure the accuracy of this version, but it is not the official version.

considered the HREA's epidemiology-based risk estimates for O_3-associated morbidity or mortality (U.S. EPA, 2014a, Chapter 7). Compared to the weight given to the evidence from controlled human exposure studies, and to HREA estimates of exposures of concern and lung function risks, she placed relatively less weight on epidemiology-based risk estimates. In doing so, she noted that the overall conclusions from the HREA likewise reflect relatively less confidence in estimates of epidemiology-based risks than in estimates of exposures of concern and lung function risks.

In considering epidemiology-based risk estimates, the Administrator focused on risks associated with O_3 concentrations in the upper portions of ambient distributions, given the greater uncertainty associated with the shapes of concentration-response curves for O_3 concentrations in the lower portions of ambient distributions (i.e., below about 20 to 40 ppb depending on the O_3 metric, health endpoint, and study population) (U.S. EPA, 2013a, section 2.5.4.4). The Administrator further noted that experimental studies provide the strongest evidence for O_3-induced effects following exposures to O_3 concentrations corresponding to the upper portions of typical ambient distributions. In particular, as discussed above, she noted controlled human exposure studies showing respiratory effects following exposures to O_3 concentrations at or above 60 ppb (79 FR 75308, December 17, 2014). Therefore, in considering risks associated with O_3 concentrations in the upper portions of ambient distributions, the Administrator focused on the extent to which revised standards with levels of 70 or 65 ppb are estimated to reduce the risk of premature deaths associated with area-wide O_3 concentrations at or above 40 ppb and 60 ppb.

Given all of the above evidence, exposure/risk information, and advice from CASAC, the Administrator proposed to revise the level of the current primary O_3 standard to within the range

This document is a prepublication version, signed by EPA Administrator, Gina McCarthy on 10/1/2015. We have taken steps to ensure the accuracy of this version, but it is not the official version.

of 65 to 70 ppb. In considering CASAC advice on the range of standard levels, the Administrator placed a large amount of weight on CASAC's conclusion that there is adequate scientific evidence to consider a range of levels for a primary standard that includes an upper end at 70 ppb. She also noted that although CASAC expressed concern about the margin of safety at a level of 70 ppb, it further acknowledged that the choice of a level within the range recommended based on scientific evidence is a policy judgment (Frey, 2014c, p. ii). While she agreed with CASAC that it is appropriate to consider levels below 70 ppb, as reflected in her range of proposed levels from 65 to 70 ppb, for the reasons discussed above she also concluded that a standard level as high as 70 ppb, which CASAC concluded could be supported by the scientific evidence, could reasonably be judged to be requisite to protect public health with an adequate margin of safety.

In considering the appropriateness of standard levels below 65 ppb, the Administrator noted the conclusions of the PA and the advice of CASAC that it would be appropriate for her to consider standard levels as low as 60 ppb. In making the decision to not propose levels below 65 ppb, she focused on CASAC's rationale for a level of 60 ppb, which focused on the importance of limiting exposures to O_3 concentrations as low as 60 ppb (Frey, 2014c, p. 7). As discussed above, the Administrator agreed that it is appropriate to consider the implications of a revised standard level for estimated exposures of concern at or above 60 ppb. She noted that standards within the proposed range of 65 to 70 ppb would be expected to substantially limit the occurrence of exposures of concern to O_3 concentrations at or above 60 ppb, particularly the occurrence of two or more exposures. When she further considered that not all exposures of concern lead to adverse effects, and that the NAAQS are not meant to be zero-risk or background standards, the Administrator judged that alternative standard levels below 65 ppb are not needed

This document is a prepublication version, signed by EPA Administrator, Gina McCarthy on 10/1/2015. We have taken steps to ensure the accuracy of this version, but it is not the official version.

to further reduce such exposures.

b. Comments on Level

A number of groups representing medical, public health, or environmental organizations; some state agencies; and many individuals submitted comments on the appropriate level of a revised primary O_3 standard.[128] Virtually all of these commenters supported setting the standard level within the range recommended by CASAC (i.e., 60 to 70). Some expressed support for the overall CASAC range, without specifying a particular level within that range, while others expressed a preference for the lower part of the CASAC range, often emphasizing support for a level of 60 ppb. Some of these commenters stated that if the EPA does not set the level at 60 ppb, then the level should be set no higher than 65 ppb (i.e., the lower bound of the proposed range of standard levels).

To support their views on the level of a revised standard, some commenters focused on overarching issues related to the statutory requirements for the NAAQS. For example, some commenters maintained that the primary NAAQS must be set at a level at which there is an absence of adverse effects in sensitive populations. While this argument has some support in the case law and in the legislative history to the 1970 CAA (see *Lead Industries Ass'n v. EPA*, 647 F. 2d 1147, 1153 (D.C. Cir. 1980)), it is well established that the NAAQS are not meant to be zero risk standards. See *Lead Industries v. EPA*, 647 F.2d at 1156 n.51; *Mississippi v. EPA*, 744 F. 3d at 1351. From the inception of the NAAQS standard-setting process, the EPA and the

[128] In general, commenters who expressed the view that the EPA should retain the current O_3 NAAQS (i.e., commenters representing industry and business groups, and some states) did not provide comments on alternative standard levels. As a result, this section focuses primarily on comments from commenters who expressed support for the proposed decision to revise the current primary O_3 standard.

This document is a prepublication version, signed by EPA Administrator, Gina McCarthy on 10/1/2015. We have taken steps to ensure the accuracy of this version, but it is not the official version.

courts have acknowledged that scientific uncertainties in general, and the lack of clear thresholds in pollutant effects in particular, preclude any such definitive determinations. *Lead Industries*, 647 F. 2d at 1156 (setting standard at a level which would remove most but not all sub-clinical effects). Likewise, the House report to the 1977 amendments addresses this question (H. Rep. 95-294, 95th Cong. 1st sess. 127):[129]

> Some have suggested that since the standards are to protect against all known or anticipated effects and since no safe threshold can be established, the ambient standards should be set at zero or background levels. Obviously, this no-risk philosophy ignores all economic and social consequences and is impractical. This is particularly true in light of the legal requirement for mandatory attainment of the national primary standards within 3 years.

Thus, post-1970 jurisprudence makes clear the impossibility, and lack of legal necessity, for NAAQS removing all health risk. See *ATA III*, 283 F. 3d at 360 ("[t]he lack of a threshold concentration below which these pollutants are known to be harmless makes the task of setting primary NAAQS difficult, as EPA must select standard levels that reduce risks sufficiently to protect public health even while recognizing that a zero-risk standard is not possible"); *Mississippi*, 744 F. 3d at 1351 (same); see also id. at 1343 ("[d]etermining what is 'requisite' to protect the 'public health' with an 'adequate' margin of safety may indeed require a contextual assessment of acceptable risk. See *Whitman*, 531 U.S. at 494-95 (Breyer J. concurring)").

In this review, EPA is setting a standard based on a careful weighing of available evidence, including a weighing of the strengths and limitations of the evidence and underlying scientific uncertainties therein. The Administrator's choice of standard level is rooted in her

[129] Similarly, Senator Muskie remarked during the floor debates on the 1977 Amendments that "there is no such thing as a threshold for health effects. Even at the national primary standard level, which is the health standard, there are health effects that are not protected against". 123 Cong. Rec. S9423 (daily ed. June 10, 1977).

This document is a prepublication version, signed by EPA Administrator, Gina McCarthy on 10/1/2015. We have taken steps to ensure the accuracy of this version, but it is not the official version.

evaluation of the evidence, which reflects her legitimate uncertainty as to the O_3 concentrations at which the public would experience adverse health effects. This is a legitimate, and well recognized, exercise of "reasoned decision-making." *ATA III*. 283 F. 3d at 370; see also id. at 370 ("EPA's inability to guarantee the accuracy or increase the precision of the … NAAQS in no way undermines the standards' validity. Rather, these limitations indicate only that significant scientific uncertainty remains about the health effects of fine particulate matter at low atmospheric concentration…."); *Mississippi*, 744 F. 3d at 1352-53 (appropriate for EPA to balance scientific uncertainties in determining level of revised O_3 NAAQS).

In an additional overarching comment, some commenters also fundamentally objected to the EPA's consideration of exposure estimates in reaching conclusions on the primary O_3 standard. These commenters' general assertion was that NAAQS must be established so as to be protective, with an adequate margin of safety, regardless of the activity patterns that feed into exposure estimates. They contended that "[a]ir quality standards cannot rely on avoidance behavior in order to protect the public health and sensitive groups" and that "[i]t would be unlawful for EPA to set the standard at a level that is contingent upon people spending most of their time indoors" (e.g., ALA et al., p. 124). To support these comments, for example, ALA et al. analyzed ambient monitoring data from Core-Based Statistical Areas (CBSAs) with design values between 66-70 ppb (Table 17, pp. 145-151 in ALA et al.) and 62-65 ppb (Table 18, pp. 153-154 in ALA et al.) and pointed out that there are many more days with ambient concentrations above the benchmark levels than were estimated in the EPA's exposure analysis (i.e., at and above the benchmark level of 60, 70 and 80 ppb).

The EPA disagrees with these commenters' conclusions regarding the appropriateness of considering exposure estimates, and notes that NAAQS must be "requisite" (i.e., "sufficient, but

This document is a prepublication version, signed by EPA Administrator, Gina McCarthy on 10/1/2015. We have taken steps to ensure the accuracy of this version, but it is not the official version.

not more than necessary" (*Whitman*, 531 U.S. at 473)) to protect the "public health" ("the health of the public" (*Whitman*, 531 U.S. at 465)). Estimating exposure patterns based on extensive available data[130] is a reasonable means of ascertaining that standards are neither under- nor over-protective, and that standards address issues of public health rather than health issues pertaining only to isolated individuals.[131] Behavior patterns are critical in assessing whether ambient concentrations of O_3 may pose a public health risk.[132] Exposures to ambient or near-ambient O_3 concentrations have only been shown to result in potentially adverse effects if the ventilation rates of people in the exposed populations are raised to a sufficient degree (e.g., through physical exertion) (U.S. EPA, 2013, section 6.2.1.1).[133] Ignoring whether such elevated ventilation rates are actually occurring, as advocated by these commenters, would not provide an accurate assessment of whether the public health is at risk. Indeed, a standard established without regard to behavior of the public would likely lead to a standard which is more stringent than necessary to protect the public health.

While setting the primary O_3 standard based only on ambient concentrations, without consideration of activity patterns and ventilation rates, would likely result in a standard that is

---

[130] The CHAD database used in the HREA's exposure assessment contains over 53,000 individual daily diaries including time-location-activity patterns for individuals of both sexes across a wide range of ages (U.S. EPA, 2014a, Chapter 5).

[131] CASAC generally agreed with the EPA's methodology for characterizing exposures of concern (Frey, 2014a, pp. 5-6).

[132] See 79 FR 75269 ("The activity pattern of individuals is an important determinant of their exposure. Variation in O_3 concentrations among various microenvironments means that the amount of time spent in each location, as well as the level of activity, will influence an individual's exposure to ambient O_3. Activity patterns vary both among and within individuals, resulting in corresponding variations in exposure across a population and over time" (internal citations omitted).

[133] For healthy young adults exposed at rest for 2 hours, 500 ppb is the lowest O_3 concentration reported to produce a statistically significant O_3-induced group mean FEV_1 decrement (U.S. EPA, 2013, section 6.2.1.1).

This document is a prepublication version, signed by EPA Administrator, Gina McCarthy on 10/1/2015. We have taken steps to ensure the accuracy of this version, but it is not the official version.

over-protective, the EPA also concludes that setting a standard based on the assumption that people will adjust their activities to avoid exposures on high-pollution days would likely result in a standard that is under-protective. The HREA's exposure assessment does not make this latter assumption.[134] The time-location-activity diaries that provided the basis for exposure estimates reflect actual variability in human activities. While some diary days may reflect individuals spending less time outdoors than would be typical for them, it is similarly likely that some days reflect individuals spending more time outdoors than would be typical. Considering the actual variability in time-location-activity patterns is at the least a permissible way of identifying standards that are neither over- nor under-protective.[135]

Further, the EPA sees nothing in the CAA that prohibits consideration of the O_3 exposures that could result in effects of public health concern. While a number of judicial opinions have upheld the EPA's decisions in other NAAQS reviews to place little weight on particular risk or exposure analyses (i.e., because of scientific uncertainties in those analyses), none of these opinions have suggested that such analyses are irrelevant because actual exposure patterns do not matter. See, e.g. *Mississippi*, 744 F. 3d at 1352-53; *ATA III*, 283 F. 3d at 373-74. Therefore, because behavior patterns are critical in assessing whether ambient concentrations of O_3 may pose a public health risk, the EPA disagrees with the views expressed by these commenters objecting to the consideration of O_3 exposures in reaching decisions on the primary

---

[134] The EPA was aware of the possibility of averting behavior during the development of the HREA, and that document includes sensitivity analyses to provide perspective on the potential role of averting behavior in modifying O_3 exposures. As discussed further above (II.B.2.c), these sensitivity analyses were limited and the results were discussed in the proposal within the context of uncertainties in the HREA assessment of exposures of concern.

[135] See *Mississippi*, 744 F. 3d at 1343 ("[d]etermining what is 'requisite' to protect the 'public health' with an 'adequate' margin of safety may indeed require a contextual assessment of acceptable risk. See *Whitman*, 531 U.S. at 494-95 (Breyer, J. concurring…))"

This document is a prepublication version, signed by EPA Administrator, Gina McCarthy on 10/1/2015. We have taken steps to ensure the accuracy of this version, but it is not the official version.

O_3 standard.

In addition to these overarching comments, a number of commenters supported their views on standard level by highlighting specific aspects of the scientific evidence, exposure/risk information, and/or CASAC advice. Key themes expressed by these commenters included the following: (1) controlled human exposure studies provide strong evidence of adverse lung function decrements and airway inflammation in healthy adults following exposures to O_3 concentrations as low as 60 ppb, and at-risk populations would be likely to experience more serious effects or effects at even lower concentrations; (2) epidemiologic studies provide strong evidence for associations with mortality and morbidity in locations with ambient O_3 concentrations below 70 ppb, and in many cases in locations with concentrations near and below 60 ppb; (3) quantitative analyses in the HREA are biased such that they understate O_3 exposures and risks, and the EPA's interpretation of lung function risk estimates is not appropriate and not consistent with other NAAQS; and (4) the EPA must give deference to CASAC advice, particularly CASAC's policy advice to set the standard level below 70 ppb. The next sections discuss comments related to each of these points, and provide the EPA's responses to those comments. More detailed discussion of individual comments, and the EPA's responses, is provided in the Response to Comments document.

i. Effects in Controlled Human Exposure Studies

Some commenters who advocated for a level of 60 ppb (or absent that, for 65 ppb) asserted that controlled human exposure studies have reported adverse respiratory effects in healthy adults following exposures to O_3 concentrations as low as 60 ppb. These commenters generally based their conclusions on the demonstration of FEV_1 decrements $\geq$ 10% and increased airway inflammation following exposures of healthy adults to 60 ppb O_3. They concluded that

This document is a prepublication version, signed by EPA Administrator, Gina McCarthy on 10/1/2015. We have taken steps to ensure the accuracy of this version, but it is not the official version.

even more serious effects would occur in at-risk populations exposed to 60 ppb O_3, and that such populations would experience adverse effects following exposures to O_3 concentrations below 60 ppb.

While the EPA agrees that information from controlled human exposure studies conducted at 60 ppb can help to inform the Administrator's decision on the standard level, the Agency does not agree that this information necessitates a level below 70 ppb. In fact, as discussed in the proposal, a revised O_3 standard with a level of 70 ppb can be expected to provide substantial protection against the effects shown to occur following various O_3 exposure concentrations, including those observed following exposures to 60 ppb. This is because the degree of protection provided by any NAAQS is due to the combination of all of the elements of the standard (i.e., indicator, averaging time, form, level). In the case of the 4th-high form of the O_3 NAAQS, which the Administrator is retaining in the current review (II.C.3), the large majority of days in areas that meet the standard will have 8-hour O_3 concentrations below the level of the standard, with most days well below the level. Therefore, as discussed in the proposal, in considering the degree of protection provided by an O_3 standard with a particular level, it is important to consider the extent to which that standard would be expected to limit population exposures of concern to the broader range of O_3 exposure concentrations shown in controlled human exposure studies to result in health effects. The Administrator's consideration of such exposures of concern is discussed below (II.C.4.c).

Another important part of the Administrator's consideration of exposure estimates is the extent to which she judges that adverse effects could occur following specific O_3 exposures. While controlled human exposure studies provide a high degree of confidence regarding the extent to which specific health effects occur following exposures to O_3 concentrations from 60 to

This document is a prepublication version, signed by EPA Administrator, Gina McCarthy on 10/1/2015. We have taken steps to ensure the accuracy of this version, but it is not the official version.

80 ppb, the Administrator notes that there are no universally accepted criteria by which to judge the adversity of the observed effects. Therefore, in making judgments about the extent to which the effects observed in controlled human exposure studies have the potential to be adverse, the Administrator considers the recommendations of ATS and advice from CASAC (II.A.1.c, above).

As an initial matter, with regard to the effects shown in controlled human exposure studies following O_3 exposures, the Administrator notes the following:

1. The largest respiratory effects, and the broadest range of effects, have been studied and reported following exposures to 80 ppb O_3 or higher, with most exposure studies conducted at these higher concentrations. Specifically, 6.6-hour exposures of healthy young adults to 80 ppb O_3, while engaged in quasi-continuous, moderate exertion, can decrease lung function, increase airway inflammation, increase respiratory symptoms, result in airway hyperresponsiveness, and decrease lung host defenses.
2. Exposures of healthy young adults for 6.6 hours to O_3 concentrations as low as 72 ppb, while engaged in quasi-continuous, moderate exertion, have been shown to both decrease lung function and result in respiratory symptoms.
3. Exposures of healthy young adults for 6.6 hours to O_3 concentrations as low as 60 ppb, while engaged in quasi-continuous, moderate exertion, have been shown to decrease lung function and to increase airway inflammation.

To inform her judgments on the potential adversity to public health of these effects reported in controlled human exposure studies, as in the proposal, the Administrator considers the ATS recommendation that "reversible loss of lung function in combination with the presence of symptoms should be considered adverse" (ATS, 2000a). She notes that this combination of

This document is a prepublication version, signed by EPA Administrator, Gina McCarthy on 10/1/2015. We have taken steps to ensure the accuracy of this version, but it is not the official version.

effects has been shown to occur following 6.6-hour exposures to O_3 concentrations at or above 72 ppb. In considering these effects, CASAC observed that "the combination of decrements in FEV_1 together with the statistically significant alterations in symptoms in human subjects exposed to 72 ppb ozone meets the American Thoracic Society's definition of an adverse health effect" (Frey, 2014c, p. 5).

Regarding the potential for adverse effects following exposures to lower concentrations, the Administrator notes the CASAC judgment that the adverse combination of lung function decrements and respiratory symptoms "almost certainly occur in some people" following exposures to O_3 concentrations below 72 ppb (Frey, 2014c, p. 6). In particular, when commenting on the extent to which the study by Schelegle et al. (2009) suggests the potential for adverse effects following O_3 exposures below 72 ppb, CASAC judged that:

> [I]f subjects had been exposed to ozone using the 8-hour averaging period used in the standard [rather than the 6.6-hour exposures evaluated in the study], adverse effects could have occurred at lower concentration. Further, in our judgment, the level at which adverse effects might be observed would likely be lower for more sensitive subgroups, such as those with asthma (Frey, 2014c, p. 5).

Though CASAC did not provide advice as to how far below 72 ppb adverse effects would likely occur, the Administrator agrees that such effects could occur following exposures at least somewhat below 72 ppb.

The Administrator notes that while adverse effects could occur following exposures at least somewhat below 72 ppb, the combination of statistically significant increases in respiratory symptoms and decrements in lung function has not been reported following 6.6-hour exposures to average O_3 concentrations of 60 ppb or 63 ppb, though studies have evaluated the potential for such effects (Adams, 2006; Schelegle et al., 2009; Kim et al., 2011). In the absence of this combination, the Administrator looks to additional ATS recommendations and CASAC advice in

This document is a prepublication version, signed by EPA Administrator, Gina McCarthy on 10/1/2015. We have taken steps to ensure the accuracy of this version, but it is not the official version.

order to inform her judgments regarding the potential adversity of the effects that have been observed following O_3 exposures as low as 60 ppb.

With regard to ATS, she first notes the recommendations that "a small, transient loss of lung function, by itself, should not automatically be designated as adverse" and that "[f]ew…biomarkers have been validated sufficiently that their responses can be used with confidence to define the point at which a response should be equated to an adverse effect warranting preventive measures" (ATS, 2000a).[136] Based on these recommendations, compared to effects following exposures at or above 72 ppb, the Administrator has less confidence in the adversity of the respiratory effects that have been observed following exposures to 60 or 63 ppb.

She further notes that some commenters who advocated for a level of 60 ppb also focused on ATS recommendations regarding population-level risks. These commenters specifically stated that lung function decrements "may be adverse in terms of 'population risk,' where exposure to air pollution increases the risk to the population even though it might not harm lung function to a degree that is, on its own, 'clinically important' to an individual" (e.g., ALA et al., p. 118). These commenters asserted that the EPA has not appropriately considered the potential for such population-level risk. Contrary to the views expressed by these commenters, the Administrator carefully considers the potential for population risk, particularly within the context of the ATS recommendation that "a shift in the risk factor distribution, and hence the risk profile of the exposed population, should be considered adverse, even in the absence of the immediate occurrence of frank illness" (ATS, 2000a). Given that exposures to 60 ppb O_3 have been shown

[136] With regard to this latter recommendation, as discussed above (II.A.1.c), the ATS concluded that elevations of biomarkers such as cell numbers and types, cytokines, and reactive oxygen species may signal risk for ongoing injury and more serious effects or may simply represent transient responses, illustrating the lack of clear boundaries that separate adverse from nonadverse events.

This document is a prepublication version, signed by EPA Administrator, Gina McCarthy on 10/1/2015. We have taken steps to ensure the accuracy of this version, but it is not the official version.

in controlled human exposure studies to cause transient and reversible decreases in group mean lung function, the Administrator notes the potential for such exposures to result in similarly transient and reversible shifts in the risk profile of an exposed population. However, in contrast to commenters who advocated for a level of 60 ppb, the Administrator also notes that the available evidence does not provide information on the extent to which a short-term, transient decrease in lung function in a population, as opposed to a longer-term or permanent decrease, could affect the risk of other, more serious respiratory effects (i.e., change the risk profile of the population). This uncertainty, together with the additional ATS recommendations noted above, indicates to the Administrator that her judgment that there is uncertainty in the adversity of the effects shown to occur at 60 ppb is consistent with ATS recommendations.[137]

With regard to CASAC advice, the Administrator notes that, while CASAC clearly advised the EPA to consider the health effects shown to occur following exposures to 60 ppb O_3, its advice regarding the adversity of those effects is less clear. In particular, she notes that CASAC was conditional about whether the lung function decrements observed in some people at 60 ppb (i.e., FEV_1 decrements ≥ 10%) are adverse. Specifically, CASAC stated that these decrements "*could* be adverse in individuals with lung disease" (Frey, 2014c, p. 7, emphasis added) and that they provide a "*surrogate* for adverse health outcomes for people with asthma and lung disease" (Frey, 2014c, p. 3, emphasis added). Further, CASAC did not recommend considering standard levels low enough to eliminate O_3-induced FEV_1 decrements ≥ 10% (Frey, 2014c). With regard to the full range of effects shown to occur at 60 ppb (i.e., FEV_1 decrements,

[137] ATS provided additional recommendations to help inform judgments regarding the adversity of air pollution-related effects (e.g., related to "quality of life"), though it is not clear whether, or how, such recommendations should be applied to the respiratory effects observed in controlled human exposure studies following 6.6-hour O_3 exposures (ATS, 200a, p. 672).

This document is a prepublication version, signed by EPA Administrator, Gina McCarthy on 10/1/2015. We have taken steps to ensure the accuracy of this version, but it is not the official version.

airway inflammation), CASAC stated that exposures of concern for the 60 ppb benchmark are "*relevant for consideration*" with respect to people with asthma (Frey, 2014c, p. 6, italics added). In addition, "[t]he CASAC concurs with EPA staff regarding the finding based on scientific evidence that a level of 60 ppb corresponds to the lowest exposure concentration demonstrated to result in lung function decrements large enough to be judged an abnormal response by ATS and that *could be adverse* in individuals with lung disease" (Frey, 2014c, p. 7, italics added). The Administrator contrasts these statements with CASAC's clear advice that "the combination of decrements in FEV_1 together with the statistically significant alterations in symptoms in human subjects exposed to 72 ppb ozone meets the American Thoracic Society's definition of an adverse health effect" (Frey, 2014c, p. 5).

Based on her consideration of all of the above recommendations and advice noted above, the Administrator judges that, compared to exposure concentrations at and above 72 ppb, there is greater uncertainty with regard to the adversity of effects shown to occur following O_3 exposures as low as 60 ppb. However, based on the effects that have been shown to occur at 60 ppb (i.e., lung function decrements, airway inflammation), and CASAC advice indicating the importance of considering these effects (though its advice regarding the adversity of effects at 60 ppb is less clear), she concludes that it is appropriate to give some consideration to the extent to which a revised standard could allow such effects.

In considering estimates of exposures of concern for the 60, 70, and 80 ppb benchmarks within the context of her judgments on adversity, the Administrator notes that, due to interindividual variability in responsiveness, not every occurrence of an exposure of concern will result in an adverse effect. As discussed above (II.B.2.b.i), this point was highlighted by some commenters who opposed revision of the current standard, based on their analysis of effects

This document is a prepublication version, signed by EPA Administrator, Gina McCarthy on 10/1/2015. We have taken steps to ensure the accuracy of this version, but it is not the official version.

shown to occur following exposures to 72 ppb O_3. This point was also highlighted by some commenters who advocated for a level of 60 ppb, based on the discussion of O_3-induced inflammation in the proposal. In particular, this latter group of commenters highlighted discussion from the proposal indicating that "[i]nflammation induced by a single O_3 exposure can resolve entirely but, as noted in the ISA (U.S. EPA, 2013a, p. 6-76), 'continued acute inflammation can evolve into a chronic inflammatory state'" (e.g., ALA et al., p. 48). Consistent with these comments, and with her consideration of estimated exposurs of concern in the proposal, the Administrator judges that the types of respiratory effects that can occur following exposures of concern, particularly if experienced repeatedly, provide a plausible mode of action by which O_3 may cause other more serious effects. Because of this, as in the proposal, the Administrator is most concerned about protecting against repeated occurrences of exposures of concern.

The Administrator's consideration of estimated exposures of concern is discussed in more detail below (II.C.4.b.iv, II.C.4.c). In summary, contrary to the conclusions of commenters who advocated for a level of 60 ppb, the Administrator judges that a revised standard with a level of 70 ppb will effectively limit the occurrence of the O_3 exposures for which she is most confident in the adversity of the resulting effects (i.e., based on estimates for the 70 and 80 ppb benchmarks). She further concludes that such a standard will provide substantial protection against the occurrence of O_3 exposures for which there is greater uncertainty in the adversity of effects (i.e., based on estimates for the 60 ppb benchmark).

As noted above, commenters also pointed out that benchmark concentrations are based on studies conducted in healthy adults, whereas at-risk populations are likely to experience more serious effects and effects at lower O_3 exposure concentrations. In considering this issue, the

This document is a prepublication version, signed by EPA Administrator, Gina McCarthy on 10/1/2015. We have taken steps to ensure the accuracy of this version, but it is not the official version.

EPA notes CASAC's endorsement of 60 ppb as the lower end of the range of benchmarks for evaluation, and its advice that "the 60 ppb-8hr exposure benchmark is relevant for consideration with respect to adverse effects on asthmatics" (Frey, 2014c, p. 6). As discussed in detail below (II.C.4.c), the Administrator has carefully considered estimated exposures of concern for the 60 ppb benchmark. In addition, though the available information does not support the identification of specific benchmarks below 60 ppb that could be appropriate for consideration for at-risk populations, and though CASAC did not recommend consideration of any such benchmarks, the EPA expects that a revised standard with a level of 70 ppb will also reduce the occurrence of exposures to O_3 concentrations at least somewhat below 60 ppb (U.S. EPA, 2014a, Figures 4-9 and 4-10).[138] Thus, even if some members of at-risk populations may experience effects following exposures to O_3 concentrations somewhat below 60 ppb, a revised level of 70 ppb would be expected to reduce the occurrence of such exposures.[139] Therefore, the EPA has considered O_3 exposures that could be relevant for at-risk populations such as children and people with asthma, and does not agree that controlled human exposure studies reporting respiratory effects in healthy adults following exposures to 60 ppb O_3 necessitate a standard level below 70 ppb.

ii. Epidemiologic Studies

Commenters representing environmental and public health organizations also highlighted epidemiologic studies that, in their view, provide strong evidence for associations with mortality

[138] Air quality analyses in the HREA indicate that reducing the level of the primary standard from 75 ppb to 70 ppb will result in reductions in the O_3 concentrations in the upper portions of ambient distributions. This includes 8-hour ambient O_3 concentrations at, and somewhat below, 60 ppb (U.S. EPA, 2014a, Figures 4-9 and 4-10).

[139] The uncertainty associated with the potential adversity of any such effects would be even greater than that discussed above for the 60 ppb benchmark.

This document is a prepublication version, signed by EPA Administrator, Gina McCarthy on 10/1/2015. We have taken steps to ensure the accuracy of this version, but it is not the official version.

and morbidity in locations with ambient O_3 concentrations near and below 60 ppb. These commenters focused both on the epidemiologic studies evaluated in the PA's analyses of study location air quality (U.S. EPA, 2014c, Chapter 4) and on studies that were not explicitly analyzed in the PA, and in some cases on studies that were not included in the ISA.

The EPA agrees that epidemiologic studies can provide perspective on the degree to which O_3-associated health effects have been identified in areas with air quality likely to have met various standards. However, as discussed below, we do not agree with the specific conclusions drawn by these commenters regarding the implications of epidemiologic studies for the standard level. As an initial matter in considering epidemiologic studies, the EPA notes its decision, consistent with CASAC advice, to place the most emphasis on information from controlled human exposure studies (II.B.2 and II.B.3, above). This decision reflects the greater certainty in using information from controlled human exposure studies to link specific O_3 exposures with health effects, compared to using air quality information from epidemiologic studies of O_3 for this purpose.

While being aware of the uncertainties discussed above (II.B.2.b.ii), in considering what epidemiologic studies can tell us, the EPA notes analyses in the PA (U.S. EPA, 2014c, section 4.4.1) indicating that a revised standard with a level at or below 70 ppb would be expected to maintain distributions of short-term ambient O_3 concentrations below those present in the locations of all of the single-city epidemiologic studies analyzed. As discussed in the PA (U.S. EPA, 2014c, section 4.4.1), this includes several single-city studies conducted in locations that would have violated the current standard, and the study by Mar and Koenig (2009) that reported positive and statistically significant associations with respiratory emergency department visits with children and adults in a location that would have met the current standard over the entire

This document is a prepublication version, signed by EPA Administrator, Gina McCarthy on 10/1/2015. We have taken steps to ensure the accuracy of this version, but it is not the official version.

study period, but would have violated a standard with a level of 70 ppb.[140] While these analyses provide support for a level at least as low as 70 ppb, the Administrator judges that they do not provide a compelling basis for distinguishing between the appropriateness of 70 ppb and lower standard levels.

As in the proposal, the EPA acknowledges additional uncertainty in interpreting air quality in locations of multicity epidemiologic studies of short-term O_3 for the purpose of evaluating alternative standard levels (U.S. EPA, 2014c, sections 3.1.4.2, 4.4.1). In particular, the PA concludes that interpretation of such air quality information is complicated by uncertainties in the extent to which multicity effect estimates (i.e., which are based on combining estimates from multiple study locations) can be attributed to ambient O_3 in the subset of study locations that would have met a particular standard, versus O_3 in the study locations that would have violated the standard. While giving only limited weight to air quality analyses in these study areas because of this uncertainty, the EPA also notes PA analyses indicating that a standard level at or below 70 ppb would require additional reductions, beyond those required by the current standard, in the ambient O_3 concentrations that provided the basis for statistically significant O_3 health effect associations in multicity epidemiologic studies. As was the case for the single-city studies, and contrary to the views expressed by the commenters noted above, the Administrator judges that these studies do not provide a compelling basis for distinguishing between the appropriateness of alternative standard levels at or below 70 ppb.

In some cases, commenters highlighted studies that were assessed in the 2008 review of

[140] As noted above (II.B.2.b.ii and II.B.3), the studies by Silverman and Ito (2010) and Strickland et al. (2010) provided support for the Administrator's decision to revise the current primary O_3 standard, but do not provide insight into the appropriateness of specific standard levels below 75 ppb.

This document is a prepublication version, signed by EPA Administrator, Gina McCarthy on 10/1/2015. We have taken steps to ensure the accuracy of this version, but it is not the official version.

the O_3 NAAQS, but were not included in the ISA in the current review. These commenters asserted that such studies support the occurrence of O_3 health effect associations in locations with air quality near or, in some cases, below 60 ppb. Specifically, commenters highlighted a number of studies included in the 2007 Staff Paper that were not included in the ISA, claiming that these studies support a standard level below 70 ppb, and as low as 60 ppb.

As an initial matter with regard to these studies, the EPA notes that the focus of the ISA is on assessing the most policy-relevant scientific evidence. In the current review, the ISA considered over 1,000 new studies that have been published since the last review. Thus, it is not surprising that, as the body of evidence has been strengthened since the last review, some of the studies considered in the last review are no longer among the most policy relevant. However, based on the information included in the 2007 Staff Paper, the EPA does not agree that the studies highlighted by commenters provide compelling support for a level below 70 ppb. In fact, as discussed in the Staff Paper in the last review (U.S. EPA, 2007, p. 6-9; Appendix 3B), the O_3 concentrations reported for these studies, and the concentrations highlighted by commenters, were based on averaging across multiple monitors in study areas. Given that the highest monitor in an area is used to determine whether that area meets or violates the NAAQS, the averaged concentrations reported in the Staff Paper are thus not appropriate for direct comparison to the level of the O_3 standard. When the Staff Paper considered the O_3 concentrations measured at individual monitors for the subset of these study areas with particularly low concentrations, they were almost universally found to be above, and in many cases well above, even the current

This document is a prepublication version, signed by EPA Administrator, Gina McCarthy on 10/1/2015. We have taken steps to ensure the accuracy of this version, but it is not the official version.

standard level of 75 ppb.[141] Based on the above considerations, and consistent with the Administrator's overall decision to place less emphasis on air quality in locations of epidemiologic studies to select a standard level, the EPA disagrees with commenters who asserted that epidemiologic studies included in the last review, but not cited in the ISA or PA in this review, necessitate a level below 70 ppb. In fact, the EPA notes that these studies are consistent with the majority of the U.S. studies evaluated in the PA in the current review, in that most were conducted in locations that would have violated the current O_3 NAAQS over at least part of the study periods.

iii. Exposure and Risk Assessments

Some commenters supporting levels below 70 ppb also asserted that quantitative analyses in the HREA are biased such that they understate O_3 exposures of concern and risks of O_3-induced FEV_1 decrements. Many of these comments are discussed above within the context of the adequacy of the current standard (II.B.2.b.i), including comments pointing out that exposure and risk estimates are based on information from healthy adults rather than at-risk populations; comments noting that the exposure assessment evaluates 8-hour O_3 exposures rather than the 6.6-hour exposures used in controlled human exposure studies; and comments asserting that the EPA's exposure and risk analyses rely on people staying indoors on high pollution days (i.e., averting behavior).

[141] For one study conducted in Vancouver, where data from individual monitors did indicate ambient concentrations below the level of the current standard (Vedal et al., 2003), the Staff Paper noted that the study authors questioned whether O_3, other gaseous pollutants, and PM in this study may be acting as surrogate markers of pollutant mixes that contain more toxic compounds, "since the low measured concentrations were unlikely, in their opinion, to cause the observed effects" (U.S. EPA, 2007, p. 6-16). The Staff Paper further noted that another study conducted in Vancouver failed to find statistically significant associations with O_3 (Villeneuve et al., 2003).

This document is a prepublication version, signed by EPA Administrator, Gina McCarthy on 10/1/2015. We have taken steps to ensure the accuracy of this version, but it is not the official version.

As discussed in section II.B.2.b.i above, while the EPA agrees with certain aspects of these commenters' assertions, we do not agree with their overall conclusions. In particular, there are aspects of the HREA's quantitative analyses that, if viewed in isolation, would tend to either overstate or understate O_3 exposures and/or health risks. While commenters tended to focus on those aspects of the assessments that support their position, they tended to ignore aspects of the assessments that do not support their position (points that were often raised by commenters on the other side of the issue). Rather than viewing the potential implications of these aspects of the HREA assessments in isolation, the EPA considers them together, along with other issues and uncertainties related to the interpretation of exposure and risk estimates.

For example, some commenters who advocated for a level below 70 ppb asserted that the exposure assessment could underestimate O_3 exposures for highly active populations, including outdoor workers and children who spend a large portion of time outdoors during summer. In support of these assertions, commenters highlighted sensitivity analyses conducted in the HREA. However, as noted in the HREA (U.S. EPA, 2014a, Table 5-10), this aspect of the assessment is likely to have only a "low to moderate" impact on the magnitude of exposure estimates. To put this magnitude in perspective, HREA sensitivity analyses conducted in a single urban study area indicate that, regardless of whether exposure estimates for children are based on all available diaries or on a subset of diaries restricted to simulate highly exposed children, a revised standard with a level of 70 ppb is estimated to protect more than 99% of children from experiencing two or more exposures of concern at or above 70 ppb (U.S. EPA, 2014a, Chapter 5 Appendices,

This document is a prepublication version, signed by EPA Administrator, Gina McCarthy on 10/1/2015. We have taken steps to ensure the accuracy of this version, but it is not the official version.

Figure 5G-9).[142, 143] In contrast to the focus of commenters who supported a level below 70 ppb, other aspects of quantitative assessments, some of which were highlighted by commenters who opposed revising the current standard (II.B.2), tend to result in overestimates of O_3 exposures. These aspects are characterized in the HREA as having either a "low," a "low-to-moderate," or a "moderate" impact on the magnitudes of exposure estimates.

In its reviews of the HREA and PA, CASAC recognized many of the uncertainties and issues highlighted by commenters. Even considering these uncertainties, CASAC endorsed the approaches adopted by the EPA to assess O_3 exposures and health risks, and CASAC used exposure and risk estimates as part of the basis for their recommendations on the primary O_3 NAAQS (Frey, 2014c). Thus, as discussed in section II.B.2.b.i above, the EPA disagrees with commenters who claim that the aspects of the quantitative assessments that they highlight lead to overall underestimates of exposures or health risks.[144]

Some commenters further contended that the level of the primary O_3 standard should be set below 70 ppb in order to compensate for the use of a form that allows multiple days with

---

[142] More specifically, based on all children's diaries, just under 0.1% of children are estimated to experience two or more exposures of concern at or above 70 ppb. Based on simulated profiles of highly exposed children, this estimate increased to just over 0.1% (U.S. EPA, 2014a, Chapter 5 Appendices, Figure 5G-9).

[143] In addition, when diaries were selected to mimic exposures that could be experienced by outdoor workers, the percentages of modeled individuals estimated to experience exposures of concern were generally similar to the percentages estimated for children (i.e., using the full database of diary profiles) in the worst-case cities and years (i.e., cities and years with the highest exposure estimates) (U.S. EPA, 2014, section 5.4.3.2, Figure 5-14).

[144] As discussed in II.B.2.b above, in weighing the various uncertainties, which can bias exposure results in different directions but tend to have impacts that are similar in magnitude (U.S. EPA, 2014a, Table 5-10), and in light of CASAC's advice based on its review of the HREA and the PA, the EPA continues to conclude that the approach to considering estimated exposures of concern in the HREA, PA, and the proposal reflects an appropriate balance, and provides an appropriate basis for considering the public health protectiveness of the primary O_3 standard.

This document is a prepublication version, signed by EPA Administrator, Gina McCarthy on 10/1/2015. We have taken steps to ensure the accuracy of this version, but it is not the official version.

concentrations higher than the standard level. These groups submitted air quality analyses to support their point that the current 4th-high form allows multiple days per year with ambient O_3 concentrations above the level of the standard. While the EPA does not dispute the air quality analyses submitted by these commenters, and agrees that 4th-high form allows multiple days per year with ambient O_3 concentrations above the level of the standard (3 days per year, on average over a 3-year period), the Agency disagrees with commenters' assertion that, because of this, the level of the primary O_3 standard should be set below 70 ppb. As discussed above (II.A.2), the quantitative assessments that informed the Administrator's proposed decision, presented in the HREA and considered in the PA and by CASAC, estimated O_3 exposures and health risks associated with air quality that "just meets" various standards with the current 8-hour averaging time and 4th-high, 3-year average form. Thus, in considering the degree of public health protection appropriate for the primary O_3 standard, the Administrator has considered quantitative exposure and risk estimates that are based a 4th-high form, and therefore on a standard that, as these commenters point out, allows multiple days per year with ambient O_3 concentrations above the level of the standard.

iv. CASAC Advice

Many commenters, including those representing major medical, public health, or environmental groups; some state agencies; and a large number of individual commenters, focused on CASAC advice in their rationale supporting levels below 70 ppb, and as low as 60 ppb. These commenters generally asserted that the EPA must give deference to CASAC. In some cases, these commenters expressed strong objections to a level of 70 ppb, noting CASAC policy advice that such a level would provide little margin of safety.

The EPA agrees that CASAC advice is an important consideration in reaching a decision

This document is a prepublication version, signed by EPA Administrator, Gina McCarthy on 10/1/2015. We have taken steps to ensure the accuracy of this version, but it is not the official version.

on the standard level (see e.g. CAA section 307 (d)(3)),[145] though not with commenters' conclusion that CASAC advice necessitates a standard level below 70 ppb. As discussed above (II.C.4.a), the Administrator carefully considered CASAC advice in the proposal, and she judged that her proposed decision to revise the level to within the range of 65 to 70 ppb was consistent with CASAC advice, based on the available science.

As in the proposal, in her final decision on level the Administrator notes CASAC's overall conclusion that "based on the scientific evidence from clinical studies, epidemiologic studies, animal toxicology studies, as summarized in the ISA, the findings from the exposure and risk assessments as summarized in the HREA, and the interpretation of the implications of all of these sources of information as given in the Second Draft PA…there is adequate scientific evidence to recommend a range of levels for a revised primary ozone standard from 70 ppb to 60 ppb" (Frey, 2014c, p. 8). Thus, CASAC used the health evidence and exposure/risk information to inform its range of recommended standard levels, a range that included an upper bound of 70 ppb based on the scientific evidence, and it did not use the evidence and information to recommend setting the primary O_3 standard at any specific level within the range of 70 to 60 ppb. In addition, CASAC further stated that "the choice of a level within the range recommended based on scientific evidence [i.e., 70 to 60 ppb] is a policy judgment under the statutory mandate of the Clean Air Act" (Frey, 2014c, p. ii).

In addition to its advice based on the scientific evidence, CASAC offered the "policy advice" to set the level below 70 ppb, stating that a standard level of 70 ppb "may not meet the

[145] The EPA notes, of course, that the CAA places the responsibility for judging what standard is requisite with the Administrator and only requires that, if her decision differs in important ways from CASAC's advice, she explain her reasoning for differing.

This document is a prepublication version, signed by EPA Administrator, Gina McCarthy on 10/1/2015. We have taken steps to ensure the accuracy of this version, but it is not the official version.

statutory requirement to protect public health with an adequate margin of safety" (Frey, 2014c, p. ii). In supporting its policy advice to set the level below 70 ppb, CASAC noted the respiratory effects that have been shown to occur in controlled human exposure studies following exposures from 60 to 80 ppb O_3, and the extent to which various standard levels are estimated to allow the occurrence of population exposures that can result in such effects (Frey, 2014c, pp. 7-8).

The EPA agrees that an important consideration when reaching a decision on level is the extent to which a revised standard is estimated to allow the types of exposures shown in controlled human exposure studies to cause respiratory effects. In reaching her final decision that a level of 70 ppb is requisite to protect public health with an adequate margin of safety (II.C.4.c, below), the Administrator carefully considers the potential for such exposures and effects. In doing so, she emphasizes the importance of setting a standard that limits the occurrence of the exposures about which she is most concerned (i.e., those for which she has the most confidence in the adversity of the resulting effects, which are repeated exposures of concern at or above 70 or 80 ppb, as discussed above in II.C.4.b.i). Based on her consideration of information from controlled human exposure studies in light of CASAC advice and ATS recommendations, the Administrator additionally judges that there is important uncertainty in the extent to which the effects shown to occur following exposures to 60 ppb O_3 are adverse to public health (discussed above, II.C.4.b.i and II.C.4.b.iii). However, based on the effects that have been shown to occur, CASAC advice indicating the importance of considering these effects, and ATS recommendations indicating the potential for adverse population-level effects (II.C.4.b.i, II.C.4.b.iii), she concludes that it is appropriate to give some consideration to the extent to which a revised standard could allow the respiratory effects that have been observed following exposures to 60 ppb O_3.

This document is a prepublication version, signed by EPA Administrator, Gina McCarthy on 10/1/2015. We have taken steps to ensure the accuracy of this version, but it is not the official version.

When considering the extent to which a revised standard could allow O_3 exposures that have been shown in controlled human exposures studies to result in respiratory effects, the Administrator is most concerned about protecting the public, including at-risk populations, against repeated occurrences of such exposures of concern (II.C.4.b.i, above). In considering the appropriate metric for evaluating repeated occurrences of exposures of concern, the Administrator acknowledges that it is not clear from the evidence, or from the ATS recommendations, CASAC advice, or public comments, how particular numbers of exposures of concern could impact the seriousness of the resulting effects, especially at lower exposure concentrations. Therefore, the Administrator judges that focusing on HREA estimates of two or more exposures of concern provides a health-protective approach to considering the potential for repeated occurrences of exposures of concern that could result in adverse effects. She notes that other possible metrics for considering repeated occurrences of exposures of concern (e.g., 3 or more, 4 or more, etc.) would result in smaller exposure estimates.

As discussed further below (II.C.4.c), the Administrator notes that a revised standard with a level of 70 ppb is estimated to eliminate the occurrence of two or more exposures of concern to O_3 concentrations at or above 80 ppb and to virtually eliminate the occurrence of two or more exposures of concern to O_3 concentrations at or above 70 ppb (Table 1, above). For the 70 ppb benchmark, this reflects about a 90% reduction in the number of children estimated to experience two or more exposures of concern, compared to the current standard.[146] Even considering the worst-case urban study area and worst-case year evaluated in the HREA, a standard with a level

[146] Percent reductions in this section refer to reductions in the number of children in HREA urban study areas (averaged over the years evaluated in the HREA) estimated to experience exposures of concern, based on the information in Table 1 above.

This document is a prepublication version, signed by EPA Administrator, Gina McCarthy on 10/1/2015. We have taken steps to ensure the accuracy of this version, but it is not the official version.

of 70 ppb is estimated to protect more than 99% of children from experiencing two or more exposures of concern to O_3 concentrations at or above 70 ppb (Table 1).

Though the Administrator judges that there is greater uncertainty with regard to the occurrence of adverse effects following exposures as low as 60 ppb, she notes that a revised standard with a level of 70 ppb is estimated to protect the vast majority of children in urban study areas (i.e., about 96% to more than 99% in individual areas) from experiencing two or more exposures of concern at or above 60 ppb. Compared to the current standard, this represents a reduction of more than 60% in exposures of concern for the 60 ppb benchmark (Table 1). Given the Administrator's uncertainty regarding the adversity of the effects following exposures to 60 ppb O_3, and her health-protective approach to considering repeated occurrences of exposures of concern, the Administrator judges that this degree of protection is appropriate and that it reflects substantial protection against the occurrence of O_3-induced effects, including effects for which she judges the adversity to public health is uncertain.

While being less concerned about single occurrences of exposures of concern, especially at lower exposure concentrations, the Administrator also notes that a standard with a level of 70 ppb is estimated to (1) virtually eliminate all occurrences of exposures of concern at or above 80 ppb; (2) protect ≥ about 99% of children in urban study areas from experiencing any exposures of concern at or above 70 ppb; and (3) to achieve substantial reductions (i.e., about 50%), compared to the current standard, in the occurrence of one or more exposures of concern at or above 60 ppb (Table 1).

Given the information and advice noted above (and in II.C.4.b.i, II.C.4.b.iii), the Administrator judges that a revised standard with a level of 70 ppb will effectively limit the occurrence of the O_3 exposures for which she has the most confidence in the adversity of the

This document is a prepublication version, signed by EPA Administrator, Gina McCarthy on 10/1/2015. We have taken steps to ensure the accuracy of this version, but it is not the official version.

resulting effects (i.e., based on estimates for the 70 and 80 ppb benchmarks). She further judges that such a standard will provide a large degree of protection against O_3 exposures for which there is greater uncertainty in the adversity of effects (i.e., those observed following exposures to 60 ppb O_3), contributing to the margin of safety of the standard. See M*ississippi*, 744 F. 3d at 1353 ("By requiring an 'adequate margin of safety', Congress was directing EPA to build a buffer to protect against uncertain and unknown dangers to human health"). Given the considerable protection provided against repeated exposures of concern for all of the benchmarks evaluated, including the 60 ppb benchmark, the Administrator judges that a standard with a level of 70 ppb will provide an adequate margin of safety against the adverse O_3-induced effects shown to occur following exposures at or above 72 ppb, and judged by CASAC likely to occur following exposures somewhat below 72 ppb.[147]

Contrary to the conclusions of commenters who advocated for a level below 70 ppb, the Administrator notes that her final decision is consistent with CASAC's advice, based on the scientific evidence, and with CASAC's focus on setting a revised standard to further limit the occurrence of the respiratory effects observed in controlled human exposure studies, including effects observed following exposures to 60 ppb O_3. Given her judgments and conclusions discussed above, and given that the CAA reserves the choice of the standard that is requisite to protect public health with an adequate margin of safety for the judgment of the EPA

[147] As discussed above (II.C.4.b.i), when commenting on the extent to which the study by Schelegle et al. (2009) suggests the potential for adverse effects following O_3 exposures below 72 ppb, CASAC stated the following: "[I]f subjects had been exposed to ozone using the 8-hour averaging period used in the standard [rather than the 6.6-hour exposures evaluated in the study], adverse effects could have occurred at lower concentration. Further, in our judgment, the level at which adverse effects might be observed would likely be lower for more sensitive subgroups, such as those with asthma" (Frey, 2014c, p. 5).

This document is a prepublication version, signed by EPA Administrator, Gina McCarthy on 10/1/2015. We have taken steps to ensure the accuracy of this version, but it is not the official version.

Administrator, she disagrees with commenters who asserted that CASAC advice necessitates a level below 70 ppb, and as low as 60 ppb. The Administrator's final conclusions on level are discussed in more detail below (II.C.4.c).

c. Administrator's Final Decision Regarding Level

Having carefully considered the public comments on the appropriate level of the primary O_3 standard, as discussed above and in the Response to Comments document, the Administrator believes her scientific and policy judgments in the proposal remain valid. In conjunction with her decisions to retain the current indicator, averaging time, and form (II.C.1 to II.C.3, above), the Administrator is revising the level of the primary O_3 standard to 70 ppb. In doing so, she is selecting a primary O_3 standard that is requisite to protect public health with an adequate margin of safety, in light of her judgments based on an interpretation of the scientific evidence and exposure/risk information that neither overstates nor understates the strengths and limitations of that evidence and information and the appropriate inferences to be drawn therefrom.

The Administrator's decision to revise the level of the primary O_3 standard to 70 ppb builds upon her conclusion that the overall body of scientific evidence and exposure/risk information calls into question the adequacy of public health protection afforded by the current standard, particularly for at-risk populations and lifestages (II.B.3).[148] Consistent with the proposal, her decision on level places the greatest emphasis on the results of controlled human exposure studies and on quantitative analyses based on information from these studies, particularly analyses of O_3 exposures of concern. As in the proposal, and as discussed further

[148] At-risk populations include people with asthma; children and older adults; people who are active outdoors, including outdoor workers; people with certain genetic variants; and people with reduced intake of certain nutrients.

This document is a prepublication version, signed by EPA Administrator, Gina McCarthy on 10/1/2015. We have taken steps to ensure the accuracy of this version, but it is not the official version.

below, she views the results of the lung function risk assessment, analyses of O_3 air quality in locations of epidemiologic studies, and epidemiology-based quantitative health risk assessments as providing information in support of her decision to revise the current standard, but a more limited basis for selecting a particular standard level among a range of options. See *Mississippi*, 744 F. 3d at 1351-52 (studies can legitimately support a decision to revise the standard, but not provide sufficient information to justify their use in setting the level of a revised standard).

Given her consideration of the evidence, exposure/risk information, advice from CASAC, and public comments, the Administrator judges that a standard with a level of 70 ppb is requisite to protect public health with an adequate margin of safety. She notes that the determination of what constitutes an adequate margin of safety is expressly left to the judgment of the EPA Administrator. See *Lead Industries Association v. EPA*, 647 F.2d at 1161-62; *Mississippi*, 744 F. 3d at 1353. She further notes that in evaluating how particular standards address the requirement to provide an adequate margin of safety, it is appropriate to consider such factors as the nature and severity of the health effects, the size of sensitive population(s) at risk, and the kind and degree of the uncertainties present (I.B, above). Consistent with past practice and long-standing judicial precedent, the Administrator takes the need for an adequate margin of safety into account as an integral part of her decision-making on the appropriate level, averaging time, form, and indicator of the standard.[149]

In considering the need for an adequate margin of safety, the Administrator notes that a standard with a level of 70 ppb O_3 would be expected to provide substantial improvements in public health, including for at-risk groups such as children and people with asthma. The

[149] See, e.g. *NRDC v. EPA*, 902 F. 2d 962, 973-74 (D.C. Cir. 1990).

This document is a prepublication version, signed by EPA Administrator, Gina McCarthy on 10/1/2015. We have taken steps to ensure the accuracy of this version, but it is not the official version.

following paragraphs summarize the basis for the Administrator's conclusion that a revised primary O_3 standard with a level of 70 ppb is requisite to protect the public health with an adequate margin of safety.

As an initial matter, consistent with her conclusions on the need for revision of the current standard (II.B.3), in reaching a decision on level the Administrator places the most weight on information from controlled human exposure studies. In doing so, she notes that controlled human exposure studies provide the most certain evidence indicating the occurrence of health effects in humans following specific O_3 exposures. In particular, she notes that the effects reported in controlled human exposure studies are due solely to O_3 exposures, and interpretation of study results is not complicated by the presence of co-occurring pollutants or pollutant mixtures (as is the case in epidemiologic studies). The Administrator also observes that her emphasis on information from controlled human exposure studies is consistent with CASAC's advice and interpretation of the scientific evidence (Frey, 2014c).

With regard to the effects shown in controlled human exposure studies following specific O_3 exposures, as discussed in more detail above (II.B, II.C.4.b.i), the Administrator notes that (1) the largest respiratory effects, and the broadest range of effects, have been studied and reported following exposures to 80 ppb O_3 or higher (i.e., decreased lung function, increased airway inflammation, increased respiratory symptoms, AHR, and decreased lung host defense); (2) exposures to O_3 concentrations as low as 72 ppb have been shown to both decrease lung function and result in respiratory symptoms; and (3) exposures to O_3 concentrations as low as 60 ppb have been shown to decrease lung function and to increase airway inflammation.

While such controlled human exposure studies provide a high degree of confidence regarding the occurrence of health effects following exposures to O_3 concentrations from 60 to

This document is a prepublication version, signed by EPA Administrator, Gina McCarthy on 10/1/2015. We have taken steps to ensure the accuracy of this version, but it is not the official version.

80 ppb, there are no universally accepted criteria by which to judge the adversity of the observed effects. To inform her judgments on the potential adversity to public health of effects reported in controlled human exposure studies, the Administrator considers ATS recommendations and CASAC advice, as described in detail above (II.B.2, II.C.4.b.i, II.C.4.b.iii, II.C.4.b.iv). Based on her consideration of such recommendations and advice, the Administrator is confident that the respiratory effects that have been observed following exposures to 72 ppb O_3 or above can be adverse. In addition, she judges that adverse effects are likely to occur following exposures somewhat below 72 ppb (II.C.4.b.i). However, as described above (II.C.4.b.i, II.C.4.b.iii, II.C.4.b.iv), the Administrator is notably less confident in the adversity to public health of the respiratory effects that have been observed following exposures to O_3 concentrations as low as 60 ppb, given her consideration of the following: (1) ATS recommendations indicating uncertainty in judging adversity based on lung function decrements alone; (2) uncertainty in the extent to which a short-term, transient population-level decrease in FEV_1 would increase the risk of other, more serious respiratory effects in that population (i.e., per ATS recommendations on population-level risk); and (3) compared to 72 ppb, CASAC advice is less clear regarding the potential adversity of effects at 60 ppb.

Taken together, the Administrator concludes that the evidence from controlled human exposure studies provides strong support for her conclusion that a revised standard with a level of 70 ppb is requisite to protect the public health with an adequate margin of safety. She bases this conclusion, in part, on the fact that such a standard level would be well below the O_3 exposure concentration shown to result in the widest range of respiratory effects (i.e., 80 ppb), and below the lowest O_3 exposure concentration shown to result in the adverse combination of lung function decrements and respiratory symptoms (i.e., 72 ppb). See *Lead Industries,* 647 F. 2d

This document is a prepublication version, signed by EPA Administrator, Gina McCarthy on 10/1/2015. We have taken steps to ensure the accuracy of this version, but it is not the official version.

at 1160 (setting NAAQS at level well below the level where the clearest adverse effects occur, and at a level eliminating most "sub-clinical effects" provides an adequate margin of safety).

As discussed above (II.C.4.b.i), the Administrator also notes that a revised O_3 standard with a level of 70 ppb can provide substantial protection against the broader range of O_3 exposure concentrations that have been shown in controlled human exposure studies to result in respiratory effects, including exposure concentrations below 70 ppb. The degree of protection provided by any NAAQS is due to the combination of all of the elements of the standard (i.e., indicator, averaging time, form, level) and, in the case of the 4th-high form of the revised primary O_3 standard (II.C.3), the large majority of days in areas that meet the revised standard will have 8-hour O_3 concentrations below 70 ppb, with most days having 8-hour O_3 concentrations well below this level. In addition, the degree of protection provided by the O_3 NAAQS is also dependent on the extent to which people experience health-relevant O_3 exposures in locations meeting the NAAQS. As discussed above, for a pollutant like O_3 where adverse responses are critically dependent on ventilation rates, the Administrator notes that it is important to consider activity patterns in the exposed population. Not considering activity patterns, and corresponding ventilation rates, can result in a standard that provides more protection than is requisite. Therefore, as discussed in the proposal, in considering the degree of protection provided by a revised primary O_3 standard, the Administrator considers the extent to which that standard would be expected to limit population exposures of concern (i.e., which take into account activity patterns and estimated ventilation rates) to the broader range of O_3 exposure concentrations shown to result in health effects.

Due to interindividual variability in responsiveness, the Administrator notes that not every occurrence of an exposure of concern will result in an adverse effect (II.C.4.b.i).

This document is a prepublication version, signed by EPA Administrator, Gina McCarthy on 10/1/2015. We have taken steps to ensure the accuracy of this version, but it is not the official version.

Moreover, repeated occurrences of some of the effects demonstrated following exposures of concern could increase the likelihood of adversity (U.S. EPA, 2013, Section 6.2.3, p. 6-76). In particular, she notes that the types of respiratory effects that can occur following exposures of concern, particularly if experienced repeatedly, provide a plausible mode of action by which O_3 may cause other more serious effects. Therefore, as in the proposal, the Administrator is most concerned about protecting at-risk populations against repeated occurrences of exposures of concern. In considering the appropriate metric for evaluating repeated occurrences of exposures of concern, the Administrator acknowledges that it is not clear from the evidence, or from the ATS recommendations, CASAC advice, or public comments, how particular numbers of exposures of concern could impact the seriousness of the resulting effects, especially at lower exposure concentrations. Therefore, the Administrator judges that focusing on HREA estimates of two or more exposures of concern provides a health-protective approach to considering the potential for repeated occurrences of exposures of concern that could result in adverse effects.

Based on her consideration of adversity discussed above, the Administrator places the most emphasis on setting a standard that appropriately limits repeated occurrences of exposures of concern at or above the 70 and 80 ppb benchmarks. She notes that a revised standard with a level of 70 ppb is estimated to eliminate the occurrence of two or more exposures of concern to O_3 concentrations at or above 80 ppb and to virtually eliminate the occurrence of two or more exposures of concern to O_3 concentrations at or above 70 ppb for all children and children with asthma, even in the worst-case year and location evaluated.

While she is less confident that adverse effects will occur following exposures to O_3 concentrations as low as 60 ppb, as discussed above, the Administrator judges that it is also appropriate to consider estimates of exposures of concern for the 60 ppb benchmark. Consistent

This document is a prepublication version, signed by EPA Administrator, Gina McCarthy on 10/1/2015. We have taken steps to ensure the accuracy of this version, but it is not the official version.

with this judgment, although CASAC advice regarding the potential adversity of effects at 60 ppb was less definitive than for effects at 72 ppb, CASAC did clearly advise the EPA to consider the extent to which a revised standard is estimated to limit the effects observed following 60 ppb exposures (Frey, 2014c). Therefore, the Administrator considers estimated exposures of concern for the 60 ppb benchmark, particularly considering the extent to which the health protection provided by a revised standard includes a margin of safety against the occurrence of adverse O_3-induced effects. The Administrator notes that a revised standard with a level of 70 ppb is estimated to protect the vast majority of children in urban study areas (i.e., about 96% to more than 99% of children in individual areas) from experiencing two or more exposures of concern at or above 60 ppb. Compared to the current standard, this represents a reduction of more than 60%.

Given the considerable protection provided against repeated exposures of concern for all of the benchmarks evaluated, including the 60 ppb benchmark, the Administrator judges that a standard with a level of 70 ppb will incorporate a margin of safety against the adverse O_3-induced effects shown to occur following exposures at or above 72 ppb, and judged likely to occur following exposures somewhat below 72 ppb.

While the Administrator is less concerned about single occurrences of O_3 exposures of concern, especially for the 60 ppb benchmark, she judges that estimates of one or more exposures of concern can provide further insight into the margin of safety provided by a revised standard. In this regard, she notes that a standard with a level of 70 ppb is estimated to (1) virtually eliminate all occurrences of exposures of concern at or above 80 ppb; (2) protect the vast majority of children in urban study areas from experiencing any exposures of concern at or above 70 ppb (i.e., ≥ about 99%, based on mean estimates; Table 1); and (3) to achieve

This document is a prepublication version, signed by EPA Administrator, Gina McCarthy on 10/1/2015. We have taken steps to ensure the accuracy of this version, but it is not the official version.

substantial reductions, compared to the current standard, in the occurrence of one or more exposures of concern at or above 60 ppb (i.e., about a 50% reduction; Table 1). The Administrator judges that these results provide further support for her conclusion that a standard with a level of 70 ppb will incorporate an adequate margin of safety against the occurrence of O_3 exposures that can result in effects that are adverse to public health.

The Administrator additionally judges that a standard with a level of 70 ppb would be expected to result in important reductions, compared to the current standard, in the population-level risk of O_3-induced lung function decrements (≥ 10%, ≥ 15%) in children, including children with asthma. Specifically, a revised standard with a level of 70 ppb is estimated to reduce the risk of two or more O_3-induced decrements by about 30% and 20% for decrements ≥ 15 and 10%, respectively (Table 2, above). However, as discussed above (II.C.4.b.i), the Administrator judges that there are important uncertainties in using lung function risk estimates as a basis for considering the occurrence of adverse effects in the population given (1) the ATS recommendation that "a small, transient loss of lung function, by itself, should not automatically be designated as adverse" (ATS, 2000a); (2) uncertainty in the extent to which a transient population-level decrease in FEV_1 would increase the risk of other, more serious respiratory effects in that population (i.e., per ATS recommendations on population-level risk); and (3) that CASAC did not advise considering a standard that would be estimated to eliminate O_3-induced lung function decrements ≥ 10 or 15% (Frey, 2014c). Moreover, as at proposal, the Administrator notes that the variability in lung function risk estimates across urban study areas is often greater than the differences in risk estimates between various standard levels (Table 2,

This document is a prepublication version, signed by EPA Administrator, Gina McCarthy on 10/1/2015. We have taken steps to ensure the accuracy of this version, but it is not the official version.

above).[150] Given this, and the resulting considerable overlap between the ranges of lung function risk estimates for different standard levels, the Administrator puts limited weight on the lung function risk estimates for distinguishing between the degrees of public health protection provided by alternative standard levels. Therefore, the Administrator judges that while a standard with a level of 70 ppb would be expected to result in important reductions, compared to the current standard, in the population-level risk of O_3-induced lung function decrements (≥10%, 15%) in children, including children with asthma, she also judges that estimated risks of O_3-induced lung function decrements provide a more limited basis than exposures of concern for distinguishing between the appropriateness of the health protection afforded by a standard level of 70 ppb versus lower levels.

The Administrator also considers the epidemiologic evidence and the quantitative risk estimates based on information from epidemiologic studies. As discussed in the proposal, and above in the EPA's responses to significant comments, although the Administrator acknowledges the important uncertainties in using the O_3 epidemiologic studies as a basis for selecting a standard level, she notes that these studies can provide perspective on the degree to which O_3-associated health effects have been identified in areas with air quality likely to have met various standards. Specifically, the Administrator notes analyses in the PA (U.S. EPA, 2014c, section 4.4.1) indicating that a revised standard with a level of 70 ppb would be expected to require additional reductions, beyond those required by the current standard, in the short- and long-term ambient O_3 concentrations that provided the basis for statistically significant O_3 health effect

[150] For example, the average percentage of children estimated to experience two or more decrements ≥ 10% ranges from approximately 6 to 11% for a standard level of 70 ppb, up to about 9% for a level of 65 ppb, and up to about 6% for a level of 60 ppb (Table 2, above).

This document is a prepublication version, signed by EPA Administrator, Gina McCarthy on 10/1/2015. We have taken steps to ensure the accuracy of this version, but it is not the official version.

associations in both the single-city and multicity epidemiologic studies evaluated. As discussed above in the response to comments, while the Administrator concludes that these analyses support a level at least as low as 70 ppb, based on a study reporting health effect associations in a location that met the current standard over the entire study period but that would have violated a revised standard with a level of 70 ppb,[151] she further judges that they are of more limited utility for distinguishing between the appropriateness of the health protection estimated for a standard level of 70 ppb and the protection estimated for lower levels. Thus, the Administrator notes that a revised standard with a level of 70 ppb will provide additional public health protection, beyond that provided by the current standard, against the clearly adverse effects reported in epidemiologic studies. She judges that a standard with a level of 70 ppb strikes an appropriate balance between setting the level to require reductions in the ambient O_3 concentrations associated with statistically significant health effects in epidemiologic studies, while not being more protective than necessary in light of her considerable uncertainty in the extent to which studies clearly show O_3-attributable effects at lower ambient O_3 concentrations. This judgment is consistent with the Administrator's conclusions based on information from controlled human exposure studies, as discussed above.

[151] As discussed above (II.B.2.c.ii and II.B.3), the study by Mar and Koenig (2009) reported positive and statistically significant associations with respiratory emergency department visits in a location that would have met the current standard over the entire study period, but violated a standard with a level of 70 ppb. In addition, air quality analyses in the locations of two additional studies highlighted in sections II.B.2 and II.B.3 (Silverman and Ito, 2010; Strickland et al., 2010) were used in the PA to inform staff conclusions on the adequacy of the current primary O_3 standard. However, they did not provide insight into the appropriateness of standard levels below 75 ppb and, therefore, these analyses were not used to inform conclusions on potential alternative standard levels lower than 75 ppb (U.S. EPA, 2014c, Chapters 3 and 4). See *Mississippi*, 744 F. 3d at 1352-53 (study appropriate for determining causation may not be probative for determining level of a revised standard).

This document is a prepublication version, signed by EPA Administrator, Gina McCarthy on 10/1/2015. We have taken steps to ensure the accuracy of this version, but it is not the official version.

With regard to epidemiology-based risk estimates, the Administrator takes note of the CASAC conclusion that "[a]lthough the estimates for short-term exposure impacts are subject to uncertainty, the data supports a conclusion that there are meaningful reductions in mean premature mortality associated with ozone levels lower than the current standard" (Frey, 2014a, p. 10). While she concludes that epidemiology-based risk analyses provide only limited support for any specific standard level, consistent with CASAC advice the Administrator judges that, compared to the current standard, a revised standard with a level of 70 ppb will result in meaningful reductions in the mortality and respiratory morbidity risk that is associated with short-or long-term ambient O_3 concentrations.

Given all of the evidence and information discussed above, the Administrator judges that a standard with a level of 70 ppb is requisite to protect public health with an adequate margin of safety, and that a level below 70 ppb would be more than "requisite" to protect the public health. In reaching this conclusion, she notes that a decision to set a lower level would place a large amount of emphasis on the potential public health importance of (1) further reducing the occurrence of O_3 exposures of concern, though the exposures about which she is most concerned are estimated to be almost eliminated with a level of 70 ppb, and lower levels would be expected to achieve virtually no additional reductions in these exposures (see Table 1, above); (2) further reducing the risk of O_3-induced lung function decrements $\geq$ 10 and 15%, despite having less confidence in judging the potential adversity of lung function decrements alone and the considerable overlap between risk estimates for various standard levels that make it difficult to distinguish between the risk reductions achieved; (3) further reducing ambient O_3 concentrations, relative to those in locations of epidemiologic studies, though associations have not been reported for air quality that would have met a standard with a level of 70 ppb across all study

This document is a prepublication version, signed by EPA Administrator, Gina McCarthy on 10/1/2015. We have taken steps to ensure the accuracy of this version, but it is not the official version.

locations and over entire study periods, and despite her consequent judgment that air quality analyses in epidemiologic study locations are not informative regarding the additional degree of public health protection that would be afforded by a standard set at a level below 70 ppb; and (4) further reducing epidemiology-based risk estimates, despite the important uncertainties in those estimates. As discussed in this section and in the responses to significant comments above, the Administrator does not agree that it is appropriate to place significant weight on these factors or to use them to support the appropriateness of standard levels below 70 ppb O_3. Compared to an O_3 standard level of 70 ppb, the Administrator concludes that the extent to which lower standard levels could result in further public health improvements becomes notably less certain.

Thus, having carefully considered the evidence, information, CASAC advice, and public comments relevant to her decision on the level of the primary O_3 standard, as discussed above and in the Response to Comments document, the Administrator is revising the level of the primary O_3 standard to 70 ppb. She is mindful that the selection of a primary O_3 standard that is requisite to protect public health with an adequate margin of safety requires judgments based on an interpretation of the scientific evidence and exposure/risk information that neither overstate nor understate the strengths and limitations of that evidence and information and the appropriate inferences to be drawn therefrom. Her decision places the greatest emphasis on the results of controlled human exposure studies and on quantitative analyses based on information from these studies, particularly analyses of O_3 exposures of concern. As in the proposal, and as discussed above, she views the results of the lung function risk assessment, analyses of O_3 air quality in locations of epidemiologic studies, and epidemiology-based quantitative health risk assessments as providing information in support of her decision to revise the current standard, but a more limited basis for selecting a particular standard level among a range of options.

This document is a prepublication version, signed by EPA Administrator, Gina McCarthy on 10/1/2015. We have taken steps to ensure the accuracy of this version, but it is not the official version.

In making her decision to revise the level of the primary O_3 standard to 70 ppb, the Administrator judges that a revised standard with a level of 70 ppb strikes the appropriate balance between limiting the O_3 exposures about which she is most concerned and not going beyond what would be required to effectively limit such exposures. Specifically, the Administrator judges it appropriate to set a standard estimated to eliminate, or almost eliminate, repeated occurrences of exposures of concern for the 70 and 80 ppb benchmarks. She further judges that a lower standard level would not be appropriate given that lower levels would be expected to achieve virtually no additional reductions in repeated occurrences of exposures of concern for these benchmarks. For the 60 ppb benchmark, a level of 70 ppb is estimated to protect the vast majority of children (including children with asthma) in urban study areas from experiencing two or more exposures of concern, reflecting important reductions in such exposures compared to the current standard and indicating that the revised primary O_3 standard provides an adequate margin of safety. Given these results, including the considerable protection provided against repeated exposures of concern for the 60 ppb benchmark, the Administrator judges that a standard with a level of 70 ppb incorporates an adequate margin of safety against the occurrence of adverse O_3-induced effects.

For all of the above reasons, the Administrator concludes that a primary O_3 standard with an 8-hour averaging time; a 3-year average, 4th-high form; and a level of 70 ppb is requisite to protect public health, including the health of at-risk populations, with an adequate margin of safety. Therefore, in this final rule she is setting the level of the primary O_3 standard at 70 ppb.

D. Decision on the Primary Standard

For the reasons discussed above, and taking into account information and assessments presented in the ISA, HREA, and PA, the advice and recommendations of the CASAC Panel,

This document is a prepublication version, signed by EPA Administrator, Gina McCarthy on 10/1/2015. We have taken steps to ensure the accuracy of this version, but it is not the official version.

and the public comments, the Administrator has decided to revise the existing 8-hour primary O_3 standard. Specifically, the Administrator is revising the level of the primary O_3 standard to 70 ppb. The revised 8-hour primary standard, with a level of 70 ppb, would be met at an ambient air monitoring site when the 3-year average of the annual fourth-highest daily maximum 8-hour average O_3 concentration is less than or equal to 70 ppb. Data handling conventions are specified in the new Appendix U that is adopted, as discussed in section V below.

At this time, EPA is also promulgating revisions to the Air Quality Index (AQI) for O_3 to be consistent with the revisions to the primary O_3 standard and the health information evaluated in this review of the standards. These revisions are discussed below in section III.

III. Communication of Public Health Information

Information on the public health implications of ambient concentrations of criteria pollutants is currently made available primarily through EPA's AQI program. The AQI has been in use since its inception in 1999 (64 FR 42530). It provides accurate, timely, and easily understandable information about daily levels of pollution. It is designed to tell individual members of the public how clean or unhealthy their air is, whether health effects might be a

This document is a prepublication version, signed by EPA Administrator, Gina McCarthy on 10/1/2015. We have taken steps to ensure the accuracy of this version, but it is not the official version.

concern, and, if so, measures individuals can take to reduce their exposure to air pollution.[152] See CAA section 127. The AQI focuses on health effects individuals may experience within a few hours or days after breathing unhealthy air. The AQI establishes a nationally uniform system of indexing pollution concentrations for O_3, CO, NO_2, PM and SO_2. The AQI converts pollutant concentrations in a community's air to a number on a scale from 0 to 500. Reported AQI values enable the public to know whether air pollution concentrations in a particular location are characterized as good (0 - 50), moderate (51 - 100), unhealthy for sensitive groups (101 - 150), unhealthy (151 - 200), very unhealthy (201 - 300), or hazardous (301 - 500). The AQI index value of 100 typically corresponds to the level of the short-term NAAQS for each pollutant. For the 2008 O_3 NAAQS, an 8-hour average concentration of 75 ppb corresponds to an AQI value of 100. An AQI value greater than 100 means that a pollutant is in one of the unhealthy categories (i.e., unhealthy for sensitive groups, unhealthy, very unhealthy, or hazardous) on a given day; an AQI value at or below 100 means that a pollutant concentration is in one of the satisfactory

[152] EPA issued the AQI in 1999, updating the previous Pollutant Standards Index (PSI) to send "a clear and consistent message to the public by providing nationally uniform information on air quality." The rule requires metropolitan areas of 350,000 and larger to report the AQI [and associated health effects] daily; all other AQI-related activities -- including real-time ozone and particle pollution reporting, next-day air quality forecasting and action days -- are voluntary and are carried out at the discretion of state, local and tribal air agencies. In the 1999 rule, we acknowledged these other programs, noting, for example, that while states primarily use the AQI "to provide general information to the public about air quality and its relationship to public health," some state, local or tribal agencies use the index to call "action days." Action days encourage additional steps, usually voluntary, that the public, business or industry could take to reduce emissions when higher levels of pollution are forecast to occur. As the 1999 rule notes, agencies may have several motivations for calling action days, including: providing health information to the public; attaining or maintaining NAAQS attainment status; meeting specific emission reduction targets; and managing or reducing traffic congestion. State, local and tribal agencies should consider whether non-voluntary emissions or activity curtailments are necessary (as opposed to a suite of voluntary measures) for days when the AQI is forecasted to be on the lower end of the moderate category.

This document is a prepublication version, signed by EPA Administrator, Gina McCarthy on 10/1/2015. We have taken steps to ensure the accuracy of this version, but it is not the official version.

categories (i.e., moderate or good). An additional consideration in selecting breakpoints is for each category to span at least a 15 ppb range to allow for more accurate air pollution forecasting. Decisions about the pollutant concentrations at which to set the various AQI breakpoints, that delineate the various AQI categories, draw directly from the underlying health information that supports the NAAQS review.

A. Proposed Revisions to the AQI

Recognizing the importance of revising the AQI in a timely manner to be consistent with any revisions to the NAAQS, EPA proposed conforming changes to the AQI, in connection with the Agency's proposed decision on revisions to the O_3 NAAQS. These conforming changes included setting the 100 level of the AQI at the same level as the revised primary O_3 NAAQS and also making adjustments based on health information from this NAAQS review to AQI breakpoints at the lower end of each range (i.e., AQI values of 50, 150, 200 and 300). The EPA did not propose to change the level at the top of the index (i.e., AQI value of 500) that typically is set equal to the Significant Harm Level (40 CFR 51.16), which would apply to state contingency plans.

The EPA proposed to revise the AQI for O_3 by setting an AQI value of 100 equal to the level of the revised O_3 standard (65-70 ppb). The EPA also proposed to revise the following breakpoints: an AQI value of 50 to within a range from 49-54 ppb; an AQI value of 150 to 85 ppb; an AQI value of 200 to 105 ppb, and an AQI value of 300 to 200 ppb. All these levels are averaged over 8 hours. The EPA proposed to set an AQI value of 50, the breakpoint between the good and moderate categories, at 15 ppb below the value of the proposed standard, i.e. to within a range from 49 to 54 ppb. The EPA took comment on what level within this range to select, recognizing that there is no health message for either at-risk or healthy populations in the good

This document is a prepublication version, signed by EPA Administrator, Gina McCarthy on 10/1/2015. We have taken steps to ensure the accuracy of this version, but it is not the official version.

category. Thus, the level selected should be below the lowest concentration (i.e., 60 ppb) that has been shown in controlled human exposure studies of young, healthy adults exposed to O_3 while engaged in quasi-continuous moderate exercise for 6.6 hours to cause moderate lung function decrements (i.e., FEV_1 decrements ≥ 10%, which could be adverse to people with lung disease) and airway inflammation.[153] The EPA proposed to set an AQI value of 150, the breakpoint between the unhealthy for sensitive groups and unhealthy categories, at 85 ppb. At this level, controlled human exposure studies of young, healthy adults indicate that up to 25% of exposed people are likely to have moderate lung function decrements (i.e., 25% have FEV_1 decrements ≥ 10%; 12% have FEV_1 decrements ≥ 15%) and up to 7% are likely to have large lung function decrements (i.e., FEV_1 decrements ≥ 20%) (McDonnell et al., 2012; Figure 7). Large lung function decrements would likely interfere with normal activity for many healthy people. For most people with lung disease, large lung function decrements would not only interfere with normal activity but would increase the likelihood that they would seek medical treatment (72 FR 37850, July 11, 2007). The EPA proposed to set an AQI value of 200, the breakpoint between the unhealthy and very unhealthy categories, at 105 ppb. At this level, controlled human exposure studies of young, healthy adults indicate that up to 38% of exposed people are likely to have moderate lung function decrements (i.e., 38% have FEV_1 decrements ≥ 10%; 22% have FEV_1 decrements ≥ 15%) and up to 13% are likely to have large lung function decrements (i.e., FEV_1 decrements ≥ 20%). The EPA proposed to set an AQI value of 300, the breakpoint between the very unhealthy and hazardous categories, at 200 ppb. At this level, controlled human

[153] Exposures to 50 ppb have not been evaluated experimentally, but are estimated to potentially affect only a small proportion of healthy adults and with only a half to a third of the moderate to large lung function decrements observed at 60 ppb (McDonnell et al., 2012; Figure 7).

This document is a prepublication version, signed by EPA Administrator, Gina McCarthy on 10/1/2015. We have taken steps to ensure the accuracy of this version, but it is not the official version.

exposure studies of healthy adults indicate that up to 25% of exposed individuals are likely to have large lung function decrements (i.e., FEV_1 decrements ≥ 20%), which would interfere with daily activities for many of them and likely cause people with lung disease to seek medical attention.

EPA stated that the proposed breakpoints reflect an appropriate balance between reflecting the health evidence that is the basis for the proposed primary O_3 standard and providing category ranges that are large enough to be forecasted accurately, so that the new AQI for O_3 can be implemented more easily in the public forum for which the AQI ultimately exists. However, the EPA recognized alternative approaches to viewing the evidence and information and solicited comment on the proposed revisions to the AQI.

With respect to reporting requirements (40 CFR Part 58, section 58.50), EPA proposed to revise 40 CFR Part 58, section 58.50 (c) to determine the areas subject to AQI reporting requirements based on the latest available census figures, rather than the most recent decennial U.S. census.[154] This change is consistent with our current practice of using the latest population figures to make monitoring requirements more responsive to changes in population.

B. Comments on Proposed Revisions to the AQI

EPA received many comments on the proposed changes to the AQI. Three issues came up in the comments, including: (1) whether the AQI should be revised at all, even if the primary standard is revised; (2) whether an AQI value of 100 should be set equal to the level of the primary standard and the other breakpoints adjusted accordingly; and, (3) whether the AQI reporting requirements should be based on the latest available census figures rather than the most

[154] Under 40 CFR 58.50, any MSA with a population exceeding 350,000 is required to report AQI data.

This document is a prepublication version, signed by EPA Administrator, Gina McCarthy on 10/1/2015. We have taken steps to ensure the accuracy of this version, but it is not the official version.

recent decennial census.

With respect to the first issue, some industry commenters stated that the AQI should not be revised at all, even if the level of the primary O_3 standard is revised. In support of this position, these commenters stated that the proposed conforming changes to the AQI would lower O_3 levels in each category, and would mean that air quality that is actually improving would be reported as less healthy. According to commenters, the revised AQI would fail to capture these improvements and potentially mislead the public into thinking that air quality has degraded and that EPA and state regulators are not doing their jobs. These commenters noted that there is no requirement to revise the AQI, and that the CAA does not tie the AQI to the standards, stating that the purpose of section 319(a) of the CAA is to provide a consistent, uniform means of gauging air quality. These commenters further asserted that EPA's proposed changes run counter to that uniformity by changing the air quality significance of a given index value and category and that retention of the current AQI breakpoints would allow continued uniform information on air quality. Commenters stated that it is important that the EPA clearly communicates that the immediate increases in moderate rated days are due to AQI breakpoint adjustment and not due to a sudden decline in air quality. One commenter estimated the increased proportion of days in the moderate category and above in 10 metropolitan areas for 2013 and also for 2025 for 4 cities from the original 10 that were estimated to attain a standard below 70 ppb, to compare with 2013. This commenter noted that the change in the proposed AQI breakpoint between "good" and "moderate" would result in a larger number of days that did not meet the "good" criteria. They went further to claim that the change in breakpoints would result in fewer "good" days in the year 2025 (using the new breakpoint) than occurred in 2013 (using the old breakpoints) despite substantial improvement in air quality over that time period.

This document is a prepublication version, signed by EPA Administrator, Gina McCarthy on 10/1/2015. We have taken steps to ensure the accuracy of this version, but it is not the official version.

On the other hand, state and local agencies and their organizations, environmental and medical groups, and members of the public overwhelmingly supported revising the AQI when the level of the standard is revised. Even state agencies that did not support revising the standard, expressed support for revising the AQI at the same time as the standard, if the standard is revised.

Recognizing the importance of the AQI as a communication tool that allows members of the public to take exposure reduction measures when air quality poses health risks, the EPA agrees with these comments about revising the AQI at the same time as the primary standard. The EPA agrees with state and local agency commenters that its historical approach of setting an AQI value of 100 equal to the level of the revised 8-hour primary O_3 standard is appropriate, both from a public health and a communication perspective.

EPA disagrees with commenters who stated that the AQI should not be linked to the primary standards. As noted in the August 4, 1999, rulemaking (64 FR 149, 42531) that established the current AQI, the EPA established the nationally uniform air quality index, called the Pollutant Standards Index (PSI), in 1976 to meet the needs of state and local agencies with the following advantages: it sends a clear and consistent message to the public by providing nationally uniform information on air quality; it is keyed as appropriate to the NAAQS and the Significant Harm Level which have a scientific basis relating air quality and public health; it is simple and easily understood by the public; it provides a framework for reflecting changes to the NAAQS; and it can be forecasted to provide advance information on air quality. Both the PSI and AQI have historically been normalized across pollutants by defining an index value of 100 as the numerical level of the short-term (i.e., averaging time of 24-hours or less) primary NAAQS for each pollutant. Moreover, this approach does not mislead the public. Since the

This document is a prepublication version, signed by EPA Administrator, Gina McCarthy on 10/1/2015. We have taken steps to ensure the accuracy of this version, but it is not the official version.

establishment of the AQI, the EPA and state and local air agencies and organizations have developed experience in educating the public about changes in the standards and, concurrently, related changes to AQI breakpoints and advisories. When the standards change, EPA and state and local agencies have tried to help the public understand that air quality is not getting worse, it's that the health evidence underlying the standards and the AQI has changed. EPA's Air Quality System (AQS), the primary repository for air quality monitoring data, is also adjusted to reflect the revised breakpoints. Specifically, all historical AQI values in AQS are recomputed with the revised breakpoints, so that all data queries and reports downstream of AQS will show appropriate trends in AQI values over time.[155]

In general, commenters who supported revising the AQI when the standard is revised, also supported setting an AQI value of 100 equal to the level of the 8-hour primary O_3 standard. The EPA agrees with these commenters. With respect to an AQI value of 100, the EPA is taking final action to set an AQI value of 100 equal to the level of the 8-hour primary standard at 70 ppb O_3.

With respect to proposed changes to other AQI breakpoints, some state and local agency commenters expressed general support for all the changes in O_3 breakpoints (in Table 2 of Appendix G). In addition, we received a few comments specifically about the breakpoint between the good and moderate categories. One state expressed the view that forecasting the

[155] Although we do not contest the assertion that the new AQI breakpoints will lead to fewer green days in the near future, we do not agree that commenters' analysis sufficiently demonstrates that there would be fewer green days in 2025 than in 2013. In their analysis, they compared observed 2013 data with modeled 2025 data without doing any model performance evaluation for AQI categories or comparison of current year modeled and observed data. The current year observations are not directly comparable to the future-year modeling data without some such evaluation and, as such, we cannot support their quantitative conclusions.

This document is a prepublication version, signed by EPA Administrator, Gina McCarthy on 10/1/2015. We have taken steps to ensure the accuracy of this version, but it is not the official version.

AQI for O_3 is not an exact science, so it is important to provide a range large enough to reasonably predict O_3 concentrations for the following day (≥ 20 ppb). Although not supporting revision of the standard, this state recommended that if the primary standard was revised to 70 ppb, the lower end of moderate category should be set at 50 ppb to allow for a 20 ppb spread in that category. Several commenters recommending a breakpoint between the good and moderate categories of no higher than 50 ppb stated that this breakpoint should be set on health information, pointing to epidemiologic data and the World Health organization guidelines. The Agency agrees that AQI breakpoints should take into consideration health information when possible, and also that it is important for AQI categories to span ranges large enough to support accurate forecasting. The EPA is setting the breakpoint at the lower end of the moderate category at 55 ppb, which is 15 ppb below the level of the standard of 70 ppb. This is consistent with past practice of making a proportional adjustment to this AQI breakpoint, relative to an AQI value of 100 (i.e., 70 ppb), and also retains the current practice of providing a 15 ppb range in the moderate category to allow for accurate forecasting. This level is below the lowest concentration (i.e., 60 ppb) that has been shown in controlled human exposure studies of healthy adults to cause moderate lung function decrements (i.e., FEV_1 decrements ≥ 10%, which could be adverse to people with lung disease), large lung function decrements (i.e., FEV_1 decrements ≥ 20%) in a small proportion of people, and airway inflammation, notwithstanding the Administrator's judgment that there is uncertainty in the adversity of the effects shown to occur at 60 ppb.

We received fewer comments on proposed changes to the AQI values of 150, 200 and 300. Again, some state and local agency commenters expressed general support for proposed changes to the AQI. Some states specifically supported these breakpoints. However, a commenter suggested setting an AQI value at the lower end of the unhealthy category, at a level

This document is a prepublication version, signed by EPA Administrator, Gina McCarthy on 10/1/2015. We have taken steps to ensure the accuracy of this version, but it is not the official version.

much lower than 85 ppb, since they state that it is a key threshold that is often used in air quality action day programs as a trigger to encourage specific behavior modifications or reduce emissions of O_3 precursors (e.g., by taking public transportation to work). This commenter stated that setting the breakpoint at 85 ppb would, in the Agency's own rationale, not require the triggering of these pollution reduction measures until air quality threatened to impact 25% of people exposed. We disagree with this commenter because EPA does not have any requirements for voluntary programs. State and local air agencies have discretion to set the trigger for voluntary action programs at whatever level they choose, and they are currently set at different levels, not just at the unhealthy breakpoint specified in the comment. For example, Houston, Galveston and Brazoria TX metropolitan area calls ozone action days when air quality reaches the unhealthy for sensitive groups category. For more information about action days programs across the U.S. see the AirNow website (www.airnow.gov) and click on the link to AirNow Action Days. The unhealthy category represents air quality where there are general population-level effects. We believe that setting the breakpoint between the unhealthy for sensitive groups and unhealthy categories, at 85 ppb where, as discussed in section IIIA above, controlled human exposure studies of young, healthy adults exposed to O_3 while engaged in quasi-continuous moderate exercise for 6.6 hours indicate that up to 25% of exposed people are likely to have moderate lung function decrements and up to 7% are likely to have large lung function decrements (McDonnell et al., 2012; Figure 7) is appropriate. A smaller proportion of inactive or less active individuals would be expected to experience lung function decrements at 85 ppb. Moreover, a breakpoint at 85 ppb allows for category ranges large enough for accurate forecasting. Accordingly, the EPA is adopting the proposed revisions to the AQI values of 150, 200 and 300.

This document is a prepublication version, signed by EPA Administrator, Gina McCarthy on 10/1/2015. We have taken steps to ensure the accuracy of this version, but it is not the official version.

As noted earlier, the EPA proposed to revise 40 CFR Part 58, section 58.50 (c) to determine the areas subject to AQI reporting requirements based on the latest available census figures, rather than the most recent decennial U.S. census.

A total of five state air monitoring agencies provided comments on this proposed change. Four agencies supported the proposal. One state commenter did not support the proposal, noting that the change would unnecessarily complicate AQI reporting and possibly increase reporting burdens in an unpredictable manner.

The EPA notes that the majority of monitoring network minimum requirements listed in Appendix D to Part 58 include a reference to "latest available census figures." Minimum network requirements for O_3, $PM_{2.5}$, SO_2, and NO_2 all include this language in the regulatory text and monitoring agencies have successfully adopted these processes into their planning activities and the subsequent revision of their annual monitoring network plans which are posted for public review. Annual population estimates are easily obtainable from the U.S. Census Bureau and the EPA does not believe the burden in tracking these annual estimates is excessive or complicated.[156] Although the changes in year to year estimates are typically modest, there are MSAs that are approaching (or have recently exceeded) the 350,000 population AQI reporting limit and there is great value in having the AQI reported for these areas when the population threshold is exceeded versus waiting potentially up to 10 years for a revision to the decennial census. Accordingly, the EPA is finalizing the proposed revision to 40 CFR Part 58, section 58.50 (c) to require the AQI reporting requirements to be based on the latest available census figures.

[156] http://www.census.gov/popest/data/metro/totals/2014/CBSA-EST2014-alldata.html.

This document is a prepublication version, signed by EPA Administrator, Gina McCarthy on 10/1/2015. We have taken steps to ensure the accuracy of this version, but it is not the official version.

One state requested additional guidance on the frequency of updating the AQI reporting threshold, and recommended linking the AQI reporting requirement evaluation with the annual air monitoring network plan requirements, and recommended requiring AQI reporting to begin no later than January 1 of the following year. The EPA notes that the census bureau estimates appear to be released around July 1 of each year which would not provide sufficient time for monitoring agencies to incorporate AQI reporting in their annual plans for that year, which are also due by July 1 each year. EPA believes that it should be unnecessary for monitoring agencies to wait until the implementation of the following year's annual plan (i.e., approximately 18 months later) to begin AQI reporting. Accordingly, EPA is not at this time including a specific deadline for commencement of AQI reporting for newly-subject areas in 40 CFR part 58, but will work with agencies to implement additional AQI reporting as needed to ensure that information is being disseminated in a timely fashion.

C. Final Revisions to the AQI

For the reasons discussed above, the EPA is revising the AQI for O_3 by setting an AQI value of 100 equal to 70 ppb, 8-hour average, the level of the revised primary O_3 standard. The EPA is also revising the following breakpoints: An AQI value of 50 is set at 54 ppb; an AQI value of 150 is set at 85 ppb; an AQI value of 200 is set at 105 ppb; and an AQI value of 300 is set at 200 ppb. All of these levels are averaged over 8 hours. The revisions to all of the breakpoints are based on estimated health outcomes at relevant ambient concentrations and to allow for each category to span at least a 15-20 ppb category range to allow for more accurate air pollution forecasting. The EPA believes that the revised breakpoints provide a balance between adjustments to reflect the health information supporting the revised O_3 standard and providing category ranges that are large enough to be forecasted accurately, so that the AQI can be

This document is a prepublication version, signed by EPA Administrator, Gina McCarthy on 10/1/2015. We have taken steps to ensure the accuracy of this version, but it is not the official version.

implemented more easily in the public forum for which the AQI ultimately exists. With respect to AQI reporting requirements (40 CFR part 58, section 58.50), the EPA is revising 40 CFR part 58, section 58.50 (c) to make the AQI reporting requirements based on the latest available census figures, rather than the most recent decennial U.S. census. This change is consistent with our current practice of using the latest population figures to make monitoring requirements more responsive to changes in population.

IV. Rationale for Decision on the Secondary Standard

A. Introduction

This section (IV) presents the rationale for the Administrator's decisions regarding the need to revise the current secondary standard for O_3, and the appropriate revision. Based on her consideration of the full body of welfare effects evidence and related analyses, including the evidence of effects associated with cumulative seasonal exposures of the magnitudes allowed by the current standard, the Administrator has concluded that the current secondary standard for O_3 does not provide the requisite protection of public welfare from known or anticipated adverse effects. She has decided to revise the level of the current secondary standard to 0.070 ppm, in conjunction with retaining the current indicator, averaging time and form.

The Administrator has made this decision based on judgments regarding the currently available welfare effects evidence, the appropriate degree of public welfare protection for the revised standard, and currently available air quality information on seasonal cumulative exposures that may be allowed by such a standard. In so doing, she has focused on O_3 effects on tree seedling growth as a proxy for the full array of vegetation-related effects of O_3, ranging from effects on sensitive species to broader ecosystem-level effects. Using this proxy in judging effects to public welfare, the Administrator has concluded that the requisite protection from

This document is a prepublication version, signed by EPA Administrator, Gina McCarthy on 10/1/2015. We have taken steps to ensure the accuracy of this version, but it is not the official version.

adverse effects to public welfare will be provided by a standard that limits cumulative seasonal exposures to 17 ppm-hrs or lower, in terms of a 3-year W126 index, in nearly all instances, and she has also concluded that such control of cumulative seasonal exposures may be achieved by revising the level of the current standard to 70 ppb. Based on all of these considerations, the Administrator has decided that a secondary standard with a level of 0.070 ppm, and the current form and averaging time, will provide the requisite protection of public welfare from known or anticipated adverse effects.

As discussed more fully below, this decision is based on a thorough review, in the ISA, of the latest scientific information on O_3-induced environmental effects. This decision also takes into account (1) staff assessments in the PA of the most policy-relevant information in the ISA regarding evidence of adverse effects of O_3 to vegetation and ecosystems, information on biologically-relevant exposure metrics, WREA analyses of air quality, exposure, and ecological risks and associated ecosystem services, and staff analyses of relationships between levels of a W126-based metric and a metric based on the form and averaging time of the current standard summarized in the PA and in the proposal notice; (2) CASAC advice and recommendations; and (3) public comments received during the development of these documents, either in connection with CASAC meetings or separately, and on the proposal notice.

This decision draws on the ISA's integrative synthesis of the entire body of evidence, generally published through July 2011, on environmental effects associated with the presence of O_3 and related photochemical oxidants in the ambient air (U.S. EPA, 2013, ISA chapters 9-10), and includes more than four hundred new studies that build on the extensive evidence base from the last review. In addition to reviewing the most recent scientific information as required by the CAA, this rulemaking incorporates the EPA's response to the judicial remand of the 2008

This document is a prepublication version, signed by EPA Administrator, Gina McCarthy on 10/1/2015. We have taken steps to ensure the accuracy of this version, but it is not the official version.

secondary O_3 standard in *State of Mississippi v. EPA*, 744 F. 3d 1334 (D.C. Cir. 2013) and, in accordance with the court's decision in that case, fully explains the Administrator's conclusions as to the level of air quality that provides the requisite protection of public welfare from known or anticipated adverse effects. In drawing conclusions on the secondary standard, the decision described in this rulemaking is a public welfare policy judgment made by the Administrator. The Administrator's decision draws upon the available scientific evidence for O_3-attributable welfare effects and on analyses of exposures and public welfare risks based on impacts to vegetation, ecosystems and their associated services, as well as judgments about the appropriate weight to place on the range of uncertainties inherent in the evidence and analyses. As described in sections IV.B.3 and IV.C.3 below, such judgments in the context of this review include judgments on the weight to place on the evidence of specific vegetation-related effects estimated to result across a range of cumulative seasonal concentration-weighted O_3 exposures; on the weight to give associated uncertainties, including those related to the variability in occurrence of such effects in areas of the U.S., especially areas of particular public welfare significance; and on the extent to which such effects in such areas may be considered adverse to public welfare.

Information related to vegetation and ecosystem effects, biologically relevant exposure indices, and vegetation exposure and risk assessments were summarized in sections IV.A through IV.C of the proposal (79 FR at 75314-75329), respectively, and key observations from the proposal are briefly outlined in sections IV.A.1 to IV.A.3 below. Subsequent sections of this preamble provide a more complete discussion of the Administrator's rationale, in light of key issues raised in public comments, for concluding that the current standard is not requisite to protect public welfare from known or anticipated adverse effects (section IV.B), and that it is appropriate to revise the current secondary standard to provide additional public welfare

This document is a prepublication version, signed by EPA Administrator, Gina McCarthy on 10/1/2015. We have taken steps to ensure the accuracy of this version, but it is not the official version.

protection by revising the level while retaining the current indicator, form and averaging time (section IV.C). A summary of the final decisions on revisions to the secondary standard is presented in section IV.D.

1. Overview of Welfare Effects Evidence

a. Nature of Effects

In the more than fifty years that have followed identification of O_3's phytotoxic effects, extensive research has been conducted both in and outside of the U.S. to examine the impacts of O_3 on plants and their associated ecosystems (U.S. EPA, 1978, 1986, 1996a, 2006a, 2013). As was established in prior reviews, O_3 can interfere with carbon gain (photosynthesis) and allocation of carbon within the plant, making fewer carbohydrates available for plant growth, reproduction, and/or yield. For seed-bearing plants, these reproductive effects will culminate in reduced seed production or yield (U.S. EPA, 1996a, pp. 5-28 and 5-29). Recent studies, assessed in the ISA, together with this longstanding and well-established literature on O_3-related vegetation effects, further contribute to the coherence and consistency of the vegetation effects evidence (U.S. EPA, 2013, chapter 9).

The strongest evidence for effects from O_3 exposure on vegetation is from controlled exposure studies, which "have clearly shown that exposure to O_3 is causally linked to visible foliar injury, decreased photosynthesis, changes in reproduction, and decreased growth" in many species of vegetation (U.S. EPA, 2013, p. 1-15). Such effects at the plant scale can also be linked to an array of effects at larger spatial scales, with the currently available evidence indicating that "ambient O_3 exposures can affect ecosystem productivity, crop yield, water cycling, and ecosystem community composition" (U.S. EPA, 2013, p. 1-15; Chapter 9, section 9.4). The current body of O_3 welfare effects evidence confirms and strengthens support for the conclusions

This document is a prepublication version, signed by EPA Administrator, Gina McCarthy on 10/1/2015. We have taken steps to ensure the accuracy of this version, but it is not the official version.

reached in the last review on the nature of O_3-induced welfare effects and is summarized in the ISA as follows (U.S. EPA, 2013, p. 1-8).

> The welfare effects of O_3 can be observed across spatial scales, starting at the subcellular and cellular level, then the whole plant and finally, ecosystem-level processes. Ozone effects at small spatial scales, such as the leaf of an individual plant, can result in effects along a continuum of larger spatial scales. These effects include altered rates of leaf gas exchange, growth, and reproduction at the individual plant level, and can result in broad changes in ecosystems, such as productivity, carbon storage, water cycling, nutrient cycling, and community composition.

Based on assessment of this extensive body of science, the EPA has determined that, with respect to vegetation and ecosystems, a causal relationship exists between exposure to O_3 in ambient air and visible foliar injury effects on vegetation, reduced vegetation growth, reduced productivity in terrestrial ecosystems, reduced yield and quality of agricultural crops and alteration of below-ground biogeochemical cycles (U.S. EPA, 2013, Table 1-2). In consideration of the evidence of O_3 exposure and alterations in stomatal performance, "which may affect plant and stand transpiration and therefore possibly affecting hydrological cycling," the ISA concludes that "[a]lthough the direction of the response differed among studies," the evidence is sufficient to conclude a likely causal relationship between O_3 exposure and the alteration of ecosystem water cycling (U.S. EPA, 2013, section 2.6.3). The evidence is also sufficient to conclude a likely causal relationship between O_3 exposure and the alteration of community composition of some terrestrial ecosystems (U.S. EPA, 2013, section 2.6.5). Related to the effects on vegetation growth, productivity and, to some extent, below-ground biogeochemical cycles, the EPA has additionally determined that a likely causal relationship exists between exposures to O_3 in ambient air and reduced carbon sequestration (also termed carbon storage) in terrestrial ecosystems (U.S. EPA, 2013, p. 1-10 and section 2.6.2). Modeling studies available in this

This document is a prepublication version, signed by EPA Administrator, Gina McCarthy on 10/1/2015. We have taken steps to ensure the accuracy of this version, but it is not the official version.

review consistently found negative impacts of O_3 on carbon sequestration, although the severity of impact was influenced by "multiple interactions of biological and environmental factors" (U.S. EPA, 2013, p. 2-39).

Ozone in the troposphere is also a major greenhouse gas and radiative forcing agent,[157] with the ISA formally concluding that "the evidence supports a causal relationship between changes in tropospheric O_3 concentrations and radiative forcing" (U.S. EPA, 2013, p. 1-13 and section 2.7.1). While tropospheric O_3 has been ranked third in importance after carbon dioxide and methane, there are "large uncertainties in the magnitude of the radiative forcing estimate attributed to tropospheric O_3, making the impact of tropospheric O_3 on climate more uncertain than the effect of the longer-lived greenhouse gases" (U.S. EPA, 2013, p. 2-47). The ISA notes that "[e]ven with these uncertainties, global climate models indicate that tropospheric O_3 has contributed to observed changes in global mean and regional surface temperatures" and concludes that "[a]s a result of such evidence presented in climate modeling studies, there is likely to be a causal relationship between changes in tropospheric O_3 concentrations and effects on climate" (U.S. EPA, 2013, p. 2-47).[158] The ISA additionally states that "[i]mportant uncertainties remain regarding the effect of tropospheric O_3 on future climate change" (U.S. EPA, 2013, p. 10-31).

b. Vegetation Effects

[157] As described in the ISA, "[r]adiative forcing by a greenhouse gas or aerosol is a metric used to quantify the change in balance between radiation coming into and going out of the atmosphere caused by the presence of that substance" (U.S. EPA, 2013a, p. 1-13).

[158] Climate responses, including increased surface temperature, have downstream climate-related ecosystem effects (U.S. EPA, 2013, p. 10-7). As noted in section I.D above, such effects may include an increase in the area burned by wildfires, which, in turn, are sources of O_3 precursor emissions.

This document is a prepublication version, signed by EPA Administrator, Gina McCarthy on 10/1/2015. We have taken steps to ensure the accuracy of this version, but it is not the official version.

Given the strong evidence base and the findings of causal or likely causal relationships with O_3 in ambient air, including the quantitative assessments of relationships between O_3 exposure and occurrence and magnitude of effects, this review has given primary consideration to three main kinds of vegetation effects, some of which contribute to effects at scales beyond the plant level, such as at the ecosystem level and on ecosystem services. The three kinds of effects are addressed below in the following order: 1) visible foliar injury, 2) impacts on tree growth, productivity and carbon storage, and 3) crop yield loss.

Visible foliar injury resulting from exposure to O_3 has been well characterized and documented over several decades of research on many tree, shrub, herbaceous, and crop species (U.S. EPA, 2013, p. 1-10; U.S. EPA, 2006a, 1996a, 1986, 1978). Ozone-induced visible foliar injury symptoms on certain plant species, such as black cherry, yellow-poplar and common milkweed, are considered diagnostic of exposure to O_3 based on the consistent association established with experimental evidence (U.S. EPA, 2013, p. 1-10). The evidence has found that visible foliar injury occurs only when sensitive plants are exposed to elevated O_3 concentrations in a predisposing environment; a major modifying factor is the amount of available soil moisture during the year (U.S. EPA, 2013, section 9.4.2).

The significance of O_3 injury at the leaf and whole plant levels depends on an array of factors, and therefore, it is difficult to quantitatively relate visible foliar injury symptoms to vegetation effects such as individual tree growth, or effects at population or ecosystem levels (U.S. EPA, 2013, p. 9-39). The ISA notes that visible foliar injury "is not always a reliable indicator of other negative effects on vegetation" (U.S. EPA, 2013, p. 9-39). Factors that influence the significance to the leaf and whole plant include the amount of total leaf area affected, age of plant, size, developmental stage, and degree of functional redundancy among the

This document is a prepublication version, signed by EPA Administrator, Gina McCarthy on 10/1/2015. We have taken steps to ensure the accuracy of this version, but it is not the official version.

existing leaf area (U.S. EPA, 2013, section 9.4.2). Although there remains a lack of robust exposure-response functions that would allow prediction of visible foliar injury severity and incidence under varying air quality and environmental conditions, "[e]xperimental evidence has clearly established a consistent association of visible injury with O_3 exposure, with greater exposure often resulting in greater and more prevalent injury" (U.S. EPA, 2013, section 9.4.2, p. 9-41).

By far the most extensive field-based dataset of visible foliar injury incidence is that obtained by the U.S. Forest Service Forest Health Monitoring/Forest Inventory and Analysis (USFS FHM/FIA) biomonitoring network program (U.S. EPA, 2013, section 9.4.2.1; Smith, 2012; Coulston et al., 2007). A recently published trend analysis of data from the sites located in 24 states of the northeast and north central U.S. for the 16-year period from 1994 through 2009 (Smith, 2012) describes evidence of visible foliar injury occurrence in the field as well as some insight into the influence of changes in air quality and soil moisture on visible foliar injury and the difficulty inherent in predicting foliar injury response under different air quality and soil moisture scenarios (Smith, 2012; U.S. EPA, 2013, section 9.4.2.1). Study results showed that incidence and severity of foliar injury were dependent on local site conditions for soil moisture availability and O_3 exposure (U.S. EPA, 2013, p. 9-41). Although the study indicated that moderate O_3 exposures continued to cause visible foliar injury at sites throughout the study area, there was an overall declining trend in the incidence of visible foliar injury as peak O_3 concentrations declined (U.S. EPA, 2013, p. 9-40).

Ozone has been shown to affect a number of important U.S. tree species with respect to growth, productivity, and carbon storage. Ambient O_3 concentrations have long been known to cause decreases in photosynthetic rates and plant growth. As discussed in the ISA, research

This document is a prepublication version, signed by EPA Administrator, Gina McCarthy on 10/1/2015. We have taken steps to ensure the accuracy of this version, but it is not the official version.

published since the 2006 AQCD substantiates prior conclusions regarding O_3-related effects on forest tree growth, productivity and carbon storage, and further strengthens the support for those conclusions. A variety of factors in natural environments can either mitigate or exacerbate predicted O_3-plant interactions and are recognized sources of uncertainty and variability. Such factors include multiple genetically influenced determinants of O_3 sensitivity, changing sensitivity to O_3 across vegetative growth stages, co-occurring stressors and/or modifying environmental factors (U.S. EPA, 2013, section 9.4.8). In considering of the available evidence, the ISA states, "previous O_3 AQCDs concluded that there is strong evidence that exposure to O_3 decreases photosynthesis and growth in numerous plant species" and that "[s]tudies published since the 2008 review support those conclusions" (U.S. EPA, 2013, p. 9-42). The available studies come from a variety of different study types that cover an array of different species, effects endpoints, levels of biological organization and exposure methods and durations. The O_3-induced effects at the scale of the whole plant may translate to the ecosystem scale, with changes in productivity and carbon storage. As stated in the ISA, "[s]tudies conducted during the past four decades have demonstrated unequivocally that O_3 alters biomass allocation and plant reproduction" (U.S. EPA, 2013, p. 1-10).

The strong evidence of O_3 impacts on trees includes robust exposure-response (E-R) functions for reduced growth, termed relative biomass loss (RBL),[159] in seedlings of 11 species. These functions were developed under the National Health and Environmental Effects Research Laboratory-Western Ecology Division program, a series of experiments that used open top chambers (OTCs) to investigate seedling growth response for a single growing season under a

[159] These functions for RBL estimate reduction in a year's growth as a percentage of that expected in the absence of O_3 (U.S. EPA, 2013a, section 9.6.2; U.S. EPA, 2014b, section 6.2).

This document is a prepublication version, signed by EPA Administrator, Gina McCarthy on 10/1/2015. We have taken steps to ensure the accuracy of this version, but it is not the official version.

variety of O_3 exposures (ranging from near background to well above current ambient concentrations) and growing conditions (U.S. EPA, 2013, section 9.6.2; Lee and Hogsett, 1996). The evidence from these studies shows that there is a wide range in sensitivity across the studied species in the seedling growth stage over the course of a single growing season, with some species being extremely sensitive and others being very insensitive over the range of cumulative O_3 exposures studied (U.S. EPA, 2014c, Figure 5-1). At the other end of the organizational spectrum, field-based studies of species growing in natural stands have compared observed plant responses across a number of different sites and/or years when exposed to varying ambient O_3 exposure conditions. For example, a study conducted in forest stands in the southern Appalachian Mountains during a period when O_3 concentrations exceeded the current standard found that the cumulative effects of O_3 decreased seasonal stem growth (measured as a change in circumference) by 30-50 percent for most of the examined tree species (i.e., tulip poplar, black cherry, red maple, sugar maple) in a high-O_3 year in comparison to a low-O_3 year (U.S. EPA, 2013, section 9.4.3.1; McLaughlin et al., 2007a). The study also reported that high ambient O_3 concentrations can increase whole-tree water use and in turn reduce late-season streamflow (McLaughlin et al., 2007b; U.S. EPA, 2013, p. 9-43).

The magnitude of O_3 impact on ecosystem productivity and on forest composition can vary among plant communities based on several factors, including the type of stand or community in which the sensitive species occurs (e.g., single species *versus* mixed canopy), the role or position of the species in the stand (e.g., dominant, sub-dominant, canopy, understory), and the sensitivity of co-occurring species and environmental factors (e.g., drought and other factors). For example, recent studies found O_3 to have little impact on white fir, but to greatly reduce growth of ponderosa pine in southern California locations, with associated reductions in

This document is a prepublication version, signed by EPA Administrator, Gina McCarthy on 10/1/2015. We have taken steps to ensure the accuracy of this version, but it is not the official version.

ponderosa pine abundance in the community, and to cause decreased net primary production of most forest types in the mid-Atlantic region, with only small impacts on spruce-fir forest (U.S. EPA, 2013, section 9.4.3.4).

There is previously and newly available evidence of the potential for O_3 to alter biomass allocation and plant reproduction in seasons subsequent to exposure (U.S. EPA, 2013, section 9.4.3). For example, several studies published since the 2006 AQCD further demonstrate that O_3 can alter the timing of flowering and the number of flowers, fruits and seeds in herbaceous and woody plant species (U.S. EPA, 2013, section 9.4.3.3). Further, limited evidence in previous reviews reported that vegetation effects from a single year of exposure to elevated O_3 could be observed in the following year. For example, growth affected by a reduction in carbohydrate storage in one year may result in the limitation of growth in the following year. **S**uch "carry-over" effects have been documented in the growth of some tree seedlings and in roots (U.S. EPA, 2013, section 9.4.8; Andersen, et al., 1997). In the current review, additional field-based evidence expands the EPA's understanding of the consequences of single and multi-year O_3 exposures in subsequent years.

A number of studies were conducted at a planted forest at the Aspen free-air carbon-dioxide and ozone enrichment (FACE) experiment site in Wisconsin. These studies, which occurred in a field setting (more similar to natural forest stands than OTC studies), observed tree growth responses when grown in single or two species stands within 30-m diameter rings and exposed over a period of ten years to existing ambient conditions and elevated O_3 concentrations. Some studies indicate the potential for carry-over effects, such as those showing that the effects of O_3 on birch seeds (reduced weight, germination, and starch levels) could lead to a negative impact on species regeneration in subsequent years, and that the O_3-attributable effect of reduced

This document is a prepublication version, signed by EPA Administrator, Gina McCarthy on 10/1/2015. We have taken steps to ensure the accuracy of this version, but it is not the official version.

aspen bud size might have been related to the observed delay in spring leaf development. These effects suggest that elevated O_3 exposures have the potential to alter carbon metabolism of overwintering buds, which may have subsequent effects in the following year (Darbah, et al., 2008, 2007; Riikonen et al., 2008; U.S. EPA, 2013, section 9.4.3). Other studies found that, in addition to affecting tree heights, diameters, and main stem volumes in the aspen community, elevated O_3 over a 7-year study period was reported to increase the rate of conversion from a mixed aspen-birch community to a community dominated by the more tolerant birch, leading the authors to conclude that elevated O_3 may alter intra- and inter-species competition within a forest stand (U.S. EPA, 2013, section 9.4.3; Kubiske et al., 2006; Kubiske et al., 2007). These studies confirm earlier FACE results of aspen growth reductions from exposure to elevated O_3 during the first seven years of stand growth and of cumulative biomass impacts associated with changes in annual production in studied tree communities (U.S. EPA, 2013, section 9.4.3; King et al., 2005).

Robust and well-established E-R functions for RBL are available for 11 tree species: black cherry, Douglas fir, loblolly pine, ponderosa pine, quaking aspen, red alder, red maple, sugar maple, tulip poplar, Virginia pine, and white pine (U.S. EPA, 2013; U.S. EPA, 2014c). While these 11 species represent only a small fraction (0.8 percent) of the total number of native tree species in the contiguous U.S. (1,497), this small subset includes eastern and western species, deciduous and coniferous species, and species that grow in a variety of ecosystems and represent a range of tolerance to O_3 (U.S. EPA, 2013, section 9.6.2; U.S. EPA, 2014b, section 6.2, Figure 6-2, Table 6-1). Supporting the E-R functions for each of these species are studies in OTCs, with most species studied multiple times under a wide range of exposure and/or growing conditions, with separate E-R functions developed for each combination of species, exposure condition and growing condition scenario (U.S. EPA, 2013, section 9.6.1). Based on these

This document is a prepublication version, signed by EPA Administrator, Gina McCarthy on 10/1/2015. We have taken steps to ensure the accuracy of this version, but it is not the official version.

separate E-R functions, species-specific composite E-R functions have been developed and successfully used to predict the biomass loss response from tree seedling species over a range of cumulative exposure conditions (U.S. EPA, 2013, section 9.6.2). These 11 composite functions, as well as the E-R function for eastern cottonwood (derived from a field study in which O_3 and climate conditions were not controlled),[160] are described in the ISA and graphed in the WREA to illustrate the predicted responses of these species over a wide range of cumulative exposures (U.S. EPA, 2014b, section 6.2, Table 6-1 and Figure 6-2; U.S. EPA, 2013, section 9.6.2). For some of these species, the E-R function is based on a single study (e.g., red maple), while for other species there were as many as 11 studies available (e.g., ponderosa pine). In total, the E-R functions developed for these 12 species (the 11 with robust composite E-R functions plus eastern cottonwood) reflect 52 tree seedling studies. A stochastic analysis in the WREA, summarized in section IV.C of the proposal, indicates the potential for within-species variability in these relationships for each species. Consideration of biomass loss estimates in the PA and in discussions below, however, is based on conventional methods and focuses on estimates for the 11 species for which the robust datasets from OTC experiments are available, in consideration of CASAC advice.

The "detrimental effect of O_3 on crop production has been recognized since the 1960s" (U.S. EPA, 2013, p. 1-10, section 9.4.4). On the whole, the newly available evidence supports

[160] The CASAC cautioned the EPA against placing too much emphasis on the eastern cottonwood data. In comments on the draft PA, the CASAC stated that the eastern cottonwood response data from a single study "receive too much emphasis," explaining that these "results are from a gradient study that did not control for ozone and climatic conditions and show extreme sensitivity to ozone compared to other studies" and that "[a]lthough they are important results, they are not as strong as those from other experiments that developed E-R functions based on controlled ozone exposure" (Frey, 2014c, p. 10).

This document is a prepublication version, signed by EPA Administrator, Gina McCarthy on 10/1/2015. We have taken steps to ensure the accuracy of this version, but it is not the official version.

and strengthens previous conclusions that exposure to O_3 reduces growth and yield of crops. The ISA describes average crop yield loss reported across a number of recently published meta-analyses and identifies several new exposure studies that support prior findings for a variety of crops of decreased yield and biomass with increased O_3 exposure (U.S. EPA, 2013, section 9.4.4.1, Table 9-17). Studies have also "linked increasing O_3 concentration to decreased photosynthetic rates and accelerated aging in leaves, which are related to yield" and described effects of O_3 on crop quality, such as nutritive quality of grasses, macro- and micronutrient concentrations in fruits and vegetable crops and cotton fiber quality (U.S. EPA, 2013, p. 1-10, section 9.4.4). The findings of the newly available studies do not change the basic understanding of O_3-related crop yield loss since the last review and little additional information is available in this review on factors that influence associations between O_3 levels and crop yield loss (U.S. EPA, 2013, section 9.4.4.). However, the evidence available in this review continues to support the conclusion that O_3 in ambient air can reduce the yield of major commodity crops in the U.S. Further, the recent evidence increases our confidence in the use of crop E-R functions based on OTC experiments to characterize the quantitative relationship between ambient O_3 concentrations and yield loss (U.S. EPA, 2013, section 9.4.4).

The new evidence has strengthened support for previously established E-R functions for 10 crops (barley, field corn, cotton, kidney bean, lettuce, peanut, potato, grain sorghum, soybean and winter wheat), reducing two important areas of uncertainty, especially for soybean, as summarized in more detail in section IV.A of the proposal. The established E-R functions for relative yield loss (RYL)[161] were developed from OTC-type experiments from the National Crop

[161] These functions for RYL estimate reduction in a year's growth as a percentage of that expected in the absence of O_3 (U.S. EPA, 2013, section 9.6.2; U.S. EPA, 2014b, section 6.2).

This document is a prepublication version, signed by EPA Administrator, Gina McCarthy on 10/1/2015. We have taken steps to ensure the accuracy of this version, but it is not the official version.

Loss Assessment Network (NCLAN) (U.S. EPA, 2013, section 9.6.3; U.S. EPA, 2014b, section 6.2; U.S. EPA, 2014c, Figure 5-4 and section 6.3). With regard to the first area of uncertainty reduced, evaluations in the ISA found that yield loss in soybean from O_3 exposure at the SoyFACE (Soybean Free Air Concentration Enrichment) field experiment was reliably predicted by soybean E-R functions developed from NCLAN data (U.S. EPA, 2013, section 9.6.3.1),[162] demonstrating a robustness of the NCLAN-based E-R functions for predicting relative yield loss from O_3 exposure. A second area of uncertainty that was reduced is that regarding the application of the NCLAN E-R functions to more recent cultivars currently growing in the field. Recent studies, especially those focused on soybean, provide little evidence that crops are becoming more tolerant of O_3 (U.S. EPA, 2006a; U.S. EPA, 2013, sections 9.6.3.1 and 9.6.3.4 and p. 9-59). The ISA comparisons of NCLAN and SoyFACE data referenced above also "confirm that the response of soybean yield to O_3 exposure has not changed in current cultivars" (U.S. EPA, 2013, p. 9-59; section 9.6.3.1). Additionally, a recent assessment of the relationship between soybean yield loss and O_3 in ambient air over the contiguous area of Illinois, Iowa, and Indiana found a relationship that correlates well with previous results from FACE- and OTC-type experiments (U.S. EPA, 2013, section 9.4.4.1).

c. Biologically Relevant Exposure Metric

In assessing biologically based indices of exposure pertinent to O_3 effects on vegetation, the ISA states the following (U.S. EPA, 2013, p. 2-44).

[162] The NCLAN program, which was undertaken in the early to mid-1980s, assessed multiple U.S. crops, locations, and O_3 exposure levels, using consistent methods, to provide the largest, most uniform database on the effects of O_3 on agricultural crop yields (U.S. EPA 1996a; U.S. EPA, 2006a; U.S. EPA, 2013, sections 9.2, 9.4, and 9.6, Frey, 2014c, p. 9). The SoyFACE experiment was a chamberless (or free-air) field-based exposure study conducted in Illinois from 2001 – 2009 (U.S. EPA, 2013, section 9.2.4).

This document is a prepublication version, signed by EPA Administrator, Gina McCarthy on 10/1/2015. We have taken steps to ensure the accuracy of this version, but it is not the official version.

> The main conclusions from the 1996 and 2006 O_3 AQCDs [Air Quality Criteria Documents] regarding indices based on ambient exposure remain valid. These key conclusions can be restated as follows: ozone effects in plants are cumulative; higher O_3 concentrations appear to be more important than lower concentrations in eliciting a response; plant sensitivity to O_3 varies with time of day and plant development stage; [and] quantifying exposure with indices that cumulate hourly O_3 concentrations and preferentially weight the higher concentrations improves the explanatory power of exposure/response models for growth and yield, over using indices based on mean and peak exposure values.

The long-standing body of available evidence upon which these conclusions are based includes a wealth of information on aspects of O_3 exposure that are important in influencing plant response (U.S. EPA, 1996a; U.S. EPA, 2006a; U.S. EPA, 2013). Specifically, a variety of "factors with known or suspected bearing on the exposure-response relationship, including concentration, time of day, respite time, frequency of peak occurrence, plant phenology, predisposition, etc.," have been identified (U.S. EPA, 2013, section 9.5.2). In addition, the importance of the duration of the exposure and the relatively greater importance of higher concentrations over lower concentrations in determining plant response to O_3 have been consistently well documented (U.S. EPA, 2013, section 9.5.3). Based on improved understanding of the biological basis for plant response to O_3 exposure, a large number of "mathematical approaches for summarizing ambient air quality information in biologically meaningful forms for O_3 vegetation effects assessment purposes" have been developed (U.S. EPA, 2013, section 9.5.3), including those that cumulate exposures over some specified period while weighting higher concentrations more than lower (U.S. EPA, 2013, section 9.5.2). As with any summary statistic, these exposure indices retain information on some, but not all, characteristics of the original observations.

Based on extensive review of the published literature on different types of exposure-response metrics, including comparisons between metrics, the EPA has focused on cumulative,

This document is a prepublication version, signed by EPA Administrator, Gina McCarthy on 10/1/2015. We have taken steps to ensure the accuracy of this version, but it is not the official version.

concentration-weighted indices, recognizing them as the most appropriate biologically based metrics to consider in this context (U.S. EPA, 1996a; U.S. EPA, 1996b; U.S. EPA, 2006a; U.S. EPA, 2013). In the last two reviews of the O_3 NAAQS, the EPA concluded that the risk to vegetation comes primarily from cumulative exposures to O_3 over a season or seasons[163] and focused on metrics intended to characterize such exposures: SUM06[164] in the 1997 review (61 FR 65716, December 13, 1996) and W126 in the 2008 review (72 FR 37818, July 11, 2007). Although in both reviews the policy decision was made not to revise the form and averaging time of the secondary standard, the Administrator, in both cases, also concluded, consistent with CASAC advice, that a cumulative, seasonal index was the most biologically relevant way to relate exposure to plant growth response (62 FR 38856, July 18, 1997; 73 FR 16436, March 27, 2008). This approach for characterizing O_3 exposure concentrations that are biologically relevant with regard to potential vegetation effects received strong support from CASAC in the last review and again in this review, including strong support for use of such a metric as the form for the secondary standard (Henderson, 2006, 2008; Samet, 2010; Frey, 2014c).

Alternative methods for characterizing O_3 exposure to predict plant response have, in recent years, included flux models, which some researchers have claimed may "better predict vegetation responses to O_3 than exposure-based approaches" because they estimate the ambient O_3 concentration that actually enters the leaf (i.e., flux or deposition). However, the ISA notes that "[f]lux calculations are data intensive and must be carefully implemented" (U.S. EPA, 2013,

[163] In describing the form as "seasonal," the EPA is referring generally to the growing season of O_3-sensitive vegetation, not to the seasons of the year (i.e., spring, summer, fall, winter).
[164] The SUM06 index is a threshold-based approach described as the sum of all hourly O_3 concentrations greater or equal to 0.06 ppm observed during a specified daily and seasonal time window (U.S. EPA, 2013a, section 9.5.2). The W126 index is a non-threshold approach, described more fully below.

This document is a prepublication version, signed by EPA Administrator, Gina McCarthy on 10/1/2015. We have taken steps to ensure the accuracy of this version, but it is not the official version.

p. 9-114). Further, the ISA states, "[t]his uptake-based approach to quantify the vegetation impact of O_3 requires inclusion of those factors that control the diurnal and seasonal O_3 flux to vegetation (e.g., climate patterns, species and/or vegetation-type factors and site-specific factors)" (U.S. EPA, 2013, p. 9-114). In addition to these data requirements, each species has different amounts of internal detoxification potential that may protect species to differing degrees. The lack of detailed species- and site-specific data required for flux modeling in the U.S. and the lack of understanding of detoxification processes have continued to make this technique less viable for use in vulnerability and risk assessments at the national scale in the U.S. (U.S. EPA, 2013, section 9.5.4).

Therefore, consistent with the ISA conclusions regarding the appropriateness of considering cumulative exposure indices that preferentially weight higher concentrations over lower for predicting O_3 effects of concern based on the well-established conclusions and supporting evidence described above, and in light of continued CASAC support, we continue to focus on cumulative concentration-weighted indices as the most biologically relevant metrics for consideration of O_3 exposures eliciting vegetation-related effects. Quantifying exposure in this way "improves the explanatory power of exposure/response models for growth and yield over using indices based on mean and peak exposure values" (U.S. EPA, 2013, section 2.6.6.1, p. 2-44). In this review, as in the last review, we use the W126-based cumulative, seasonal metric (U.S. EPA, 2013, sections 2.6.6.1 and 9.5.2) for consideration of the effects evidence and in the exposure and risk analyses in the WREA.

This metric, commonly called the W126 index, is a non-threshold approach described as the sigmoidally weighted sum of all hourly O_3 concentrations observed during a specified daily and seasonal time window, where each hourly O_3 concentration is given a weight that increases

This document is a prepublication version, signed by EPA Administrator, Gina McCarthy on 10/1/2015. We have taken steps to ensure the accuracy of this version, but it is not the official version.

from zero to one with increasing concentration (U.S. EPA, 2014c, p. 5-6; U.S. EPA 2013, p. 9-101). The first step in calculating the seasonal W126 index, as described and considered in this review, is to sum the weighted ambient O_3 concentrations during daylight hours (defined as 8:00 a.m. to 8:00 p.m.) within each calendar month, resulting in monthly index values (U.S. EPA, 2014b, pp. 4-5 to 4-6). As more completely described in the WREA, the monthly W126 index values are calculated from hourly O_3 concentrations as follows:

$$\boldsymbol{Monthly}\ \mathbf{W126} = \sum_{d=1}^{N} \sum_{h=8}^{19} \frac{C_{dh}}{1+4403*\exp(-126*C_{dh})}$$

where N is the number of days in the month, d is the day of the month (d = 1, 2, …, N), h is the hour of the day (h = 0, 1, …, 23), and C_{dh} is the hourly O_3 concentration observed on day d, hour h, in parts per million. The seasonal W126 index value for a specific year is the maximum sum of the monthly index values for three consecutive months. Three-year W126 index values are calculated by taking the average of seasonal W126 index values for three consecutive years (U.S. EPA, 2014b, pp. 4-5 to 4-6; Wells, 2014a).

2. Overview of Welfare Exposure and Risk Assessment

This section outlines the information presented in section IV.C of the proposal regarding the WREA conducted for this review, which built upon similar analyses performed in the last review. The WREA focuses primarily on analyses related to two types of effects on vegetation: reduced growth (biomass loss) in both trees and agricultural crops, and foliar injury. The assessments of O_3-associated reduced growth in native trees and crops (specifically, RBL and RYL, respectively) include analysis of associated changes in related ecosystem services, including pollution removal, carbon sequestration or storage, and hydrology, as well as economic impacts on the forestry and agriculture sectors of the economy. The foliar injury assessments

This document is a prepublication version, signed by EPA Administrator, Gina McCarthy on 10/1/2015. We have taken steps to ensure the accuracy of this version, but it is not the official version.

include cumulative analyses of the proportion of USFS biosite index scores[165] above zero (or five, in a separate set of analyses) with increasing W126 exposure index estimates, with and without consideration of soil moisture conditions. The implications of visible foliar injury in national parks were considered in a screening level assessment and three case studies.[166]

Growth-related effects were assessed for W126-based exposure estimates in five scenarios of national-scale[167] air quality: recent conditions (2006 to 2008), the existing secondary standard, and W126 index values of 15 ppm-hrs, 11 ppm-hrs, and 7 ppm-hrs, using 3-year averages (U.S. EPA, 2014b, chapter 4). For each of these scenarios, 3-year average W126 exposure index values were estimated for 12 kilometer (km) by 12 km grid cells in a national-scale spatial surface. The method for creating these grid cell estimates generally involved two steps (summarized in Table 5-4 of the PA).

The first step in creating the grid cell estimates for each scenario was calculation of the average W126 index value (across the three years) at each monitor location. For the recent conditions scenario, this value was based on unadjusted O_3 concentrations from monitoring data. For the other four scenarios, the W126 index value for each monitor location was calculated from model-adjusted hourly O_3 concentrations. The adjusted concentrations were based on model-predicted relationships between O_3 at each monitor location and reductions in NO_X.

---

[165] Sampling sites in the FIA/FHM O_3 biomonitoring program, called "biosites", are plots of land on which data are collected regarding the incidence and severity of visible foliar injury on a variety of O_3-sensitive plant species. Biosite index scores are derived from these data (U.S. EPA, 2014b, section 7.2.1).

[166] All of the analyses are described in detail in the WREA and summarized in the PA and in section IV.C of the proposal (U.S. EPA, 2014a; U.S. EPA, 2014b; 79 FR 75324-75329, December 17, 2014).

[167] Although the scenarios and the grid cell O_3 concentrations on which they are based were limited to the contiguous U.S., we have generally used the phrase "national-scale" in reference to the WREA scenarios and surfaces.

This document is a prepublication version, signed by EPA Administrator, Gina McCarthy on 10/1/2015. We have taken steps to ensure the accuracy of this version, but it is not the official version.

Adjustments were applied independently for each of the nine U.S. regions (see U.S. EPA, 2014b, section 4.3.4.1).[168] The existing standard scenario was created first, with the result being a national dataset for which the highest monitor location in each U.S. region had a design value equal to the level of the current standard.[169] The W126 scenarios were created from the hourly concentrations used to create the existing standard scenario, with model-based adjustments made at all monitor sites in those regions with a site not already at or below the target W126 value for that scenario (U.S. EPA, 2014b, section 4.3.4.1).[170]

After completing step one for all the scenarios, the second step involved creating the national-scale spatial surfaces (composed of 3-year W126 index values at grid cell centroids). These were created by applying the Voronoi Neighbor Averaging (VNA) spatial interpolation technique to the monitor-location, 3-year W126 index values (described in step 1).[171] This step of creating the gridded spatial surfaces resulted in further reduction of the highest values in each modeling region, as demonstrated by comparing the W126 index values from steps one and two for the existing standard scenario. After the step-one adjustment of the monitor location concentrations such that the highest location in each NOAA region just met the existing standard (using relationships mentioned above), the maximum 3-year average W126 values in the nine

[168] The U.S. regions referenced here and in section IV.C below are NOAA climate regions, as shown in Figure 2B-1 of the PA.
[169] The adjustment results in broad regional reductions in O_3 and includes reductions in O_3 at some monitors that were already at or below the target level. These reductions do not represent an optimized control scenario, but rather characterize one potential distribution of air quality across a region that meets the scenario target (U.S. EPA, 2014b, sections 4.3.4.2 and 4.4).
[170] In regions where the air quality adjustment was applied, it was based on emissions reductions determined necessary for the highest monitor in that region to just equal the existing standard or the W126 target for the scenario. Concentrations at all other monitor locations in the region were also adjusted based on the same emissions reductions assumptions.
[171] The VNA technique is described in the WREA (U.S. EPA, 2014b, Appendix 4A).

This document is a prepublication version, signed by EPA Administrator, Gina McCarthy on 10/1/2015. We have taken steps to ensure the accuracy of this version, but it is not the official version.

regions ranged from 18.9 ppm-hrs in the West region to 2.6 ppm-hrs in the Northeast region (U.S. EPA, 2014b, Table 4-3). After application of the VNA technique in the second step, however, the highest 3-year average W126 values across the national surface grid cells, which were in the Southwest region, were below 15 ppm-hrs (U.S. EPA, 2014b, Figure 4-7).[172]

All of the assessments based on growth impacts relied on the W126 index estimates from the national-scale spatial surfaces (created from the 3-year average monitor location values as described above). Among the analyses related to visible foliar injury, a small component of the screening-level national park assessment and also the three national park case studies involved summarizing 3-year W126 index estimates from the four air quality scenarios. However, the visible foliar injury cumulative proportion analyses and a component of the national park screening-level assessment relied on national-scale spatial surfaces of single-year, unadjusted W126 index values created for each year from 2006 through 2010 using the VNA interpolation technique applied to the monitor location index values for these years (U.S. EPA, 2014b, section 4.3.2, Appendix 4A).

Because the W126 estimates generated for the different air quality scenarios assessed are inputs to the vegetation risk analyses for tree biomass and crop yield loss, and also used in some components of the visible foliar injury assessments, limitations and uncertainties in the air quality analyses, which are discussed in detail in the WREA and some of which are mentioned here, are propagated into those analyses (U.S. EPA, 2014b, chapters 4 and 8 and section 8.5, Table 4-5). An important uncertainty in the analyses is the application of regionally determined

[172] Thus, it can be seen that application of the VNA interpolation method to estimate W126 index values at the centroid of every 12 km x 12 km grid cell rather than only at each monitor location results in a lowering of the highest values in each region.

This document is a prepublication version, signed by EPA Administrator, Gina McCarthy on 10/1/2015. We have taken steps to ensure the accuracy of this version, but it is not the official version.

emissions reductions to meet the existing standard (U.S. EPA, 2014b, section 8.5.1). The model adjustments are based on emissions reductions in NOx and characterize only one potential distribution of air quality across a region when all monitor locations meet the standard, as well as for the W126 scenarios (U.S. EPA, 2014b, section 4.3.4.2).[173]

An additional uncertainty related to the W126 index estimates in the national surfaces for each air quality scenario, and to the estimates for the single-year surfaces used in the visible foliar injury cumulative analysis, comes with the creation of the national-scale spatial surfaces of grid cells from the monitor-location O_3 data.[174] In general, spatial interpolation techniques perform better in areas where the O_3 monitoring network is denser. Therefore, the W126 index values estimated using this technique in rural areas in the West, Northwest, Southwest, and West North Central regions where there are few or no monitors (U.S. EPA, 2014b, Figure 2-1) are more uncertain than those estimated for areas with denser monitoring. Further, as described above, this interpolation method generally underpredicts the highest W126 exposure index values. Due to the important influence of higher exposures in determining risks to plants, the potential for the VNA interpolation approach to dampen peak W126 index values could result in an underestimation of risks to vegetation in some areas.[175]

---

[173] The adjustment is applied to all monitor locations in each region. In this way, the adjustment results in broad regional reductions in O_3 and includes reductions in O_3 at some monitors that were already meeting or below the target level. Thus, the adjustments performed to develop a scenario meeting a target level at the highest monitor in each region did result in substantial reduction below the target level in some areas of the region. This result at the monitors already well below the target indicates an uncertainty with regard to air quality expected from specific control strategies that might be implemented to meet a particular target level.

[174] Some uncertainty is inherent in any approach to characterizing O_3 air quality over broad geographic areas based on concentrations at monitor locations.

[175] In the visible foliar injury dataset used for the cumulative analysis, underestimation of W126 index values at sites with injury would contribute to overestimates of the cumulative proportion of sites with injury plotted for the lower W126 values.

This document is a prepublication version, signed by EPA Administrator, Gina McCarthy on 10/1/2015. We have taken steps to ensure the accuracy of this version, but it is not the official version.

The vegetation analyses performed in the WREA, along with key observations, insights, uncertainties and limitations were summarized in sections IV.C.2 through IV.C.3 of the proposal. Highlights for the three categories of biomass loss and foliar injury assessments are summarized here.

a. Tree Growth, Productivity and Carbon Storage

These assessments rely on the species-specific E-R functions described in section IV.A.1.b above. For the air quality scenarios described above, the WREA applied the species-specific E-R functions to develop estimates of O_3-associated RBL and associated effects on productivity, carbon storage and associated ecosystem services (U.S. EPA, 2014b, Chapter 6). More specifically, the WREA derived species-specific and weighted RBL estimates for grid cells across the continental U.S. and summarized the estimates by counties and national parks. Additional WREA case study analyses focused on selected urban areas. The WREA estimates indicate substantial heterogeneity in plant responses to O_3, both within species (e.g., study-specific variation), between species, and across regions of the U.S. National variability in the estimates (e.g., eastern vs western U.S.) is influenced by there being different sets of resident species (with different E-R functions) in different areas of the U.S., as well as differences in number of national parks and O_3 monitors. For example, the eastern U.S. has different resident species compared to the western U.S., and the eastern U.S. has far more such species. Additionally, there are more national parks in the western than the eastern U.S., yet fewer O_3 monitors (U.S. EPA, 2014b, chapter 8).

Relative biomass loss nationally (across all of the air quality surface grid cells) was estimated for each of the 12 studied species from the composite E-R functions for each species described above and information on the distribution of those species across the U.S. (U.S. EPA,

This document is a prepublication version, signed by EPA Administrator, Gina McCarthy on 10/1/2015. We have taken steps to ensure the accuracy of this version, but it is not the official version.

2014b, section 6.2.1.3 and Appendix 6A). In consideration of CASAC advice (summarized in section IV.A.1.b above), the WREA derived RBL and weighted RBL (wRBL) estimates separately, both with and without the eastern cottonwood, and the PA and proposal gave primary focus to analyses that exclude cottonwood. These analyses provided estimates of per-species and cross-species RBL in the different air quality scenarios. Air quality scenario estimates were also developed in terms of proportion of basal area affected at different magnitudes of RBL. The wRBL analysis integrated the species-specific estimates, providing an indication of potential magnitude of ecological effect possible in some ecosystems. The county analyses also included analyses focused on the median species response. The WREA also used the E-R functions to estimate RBL across tree lifespans and the resulting changes in consumer and producer/farmer economic surplus in the forestry and agriculture sectors of the economy. Case studies in five urban areas provided comparisons across air quality scenarios of estimates for urban tree pollutant removal and carbon storage or sequestration.

The array of uncertainties associated with estimates from these tree RBL analyses are summarized in the proposal and described in detail in the WREA, including the potential for the air quality scenarios to underestimate the higher W126 index values and associated implications for the RBL-related estimates, as referenced above.

b. Crop Yield Loss

These assessments rely on the species-specific E-R functions described in section IV.A.1.b above. For the different air quality scenarios, the WREA applied the species-specific E-R functions to develop estimates of O_3 impacts related to crop yield, including annual yield losses estimated for 10 commodity crops grown in the U.S. and how these losses affect producer and consumer economic surpluses (U.S. EPA, 2014b, sections 6.2, 6.5). The WREA derived

This document is a prepublication version, signed by EPA Administrator, Gina McCarthy on 10/1/2015. We have taken steps to ensure the accuracy of this version, but it is not the official version.

estimates of crop RYL nationally and in a county-specific analysis, relying on information regarding crop distribution (U.S. EPA, 2014b, section 6.5). As with the tree analyses described above, the county analysis included estimates based on the median O_3 response across the studied crop species (U.S. EPA, 2014b, section 6.5.1, Appendix 6B).

Overall effects on agricultural yields and producer and consumer surplus depend on the ability of producers/farmers to substitute other crops that are less O_3 sensitive, and the responsiveness, or elasticity, of demand and supply (U.S. EPA, 2014b, section 6.5). The WREA discusses multiple areas of uncertainty associated with the crop yield loss estimates, including those associated with the model-based adjustment methodology as well as those associated with the projection of yield loss using the Forest and Agriculture Sector Optimization Model (with greenhouse gases) at the estimated O_3 concentrations (U.S. EPA, 2014b, Table 6-27, section 8.5). Because the W126 index estimates generated in the air quality scenarios are inputs to the vegetation risk analyses for crop yield loss, any uncertainties in the air quality scenario estimation of W126 index values are propagated into those analyses (U.S. EPA, 2014b, Table 6-27, section 8.5). Therefore, the air quality scenarios in the crop yield analyses have the same uncertainties and limitations as in the biomass loss analyses (summarized above), including those associated with the model-based adjustment methodology (U.S. EPA, 2014b, section 8.5).

c. Visible Foliar Injury

The WREA presents a number of analyses of O_3-related visible foliar injury and associated ecosystem services impacts (U.S. EPA, 2014b, Chapter 7). In the initial analysis, the WREA used the biomonitoring site data from the USFS FHM/FIA Network (USFS, 2011),[176]

[176] Data were not available for several western states (Montana, Idaho, Wyoming, Nevada, Utah, Colorado, Arizona, New Mexico, Oklahoma, and portions of Texas).

This document is a prepublication version, signed by EPA Administrator, Gina McCarthy on 10/1/2015. We have taken steps to ensure the accuracy of this version, but it is not the official version.

associated soil moisture data during the sample years, and national surfaces of ambient air O_3 concentrations based on spatial interpolation of monitoring data from 2006 to 2010 in a cumulative analysis of the proportion of biosite records with any visible foliar injury, as indicated by a nonzero biosite index score (U.S. EPA, 2014b, section 7.2). This analysis was done for all records together, and also for subsets based on soil moisture conditions (normal, wet or dry).

In each cumulative analysis, the biosite records were ordered by W126 index and then, moving from low to high W126 index, the records were cumulated into a progressively larger dataset. With the addition of each new data point (composed of biosite index score and W126 index value for a biosite and year combination) to the cumulative dataset, the percentage of sites with a nonzero biosite index score was derived and plotted versus the W126 index estimate for the just added data point. The cumulative analysis for all sites indicates that (1) as the cumulative set of sites grows with addition of sites with progressively higher W126 index values, the proportion of the dataset for which no foliar injury was recorded changes (increases) noticeably prior to about 10 ppm-hrs (10.46 ppm-hrs), and (2) as the cumulative dataset grows still larger with the addition of records for higher W126 index estimates, the proportion of the cumulative dataset with no foliar injury remains relatively constant (U.S. EPA, 2014b, Figure 7-10). The data for normal moisture years are very similar to the dataset as a whole, with an overall proportion of about 18 percent for presence of any foliar injury. The data for relatively wet years have a much higher proportion of biosites showing injury, approximately 25% when all data are included, and a proportion of approximately 20% when data for W126 index estimates up to

This document is a prepublication version, signed by EPA Administrator, Gina McCarthy on 10/1/2015. We have taken steps to ensure the accuracy of this version, but it is not the official version.

about 5-8 ppm-hrs are included (U.S. EPA, 2014b, Figure 7-10).[177] The overall proportion showing injury for the subset for relatively dry conditions is much lower, less than 15% for the subset (U.S. EPA, 2014b, section 7.2.3, Figures 7-10). While these analyses indicate the potential for foliar injury to occur under conditions that meet the current standard, the extent of foliar injury that might be expected under different exposure conditions is unclear from these analyses.

Criteria derived from the cumulative analyses were then used in two additional analyses. The national-scale screening-level assessment compared W126 index values estimated within 214 national parks using the VNA technique described above for the individual years from 2006 to 2010 with benchmark criteria developed from the biosite data analysis (U.S. EPA, 2014b, Appendix 7A and section 7.3). Separate case study analyses described visits, as well as visitor uses and expenditures for three national parks, and the 3-year W126 index estimates in those parks for the four air quality scenarios (U.S. EPA, 2014b, section 7.4). Uncertainties associated with these analyses, included those associated with the W126 index estimates, are discussed in the WREA, sections 7.5 and 8.5.3, and in WREA Table 7-24, and also summarized in the PA (e.g., U.S. EPA, 2014c, section 6.3).

3. Potential Impacts on Public Welfare

[177] As discussed in section IV.C.2 below, as the cumulative set increases, with increasing W126 values, the overall prevalence of visible foliar injury in the cumulative set is more and more influenced by data for the lower W126 values. Accordingly, the "leveling off" observed above ~10 ppm-hrs in the 'all sites' analysis likely reflects the counterbalancing of visible foliar injury occurrence at the relatively fewer higher O_3 sites by the larger representation within the subset of the lower W126 conditions associated with which there is lower occurrence or extent of foliar injury.

This document is a prepublication version, signed by EPA Administrator, Gina McCarthy on 10/1/2015. We have taken steps to ensure the accuracy of this version, but it is not the official version.

As provided in the CAA, section 109(b)(2), the secondary standard is to "specify a level of air quality the attainment and maintenance of which in the judgment of the Administrator … is requisite to protect the public welfare from any known or anticipated adverse effects associated with the presence of such air pollutant in the ambient air." Effects on welfare include, but are not limited to, "effects on soils, water, crops, vegetation, man-made materials, animals, wildlife, weather, visibility, and climate, damage to and deterioration of property, and hazards to transportation, as well as effects on economic values and on personal comfort and well-being" (CAA section 302(h)). The secondary standard is not meant to protect against all known or anticipated O_3-related effects, but rather those that are judged to be adverse to the public welfare, and a bright-line determination of adversity is not required in judging what is requisite (78 FR 8312, January 15, 2013; see also 73 FR 16496, March 27, 2008). Thus, the level of protection from known or anticipated adverse effects to public welfare that is requisite for the secondary standard is a public welfare policy judgment to be made by the Administrator. In the current review, the Administrator's judgment is informed by conclusions drawn with regard to adversity of effects to public welfare in decisions on secondary O_3 standards in past reviews.

As indicated by the Administrator in the 2008 decision, the degree to which O_3 effects on vegetation should be considered to be adverse to the public welfare depends on the intended use of the vegetation and the significance of the vegetation to the public welfare (73 FR 16496, March 27, 2008). Such judgments regarding public welfare significance in the last O_3 NAAQS decision gave particular consideration to O_3 effects in areas with special federal protections, and lands set aside by states, tribes and public interest groups to provide similar benefits to the public welfare (73 FR 16496, March 27, 2008). For example, in reaching his conclusion regarding theneed for revision of the secondary standard in the 2008 review, the Administrator took note of

This document is a prepublication version, signed by EPA Administrator, Gina McCarthy on 10/1/2015. We have taken steps to ensure the accuracy of this version, but it is not the official version.

"a number of actions taken by Congress to establish public lands that are set aside for specific uses that are intended to provide benefits to the public welfare, including lands that are to be protected so as to conserve the scenic value and the natural vegetation and wildlife within such areas, and to leave them unimpaired for the enjoyment of future generations" (73 FR 16496, March 27, 2008). As further recognized in the 2008 notice, "[s]uch public lands that are protected areas of national interest include national parks and forests, wildlife refuges, and wilderness areas" (73 FR 16496, March 27, 2008).[178,179] Such areas include Class I areas[180] which are federally mandated to preserve certain air quality related values. Additionally, as the Administrator recognized, "States, Tribes and public interest groups also set aside areas that are intended to provide similar benefits to the public welfare, for residents on State and Tribal lands, as well as for visitors to those areas" (73 FR 16496, March 27, 2008). The Administrator took note of the "clear public interest in and value of maintaining these areas in a condition that does

[178] For example, the National Park Service Organic Act of 1916 established the National Park Service (NPS) and, in describing the role of the NPS with regard to "Federal areas known as national parks, monuments, and reservations", stated that the "fundamental purpose" for these federal areas "is to conserve the scenery and the natural and historic objects and the wild life therein and to provide for the enjoyment of the same in such manner and by such means as will leave them unimpaired for the enjoyment of future generations." 16 U.S.C. § 1.

[179] As a second example, the Wilderness Act of 1964 defines designated "wilderness areas" in part as areas "protected and managed so as to preserve [their] natural conditions" and requires that these areas "shall be administered for the use and enjoyment of the American people in such manner as will leave them unimpaired for future use and enjoyment as wilderness, and so as to provide for the protection of these areas, [and] the preservation of their wilderness character …" 16 U.S.C. § 1131 (a).

[180] Areas designated as Class I include all international parks, national wilderness areas which exceed 5,000 acres in size, national memorial parks which exceed 5,000 acres in size, and national parks which exceed six thousand acres in size, provided the park or wilderness area was in existence on August 7, 1977. Other areas may also be Class I if designated as Class I consistent with the CAA.

This document is a prepublication version, signed by EPA Administrator, Gina McCarthy on 10/1/2015. We have taken steps to ensure the accuracy of this version, but it is not the official version.

not impair their intended use and the fact that many of these lands contain O_3-sensitive species" (73 FR 16496, March 27, 2008).

The concept described in the 2008 notice regarding the degree to which effects on vegetation in specially protected areas, such as those identified above, may be judged adverse also applies beyond the species level to the ecosystem level, such that judgments can depend on the intended use[181] for, or service (and value) of, the affected vegetation, ecological receptors, ecosystems and resources and the significance of that use to the public welfare (73 FR 16496, March 27, 2008). Uses or services provided by areas that have been afforded special protection can flow in part or entirely from the vegetation that grows there. Aesthetic value and outdoor recreation depend, at least in part, on the perceived scenic beauty of the environment (U.S. EPA, 2014b, chapters 5 and 7). Further, analyses have reported that the American public values – in monetary as well as nonmonetary ways – the protection of forests from air pollution damage. In fact, studies that have assessed willingness-to-pay for spruce-fir forest protection in the southeastern U.S. from air pollution and insect damage have found that values held by the survey respondents for the more abstract services (existence, option and bequest)[182] were greater than

[181] Ecosystem services have been defined as "the benefits that people obtain from ecosystems" (U.S. EPA, 2013a, Preamble, p. 1xxii; UNEP, 2003) and thus are an aspect of the use of a type of vegetation or ecosystem. Similarly, a definition used for the purposes of the EPA benefits assessments states that ecological goods and services are the "outputs of ecological functions or processes that directly or indirectly contribute to social welfare or have the potential to do so in the future" and that "[s]ome outputs may be bought and sold, but most are not marketed" (U.S. EPA, 2006b). Ecosystem services analyses were one of the tools used in the last review of the secondary standards for oxides of nitrogen and sulfur to inform the decisions made with regard to adequacy and as such, were used in conjunction with other considerations in the discussion of adversity to public welfare (77 FR 20241, April 3, 2012).

[182] Public surveys have indicated that Americans rank as very important the existence of resources, the option or availability of the resource and the ability to bequest or pass it on to future generations (Cordell et al., 2008).

This document is a prepublication version, signed by EPA Administrator, Gina McCarthy on 10/1/2015. We have taken steps to ensure the accuracy of this version, but it is not the official version.

those for recreation or other services (U.S. EPA, 2014b, Table 5-6; Haefele et al., 1991; Holmes and Kramer, 1995).

The spatial, temporal and social dimensions of public welfare impacts are also influenced by the type of service affected. For example, a national park can provide direct recreational services to the thousands of visitors that come each year, but also provide an indirect value to the millions who may not visit but receive satisfaction from knowing it exists and is preserved for the future (U.S. EPA, 2014b, chapter 5, section 5.5.1). Similarly, ecosystem services can be realized over a range of temporal scales. An evaluation of adversity to the public welfare might also consider the likelihood, type, and magnitude of the effect, as well as the potential for recovery and any uncertainties relating to these conditions, as stated in the preamble of the 2012 final notice of rulemaking on the secondary standards for oxides of nitrogen and sulfur (77 FR 20232, April 3, 2012).

The three main categories of effects on vegetation discussed in section IV.A.1.b above differ with regard to aspects important to judging their public welfare significance. Judgments regarding crop yield loss, for example, depend on considerations related to the heavy management of agriculture in the U.S., while judgments regarding the other categories of effects generally relate to considerations regarding forested areas. For example, while both tree growth-related effects and visible foliar injury have the potential to be significant to the public welfare through impacts in Class I and other protected areas, they differ in how they might be significant and with regard to the clarity of the data that describe the relationship between the effect and the services potentially affected.

With regard to effects on tree growth, reduced growth is associated with effects on an array of ecosystem services including reduced productivity, altered forest and forest community

This document is a prepublication version, signed by EPA Administrator, Gina McCarthy on 10/1/2015. We have taken steps to ensure the accuracy of this version, but it is not the official version.

(plant, insect and microbe) composition, reduced carbon storage and altered water cycling (U.S. EPA, 2013, Figure 9-1, sections 9.4.1.1 and 9.4.1.2; U.S. EPA, 2014b, section 6.1). For example, forest or forest community composition can be affected through O_3 effects on growth and reproductive success of sensitive species in the community, with the extent of compositional changes dependent on factors such as competitive interactions (U.S. EPA, 2013, sections 9.4.3 and 9.4.3.1). Depending on the type and location of the affected ecosystem, services benefitting the public in other ways can be affected as well. For example, other services valued by people that can be affected by reduced tree growth, productivity and carbon storage include aesthetic value, food, fiber, timber, other forest products, habitat, recreational opportunities, climate and water regulation, erosion control, air pollution removal, and desired fire regimes (U.S. EPA 2013, sections 9.4.1.1 and 9.4.1.2; U.S. EPA, 2014b, section 6.1, Figure 6-1, section 6.4, Table 6-13). Further, impacts on some of these services (e.g., forest or forest community composition) may be considered of greater public welfare significance when occurring in Class I or other protected areas.

Consideration of the magnitude of tree growth effects that might cause or contribute to adverse effects for trees, forests, forested ecosystems or the public welfare is complicated by aspects of, or limitations in, the available information. For example, the evidence on tree seedling growth effects, deriving from the E-R functions for 11 species (described in section IV.A.1 above), provides no clear threshold or breakpoint in the response to O_3 exposure. Additionally, there are no established relationships between magnitude of tree seedling growth reduction and forest ecosystem impacts and, as noted in section IV.A.1.b above, other factors can influence the degree to which O_3-induced growth effects in a sensitive species affect forest and forest community composition and other ecosystem service flows from forested ecosystems.

This document is a prepublication version, signed by EPA Administrator, Gina McCarthy on 10/1/2015. We have taken steps to ensure the accuracy of this version, but it is not the official version.

These include 1) the type of stand or community in which the sensitive species is found (i.e., single species versus mixed canopy); 2) the role or position the species has in the stand (i.e., dominant, sub-dominant, canopy, understory); 3) the O_3 sensitivity of the other co-occurring species (O_3 sensitive or tolerant); and 4) environmental factors, such as soil moisture and others. The lack of such established relationships complicates judgments as to the extent to which different estimates of impacts on tree seedling growth would indicate significance to the public welfare and thus be an important consideration in the level of protection for the secondary standard.

During the 1997 review of the secondary standard, views related to this issue were provided by a 1996 workshop of 16 leading scientists in the context of discussing their views for a secondary O_3 standard (Heck and Cowling, 1997). In their consideration of tree growth effects as an indicator for forest ecosystems and crop yield reduction as an indicator of agricultural systems, the workshop participants identified annual percentages, of RBL for forest tree seedlings and RYL for agricultural crops, considered important to their judgments on the standard. With regard to forest ecosystems and seedling growth effects as an indicator, the participants selected a range of 1-2% RBL per year "to avoid cumulative effects of yearly reductions of 2%." With regard to crops, they indicated an interest in protecting against crop yield reductions of 5% RYL yet noted uncertainties surrounding such a percentage which led them to identifying 10% RYL for the crop yield endpoint (Heck and Cowling, 1997). The workshop report provides no explicit rationale for the percentages identified (1-2% RBL and 5% or 10% RYL); nor does it describe their connection to ecosystem impacts of a specific magnitude or type, nor to judgments on significance of the identified effects for public welfare, e.g., taking into consideration the intended use and significance of the affected vegetation (Heck and

This document is a prepublication version, signed by EPA Administrator, Gina McCarthy on 10/1/2015. We have taken steps to ensure the accuracy of this version, but it is not the official version.

Cowling, 1997). In recognition of the complexity of assessing the adversity of tree growth effects and effects on crop yield in the broader context of public welfare, the EPA's consideration of those effects in both the 1997 and 2008 reviews extended beyond the consideration of various benchmark responses for the studied species, and, with regard to crops, additionally took note of their extensive management (62 FR 38856, July 18, 1997; 73 FR 16436, March 27, 2008).

While, as noted above, public welfare benefits of forested lands can be particular to the type of area in which the forest occurs, some of the potential public welfare benefits associated with forest ecosystems are not location dependent. A potentially extremely valuable ecosystem service provided by forested lands is carbon storage, a regulating service that is "of paramount importance for human society" (U.S. EPA, 2013, section 2.6.2.1 and p. 9-37). As noted above, the EPA has concluded that this ecosystem service has a likely causal relationship with O_3 in ambient air. The service of carbon storage is potentially important to the public welfare no matter in what location the sensitive trees are growing or what their intended current or future use. In other words, the benefit exists as long as the tree is growing, regardless of what additional functions and services it provides. Another example of locations potentially vulnerable to O_3-related impacts but not necessarily identified for such protection might be forested lands, both public and private, where trees are grown for timber production. Forests in urbanized areas also provide a number of services that are important to the public in those areas, such as air pollution removal, cooling, and beautification. There are also many other tree species, such as species identified by the USFS and various ornamental and agricultural species (e.g., Christmas trees, fruit and nut trees), that provide ecosystem services that may be judged important to the public welfare but whose vulnerability to O_3 impacts has not been quantitatively characterized (U.S. EPA, 2014b, Chapter 6).

This document is a prepublication version, signed by EPA Administrator, Gina McCarthy on 10/1/2015. We have taken steps to ensure the accuracy of this version, but it is not the official version.

As noted above, in addition to tree growth-related effects, O_3-induced visible foliar injury also has the potential to be significant to the public welfare through impacts in Class I and other similarly protected areas. Visible foliar injury is a visible bioindicator of O_3 exposure in species sensitive to this effect, with the injury affecting the physical appearance of the plant. Accordingly visible foliar injury surveys are used by federal land managers as tools in assessing potential air quality impacts in Class I areas. These surveys may focus on plant species that have been identified as potentially sensitive air quality related values (AQRVs) due to their sensitivity to O_3-induced foliar injury (USFS, NPS, FWS, 2010). An AQRV is defined by the National Park Service as a "resource, as identified by the [federal land manager] for one or more Federal areas that may be adversely affected by a change in air quality," and the resource "may include visibility or a specific scenic, cultural, physical, biological, ecological, or recreational resource identified by the [federal land manager] for a particular area" (USFS, NPS, USFWS, 2010).[183] No criteria have been established, however, regarding a level or prevalence of visible foliar injury considered to be adverse to the affected vegetation, and, as noted in section IV.A.1.b above, there is not a clear relationship between visible foliar injury and other effects, such as

[183] The identification, monitoring and assessment of AQRVs with regard to an adverse effect is an approach used for assessing the potential for air pollution impacts in Class I areas from pending permit actions (USFS, NPS, USFWS, 2010). An adverse impact is recognized by the National Park Service as one that results in diminishment of the Class I area's national significance or the impairment of the ecosystem structure or functioning, as well as impairment of the quality of the visitor experience (USFS, NPS, USFWS, 2010). Federal land managers make such adverse impact determinations on a case-by-case basis, using technical and other information that they provide for consideration by permitting authorities. The National Park Service has developed a document describing an overview of approaches related to assessing projects under the National Environmental Policy Act and other planning initiatives affecting the National Park System (http://www.nature.nps.gov/air/Pubs/pdf/AQGuidance_2011-01-14.pdf).

This document is a prepublication version, signed by EPA Administrator, Gina McCarthy on 10/1/2015. We have taken steps to ensure the accuracy of this version, but it is not the official version.

reduced growth and productivity.[184] Thus, key considerations with regard to public welfare significance of this endpoint have related to qualitative consideration of the plant's aesthetic value in protected forested areas. Depending on the extent and severity, O_3-induced visible foliar injury might be expected to have the potential to impact the public welfare in scenic and/or recreational areas during the growing season, particularly in areas with special protection, such as Class I areas.

The ecosystem services most likely to be affected by O_3-induced visible foliar injury (some of which are also recognized above for tree growth-related effects) are cultural services, including aesthetic value and outdoor recreation. In addition, several tribes have indicated that many of the species identified as O_3 sensitive (including bioindicator species) are culturally significant (U.S. EPA, 2014c, Table 5-1). The geographic extent of protected areas that may be vulnerable to such public welfare effects of O_3 is potentially appreciable. Sixty-six plant species that occur on U.S. National Park Service (NPS) and U.S. Fish and Wildlife Service lands[185] have been identified as sensitive to O_3-induced visible foliar injury, and some also have particular cultural importance to some tribes (U.S. EPA, 2014c, Table 5-1 and Appendix 5-A; U.S. EPA, 2014b, section 6.4.2). Not all species are equally sensitive to O_3, however, and quantitative E-R

[184] The National Park Service identifies various ranges of W126 index values in providing approaches for assessing air quality-related impacts of various development projects which appear to be based on the 1996 workshop report (Heck and Cowling, 1997), and may, at the low end, relate to a benchmark derived for the highly sensitive species, black cherry, for growth effects (10% RBL), rather than visible foliar injury (Kohut, 2007; Lefohn et al., 1997). As noted in section IV.A.1.b above, visible foliar injury is not always a reliable indicator of other negative effects on vegetation (U.S. EPA, 2013a, p. 9-39). We also note that the USFS biomonitoring analyses of visible foliar injury biomonitoring data commonly make use of a set of biosite index categories for which risk assumptions have been assigned, providing a relative scale of possible impacts (Campbell et al, 2007); however, little information is available on the studies, effects and judgments on which these categories are based.

[185] See http://www2.nature.nps.gov/air/Pubs/pdf/flag/NPSozonesensppFLAG06.pdf.

This document is a prepublication version, signed by EPA Administrator, Gina McCarthy on 10/1/2015. We have taken steps to ensure the accuracy of this version, but it is not the official version.

relationships for O_3 exposure and other important effects, such as seedling growth reduction, are only available for a subset of 12 of the 66, as summarized in section IV.A.1.b above. A diverse array of ecosystem services has been identified for these twelve species (U.S. EPA, 2014c, Table 5-1). Two species in this group that are slightly more sensitive than the median for the group with regard to effects on growth are the ponderosa pine and quaking aspen (U.S. EPA, 2014b, section 6.2), the ranges for which overlap with many lands that are protected or preserved for enjoyment of current and future generations (consistent with the discussion above on Class I and other protected areas), including such lands located in the west and southwest regions of the U.S. where ambient O_3 concentrations and associated cumulative seasonal exposures can be highest (U.S. EPA, 2014c, Appendix 2B).[186]

With regard to agriculture-related effects, the EPA has recognized other complexities, stating that the degree to which O_3 impacts on vegetation that could occur in areas and on species that are already heavily managed to obtain a particular output (such as commodity crops or commercial timber production) would impair the intended use at a level that might be judged adverse to the public welfare has been less clear (73 FR 16497, March 27, 2008). As noted in section IV.B.2 of the proposal, while having sufficient crop yields is of high public welfare value, important commodity crops are typically heavily managed to produce optimum yields. Moreover, based on the economic theory of supply and demand, increases in crop yields would be expected to result in lower prices for affected crops and their associated goods, which would primarily benefit consumers. These competing impacts on producers and consumers complicate

[186] Basal area for resident species in national forests and parks are available in files accessible at: http://www.fs.fed.us/foresthealth/technology/nidrm2012.shtml. Basal area is generally described as the area of ground covered by trees.

This document is a prepublication version, signed by EPA Administrator, Gina McCarthy on 10/1/2015. We have taken steps to ensure the accuracy of this version, but it is not the official version.

consideration of these effects in terms of potential adversity to the public welfare (U.S. EPA, 2014c, sections 5.3.2 and 5.7). When agricultural impacts or vegetation effects in other areas are contrasted with the emphasis on forest ecosystem effects in Class I and similarly protected areas, it can be seen that the Administrator has in past reviews judged the significance to the public welfare of O_3-induced effects on sensitive vegetation growing within the U.S. to differ depending on the nature of the effect, the intended use of the sensitive plants or ecosystems, and the types of environments in which the sensitive vegetation and ecosystems are located, with greater significance ascribed to areas identified for specific uses and benefits to the public welfare, such as Class I areas, than to areas for which such uses have not been established (FR 73 16496-16497, March 27, 2008).

In summary, several considerations are recognized as important to judgments on the public welfare significance of the array of effects of different O_3 exposure conditions on vegetation. While there are complexities associated with the consideration of the magnitude of key vegetation effects that might be concluded to be adverse to ecosystems and associated services, there are numerous locations where O_3-sensitive tree species are present that may be vulnerable to impacts from O_3 on tree growth, productivity and carbon storage and their associated ecosystems and services. Cumulative exposures that may elicit effects and the significance of the effects in specific situations can vary due to differences in exposed species sensitivity, the importance of the observed or predicted O_3-induced effect, the role that the species plays in the ecosystem, the intended use of the affected species and its associated ecosystem and services, the presence of other co-occurring predisposing or mitigating factors, and associated uncertainties and limitations. These factors contribute to the complexity of the

This document is a prepublication version, signed by EPA Administrator, Gina McCarthy on 10/1/2015. We have taken steps to ensure the accuracy of this version, but it is not the official version.

Administrator's judgments regarding the adversity of known and anticipated effects to the public welfare.

B. Need for Revision of the Secondary Standard

The initial issue to be addressed in this review of the secondary standard for O_3 is whether, in view of the currently available scientific evidence, exposure and risk information and air quality analyses, as reflected in the record, the standard should be retained or revised. In drawing conclusions on adequacy of the current O_3 secondary standard, the Administrator has taken into account both evidence-based and quantitative exposure- and risk-based considerations, as well as advice from CASAC and public comment. Evidence-based considerations draw upon the EPA's assessment and integrated synthesis of the scientific evidence from experimental and field studies evaluating welfare effects related to O_3 exposure, with a focus on policy-relevant considerations, as discussed in the PA. Air quality analyses inform these considerations with regard to cumulative, seasonal exposures occurring in areas of the U.S. that meet the current standard. Exposure- and risk-based considerations draw upon the EPA assessments of risk of key welfare effects, including O_3 effects on forest growth, productivity, carbon storage, crop yield and visible foliar injury, expected to occur in model-based scenarios for the current standard, with appropriate consideration of associated uncertainties.

In evaluating whether it is appropriate to revise the current standard, the Administrator's considerations build on the general approach used in the last review, as summarized in section IV.A of the proposal, and reflect the body of evidence and information available during this review. The approach used is based on an integration of the information on vegetation effects associated with exposure to O_3 in ambient air, as well as policy judgments on the adversity of such effects to public welfare and on when the standard is requisite to protect public welfare

This document is a prepublication version, signed by EPA Administrator, Gina McCarthy on 10/1/2015. We have taken steps to ensure the accuracy of this version, but it is not the official version.

from known or anticipated adverse effects. Such judgments are informed by air quality and related analyses, quantitative assessments, when available, and qualitative assessment of impacts that could not be quantified. The Administrator has taken into account both evidence of effects on vegetation and ecosystems and public uses of these entities that may be important to the public welfare. The decision on adequacy of the protection provided by the current standard has also considered the 2013 remand of the secondary standard by the D.C. Circuit such that this decision incorporates the EPA's response to this remand.

Section IV.B.1 below summarizes the basis for the proposed decision by the Administrator that the current secondary standard should be revised. Significant comments received from the public on the proposal are discussed in section IV.B.2 and the Administrator's final decision is described in section IV.B.3.

1. Basis for Proposed Decision

In evaluating whether it was appropriate to propose to retain or revise the current standard, as discussed in section IV.D of the proposal, the Administrator carefully considered the assessment of the current evidence in the ISA, findings of the WREA, including associated limitations and uncertainties, considerations and staff conclusions and associated rationales presented in the PA, views expressed by CASAC, and public comments that had been offered up to that point. In the paragraphs below, we summarize the proposal presentation of the PA considerations with regard to adequacy of the current secondary standard, advice from the CASAC, and the Administrator's proposed conclusions, drawing from section IV.D of the proposal, where a fuller discussion is presented.

a. Considerations and Conclusions in the PA

The PA evaluation is based on the longstanding evidence for O_3 effects and the

This document is a prepublication version, signed by EPA Administrator, Gina McCarthy on 10/1/2015. We have taken steps to ensure the accuracy of this version, but it is not the official version.

associated conclusions in the current review of causal and likely causal relationships between O_3 in ambient air and an array of welfare effects at a range of biological and ecological scales of organization, as summarized in section IV.A.1 above (and described in detail in the ISA). Drawing from the ISA and CASAC advice, the PA emphasizes the strong support in the evidence for the conclusion that effects on vegetation are attributable to cumulative seasonal O_3 exposures, taking note of the improved "explanatory power" (for effects on vegetation) of the W126 index over other exposure metrics, as summarized in section IV.A.1.c above. The PA further recognizes the strong basis in the evidence for the conclusion that it is appropriate to use a cumulative seasonal exposure metric, such as the W126 index, to judge impacts of O_3 on vegetation; related effects on ecosystems and services, such as carbon storage; and the level of public welfare protection achieved for such effects (U.S. EPA, 2014c, p. 5-78). As a result, based on the strong support in the evidence and advice from CASAC in the current and past reviews, the PA concludes that the most appropriate and biologically relevant way to relate O_3 exposure to plant growth, and to determine what would be adequate protection for public welfare effects attributable to the presence of O_3 in ambient air, is to characterize exposures in terms of a cumulative seasonal form, and in particular the W126 metric (U.S. EPA, 2014c, pp. 5-7 and 5-78). Accordingly, in considering the evidence with regard to level of protection provided by the current secondary standard, the PA considers air quality data and exposure-response relationships for vegetation effects, particularly those related to forest tree growth, productivity and carbon storage, in terms of the W126 index (U.S. EPA, 2014c, section 5.2; 79 FR 75330-75333, December 17, 2014).

In considering the extent to which such growth-related effects might be expected to occur under conditions that meet the current secondary standard, the PA focused particularly on tree

This document is a prepublication version, signed by EPA Administrator, Gina McCarthy on 10/1/2015. We have taken steps to ensure the accuracy of this version, but it is not the official version.

seedling RBL estimates for the 11 species for which robust E-R functions have been developed, noting the CASAC concurrence with use of O_3-related tree biomass loss as a surrogate for related effects extending to the ecosystem scale (U.S. EPA, 2014c, p. 5-80, Frey, 2014c, p. 10). The PA evaluation relied on RBL estimates for these 11 species derived using the robust OTC-based E-R functions, noting that analyses newly performed in this review have reduced the uncertainty associated with using OTC E-R functions to predict tree growth effects in the field (U.S. EPA, 2014c, section 5.2.1; U.S. EPA, 2013, section 9.6.3.2).

In considering the RBL estimates for different O_3 conditions associated with the current standard, the PA focused primarily on the median of the species-specific (composite) E-R functions. In so doing, in the context of considering the adequacy of protection afforded by the current standard, the PA takes note of CASAC's view regarding a 6% median RBL (Frey, 2014c, p. 12). Based on the summary of RBL estimates in the PA, the PA notes that the median species RBL estimate, across the 11 estimates derived from the robust species-specific E-R functions, is at or above 6% for W126 index values of 19 ppm-hrs and higher (U.S. EPA, 2014c, Tables 6-1 and 5C-3).

In recognition of the potential significance to public welfare of vegetation effects in Class I areas, the proposal described in detail findings of the PA analysis of the occurrence of O_3 concentrations associated with the potential for RBL estimates above benchmarks of interest in Class I areas that meet the current standard, focusing on 22 Class I areas for which air quality data indicated the current standard was met and cumulative seasonal exposures, in terms of a 3-year average W126 index, were at or above 15 ppm-hrs (79 FR 75331-75332, Table 7, December 17, 2014; U.S. EPA, 2014c, Table 5-2). The PA noted that W126 index values (both annual and 3-year average values) in many such areas, distributed across multiple states and NOAA climatic

This document is a prepublication version, signed by EPA Administrator, Gina McCarthy on 10/1/2015. We have taken steps to ensure the accuracy of this version, but it is not the official version.

regions, were above 19 ppm-hrs. The highest 3-year average value was over 22 ppm-hrs and the highest annual value was over 27 ppm-hrs, exposure values for which the corresponding median species RBL estimates markedly exceed 6%, which CASAC has termed "unacceptably high" (U.S. EPA, 2014c, section 5.2). The PA additionally considered the species-specific RBL estimates for two tree species (quaking aspen and ponderosa pine) that are found in many of these Class I areas and that have a sensitivity to O_3 exposure that places them slightly more sensitive than the median of the group for which robust E-R functions have been established (U.S. EPA, 2014c, sections 5.2 and 5.7). As further summarized in the proposal, the PA describes the results of this analysis, particularly in light of advice from CASAC regarding the significance of the 6% RBL benchmark, as evidence of the occurrence in Class I areas, during periods when the current standard is met, of cumulative seasonal O_3 exposures of a magnitude for which the tree growth impacts indicated by the associated RBL estimates might reasonably be concluded to be important to public welfare (79 FR 75332; U.S. EPA, 2014c, sections 5.2.1 and 5.7).

The proposal also noted that the PA additionally considered findings of the WREA analyses of O_3 effects on tree growth and an array of ecosystem services provided by forests, including timber production, carbon storage and air pollution removal (79 FR 75332-75333; U.S. EPA, 2014b, sections 6.2-6.8; U.S. EPA, 2014c, section 5.2). While recognizing that these analyses provide quantitative estimates of impacts on tree growth and associated services for several different air quality scenarios, the PA takes note of the large uncertainties associated with these analyses (see U.S. EPA, 2014b, Table 6-27) and the potential for these findings to underestimate the response at the national scale. While noting the potential usefulness of considering predicted and anticipated impacts to these services in assessing the extent to which

This document is a prepublication version, signed by EPA Administrator, Gina McCarthy on 10/1/2015. We have taken steps to ensure the accuracy of this version, but it is not the official version.

the current information supports or calls into question the adequacy of the protection afforded by the current standard, the PA also recognizes significant uncertainties associated with the absolute magnitude of the estimates for these ecosystem service endpoints which limited the weight staff placed on these results (U.S. EPA, 2014c, sections 5.2 and 5.7).

As described in the proposal, the PA also considered O_3 effects on crops, taking note of the extensive and long-standing evidence of the detrimental effect of O_3 on crop production, which continues to be confirmed by evidence newly available in this review (79 FR 75333; U.S. 2014c, sections 5.3 and 5.7). With regard to consideration of the quantitative impacts of O_3 exposures under exposure conditions associated with the current standard, the PA focused on RYL estimates that had strong support in the current evidence (as characterized in the ISA, section 9.6) in light of CASAC comments regarding RYL benchmarks (Frey, 2014c, pp. iii and 14). In considering such evidence-based analyses, as well as the exposure/risk-based information for crops, the PA notes the CASAC comments regarding the use of crop yields as a surrogate for consideration of public welfare impacts, which noted that "[c]rops provide food and fiber services to humans" and that "[e]valuation of market-based welfare effects of O_3 exposure in forestry and agricultural sectors is an appropriate approach to take into account damage that is adverse to public welfare" (Frey, 2014c, p. 10; U.S. EPA, 2014c, section 5.7). The PA additionally notes, however, as recognized in section IV.A.3 above that the determination of the point at which O_3-induced crop yield loss becomes adverse to the public welfare is still unclear, given that crops are heavily managed (e.g., with fertilizer, irrigation) for optimum yields, have their own associated markets and that benefits can be unevenly distributed between producers and consumers (79 FR 75322; U.S. EPA, 2014c, sections 5.3 and 5.7).

With regard to visible foliar injury, as summarized in the proposal, the PA recognizes the

This document is a prepublication version, signed by EPA Administrator, Gina McCarthy on 10/1/2015. We have taken steps to ensure the accuracy of this version, but it is not the official version.

long-standing evidence that has established that O_3 causes diagnostic visible foliar injury symptoms on studied bioindicator species and also recognizes that such O_3-induced impacts have the potential to impact the public welfare in scenic and/or recreational areas, with visible foliar injury associated with important cultural and recreational ecosystem services to the public, such as scenic viewing, wildlife watching, hiking, and camping, that are of significance to the public welfare and enjoyed by millions of Americans every year, generating millions of dollars in economic value (U.S. EPA, 2014b, section 7.1). In addition, several tribes have indicated that many of the O_3-sensitive species (including bioindicator species) are culturally significant (U.S. EPA, 2014c, Table 5-1). Similarly, the PA notes CASAC comments that "visible foliar injury can impact public welfare by damaging or impairing the intended use or service of a resource," including through "visible damage to ornamental or leafy crops that affects their economic value, yield, or usability; visible damage to plants with special cultural significance; and visible damage to species occurring in natural settings valued for scenic beauty or recreational appeal" (Frey, 2014c, p. 10). Given the above, and taking note of CASAC views, the PA recognizes visible foliar injury as an important O_3 effect which, depending on severity and spatial extent, may reasonably be concluded to be of public welfare significance, especially when occurring in nationally protected areas, such as national parks and other Class I areas.

As summarized in the proposal, the PA additionally takes note of the evidence described in the ISA regarding the role of soil moisture conditions that can decrease the incidence and severity of visible foliar injury under dry conditions (U.S. EPA, 2014c, sections 5.4 and 5.7). As recognized in the PA, this area of uncertainty complicates characterization of the potential for visible foliar injury and its severity or extent of occurrence for given air quality conditions and thus complicates identification of air quality conditions that might be expected to provide a

This document is a prepublication version, signed by EPA Administrator, Gina McCarthy on 10/1/2015. We have taken steps to ensure the accuracy of this version, but it is not the official version.

specific level of protection from this effect (U.S. EPA, 2014c, sections 5.4 and 5.7). While noting the uncertainties associated with describing the potential for visible foliar injury and its severity or extent of occurrence for any given air quality conditions, the PA notes the occurrence of O_3-induced visible foliar injury in areas, including federally protected Class I areas that meet the current standard, and suggests it may be appropriate to consider revising the standard for greater protection. In so doing, however, the PA recognizes that the degree to which O_3-induced visible foliar injury would be judged important and potentially adverse to public welfare is uncertain (U.S. EPA, 2014c, section 5.7).

As noted in the proposal, with regard to other welfare effects, for which the ISA determined a causal or likely causal relationships with O_3 in ambient air, such as alteration of ecosystem water cycling and changes in climate, the PA concludes there are limitations in the available information that affect our ability to consider potential impacts of air quality conditions associated with the current standard.

Based on the considerations described in the PA, summarized in the proposal and outlined here, the PA concludes that the currently available evidence and exposure/risk information call into question the adequacy of the public welfare protection provided by the current standard and provide support for considering potential alternative standards to provide increased public welfare protection, especially for sensitive vegetation and ecosystems in federally protected Class I and similarly protected areas. In this conclusion, staff gives particular weight to the evidence indicating the occurrence in Class I areas that meet the current standard of cumulative seasonal O_3 exposures associated with estimates of tree growth impacts of a magnitude that may reasonably be considered important to public welfare.

b. CASAC Advice

This document is a prepublication version, signed by EPA Administrator, Gina McCarthy on 10/1/2015. We have taken steps to ensure the accuracy of this version, but it is not the official version.

The proposal also summarized advice offered by the CASAC in the current review, based on the updated scientific and technical record since the 2008 rulemaking. The CASAC stated that it "[supports] the conclusion in the Second Draft PA that the current secondary standard is not adequate to protect against current and anticipated welfare effects of ozone on vegetation" (Frey, 2014c, p. iii) and that the PA "clearly demonstrates that ozone-induced injury may occur in areas that meet the current standard" (Frey, 2014c, p. 12). The CASAC further stated "[w]e support the EPA's continued emphasis on Class I and other protected areas" (Frey, 2014c, p. 9). Additionally, the CASAC indicated support for the concept of ecosystem services "as part of the scope of characterizing damage that is adverse to public welfare" and "concur[red] that trees are important from a public welfare perspective because they provide valued services to humans, including aesthetic value, food, fiber, timber, other forest products, habitat, recreational opportunities, climate regulation, erosion control, air pollution removal, and hydrologic and fire regime stabilization" (Frey, 2014c, p. 9). Similar to comments from CASAC in the last review, and comments on the proposed reconsideration, the current CASAC also endorsed the PA discussions and conclusions on biologically relevant exposure metrics and the focus on the W126 index accumulated over a 12-hour period (8 a.m. – 8 p.m.) over the 3-month summation period of a year resulting in the maximum value (Frey, 2014c, p. iii).

In addition, CASAC stated that "relative biomass loss for tree species, crop yield loss, and visible foliar injury are appropriate surrogates for a wide range of damage that is adverse to public welfare," listing an array of related ecosystem services (Frey, 2014c, p. 10). With respect to RBL for tree species, CASAC states that it is appropriate to identify in the PA "a range of levels of alternative W126-based standards that include levels that aim for not greater than 2% RBL for the median tree species" and that a median tree species RBL of 6% is "unacceptably

This document is a prepublication version, signed by EPA Administrator, Gina McCarthy on 10/1/2015. We have taken steps to ensure the accuracy of this version, but it is not the official version.

high" (Frey, 2014c, pp. 13 and 14). With respect to crop yield loss, CASAC points to a benchmark of 5%, stating that a crop RYL for median species over 5% is "unacceptably high" and described crop yield as a surrogate for related services (Frey, 2014c, p. 13).

c. Administrator's Proposed Conclusions

At the time of proposal, the Administrator took into account the information available in the current review with regard to the nature of O_3-related effects on vegetation and the adequacy of protection provided by the current secondary standard. The Administrator recognized the appropriateness and usefulness of the W126 metric in evaluating O_3 exposures of potential concern for vegetation effects, additionally noting support conveyed by CASAC for such a use for this metric. Further, the Administrator took particular note of (1) the PA analysis of the magnitude of tree seedling growth effects (biomass loss) estimated for different cumulative, seasonal, concentration-weighted exposures in terms of the W126 metric; (2) the monitoring analysis in the PA of cumulative exposures (in terms of W126 index) occurring in locations where the current standard is met, including those locations in Class I areas, and associated estimates of tree seedling growth effects; and (3) the analyses in the WREA illustrating the geographic distribution of tree species for which E-R functions are available and estimates of O_3-related growth impacts for different air quality scenarios, taking into account the identified potential for the WREA's existing standard scenario to underestimate the highest W126-based O_3 values that would be expected to occur.

With regard to considering the adequacy of public welfare protection provided by the current secondary standard at the time of proposal, the Administrator focused first on welfare effects related to reduced native plant growth and productivity in terrestrial systems, taking note of the following: (a) the ISA conclusion of a causal relationship between O_3 in the ambient air

This document is a prepublication version, signed by EPA Administrator, Gina McCarthy on 10/1/2015. We have taken steps to ensure the accuracy of this version, but it is not the official version.

and these welfare effects, and supporting evidence related to O_3 effects on vegetation growth and productivity, including the evidence from OTC studies of tree seedling growth that support robust E-R functions for 11 species; (b) the evidence, described in section IV.D.1 of the proposal and summarized above, of the occurrence of cumulative seasonal O_3 exposures for which median species RBL estimates are of a magnitude that CASAC has termed "unacceptably high" in Class I areas during periods where the current standard is met; (c) actions taken by Congress to establish public lands that are set aside for specific uses intended to provide benefits to the public welfare, including lands that are to be protected so as to conserve the scenic value and the natural vegetation and wildlife within such areas for the enjoyment of future generations, such as national parks and forests, wildlife refuges, and wilderness areas (many of which have been designated Class I areas); and (d) PA conclusions that the current information calls into question the adequacy of the current standard, based particularly on impacts on tree growth (and the potential for associated ecosystem effects), estimated for Class I area conditions meeting the current standard, that are reasonably concluded to be important from a public welfare standpoint in terms of both the magnitude of the vegetation effects and the significance to public welfare of such effects in such areas.

At the time of proposal, the Administrator also recognized the causal relationships between O_3 in the ambient air and visible foliar injury, reduced yield and quality of agricultural crops, and alteration of below-ground biogeochemical cycles associated with effects on growth and productivity. As to visible foliar injury, she took note of the complexities and limitations in the evidence base regarding characterizing air quality conditions with respect to the magnitude and extent of risk for visible foliar injury, and she additionally recognized the challenges of associated judgments with regard to adversity of such effects to public welfare. In taking note of

This document is a prepublication version, signed by EPA Administrator, Gina McCarthy on 10/1/2015. We have taken steps to ensure the accuracy of this version, but it is not the official version.

the conclusions with regard to crops, she recognized the complexity of considering adverse O_3 impacts to public welfare due to the heavy management common for achieving optimum yields and market factors that influence associated services and additionally took note of the PA conclusions that placing emphasis on the protection afforded to trees inherently also recognizes a level of protection afforded for crops.

Based on her consideration of the conclusions in the PA, and with particular weight given to PA findings pertaining to tree growth-related effects, as well as with consideration of CASAC's conclusion that the current standard is not adequate, the Administrator proposed to conclude that the current standard is not requisite to protect public welfare from known or anticipated adverse effects and that revision is needed to provide the requisite public welfare protection, especially for sensitive vegetation and ecosystems in federally protected Class I areas and in other areas providing similar public welfare benefits. The Administrator further concluded that the scientific evidence and quantitative analyses on tree growth-related effects provide strong support for consideration of alternative standards that would provide increased public welfare protection beyond that afforded by the current O_3 secondary standard. She further noted that a revised standard would provide increased protection for other growth-related effects, including for carbon storage and for areas for which it is more difficult to determine public welfare significance, as recognized in section IV.B.2 of the proposal, as well as other welfare effects of O_3, including visible foliar injury and crop yield loss.

2. Comments on the Need for Revision

In considering comments on the need for revision, we first note the advice and recommendations from CASAC with regard to the adequacy of the current standard. In its review of the second draft PA, CASAC stated that it "supports the scientific conclusion in the

This document is a prepublication version, signed by EPA Administrator, Gina McCarthy on 10/1/2015. We have taken steps to ensure the accuracy of this version, but it is not the official version.

Second Draft PA that the current secondary standard is not adequate to protect against current and anticipated welfare effects of ozone on vegetation" (Frey, 2014c).

General comments received from the public on the proposal that are based on relevant factors and either supported or opposed the proposed decision to revise the current O_3 secondary standard are addressed in this section. Comments on specific issues or information that relate to consideration of the appropriate elements of a revised secondary standard are addressed below in section IV.C. Other specific comments related to standard setting, as well as general comments based on implementation-related factors that are not a permissible basis for considering the need to revise the current standard, are addressed in the Response to Comments document.

Public comments on the proposal were divided with regard to support for the Administrator's proposed decision to revise the current secondary standard. Many state and local environmental agencies or government bodies, tribal agencies and organizations, and environmental organizations agreed with the EPA's proposed conclusion on the need to revise the current standard, stating that the available scientific information shows that O_3-induced vegetation and ecosystem effects are occurring under air quality conditions allowed by the current standard and, therefore, provides a strong basis and support for the conclusion that the current secondary standard is not adequate. In support of their view, these commenters relied on the entire body of evidence available for consideration in this review, including evidence assessed previously in the 2008 review. These commenters variously pointed to the information and analyses in the PA and the conclusions and recommendations of CASAC as providing a clear basis for concluding that the current standard does not provide adequate protection of public welfare from O_3-related effects. Many of these commenters generally noted their agreement with the rationale provided in the proposal with regard to the Administrator's

This document is a prepublication version, signed by EPA Administrator, Gina McCarthy on 10/1/2015. We have taken steps to ensure the accuracy of this version, but it is not the official version.

proposed conclusion on adequacy of the current standard, and some gave additional emphasis to several aspects of that rationale, including the appropriateness of the EPA's attention to sensitive vegetation and ecosystems in Class I areas and other public lands that provide similar public welfare benefits and of the EPA's reliance on the strong evidence of impacts to tree growth and growth-related effects.

Comments from tribal organizations additionally noted that many Class I areas are of sacred value to tribes or provide treaty-protected benefits to tribes, including the exercise of gathering rights. Tribal organizations also noted the presence in Class I areas of large numbers of culturally important plant species, which they indicate to be impacted by air quality conditions allowed by the current standard. The impacts described include visible foliar injury, loss in forest growth and crop yield loss, which these groups describe as especially concerning when occurring on lands set aside for the benefit of the public or that are of sacred value to tribes or provide treaty-protected benefits to tribes.

As described in section IV.B.3 below, the EPA generally agrees with the view of these commenters regarding the need for revision of the current secondary standard and with CASAC that the evidence provides support for the conclusions that the current secondary standard is not adequate to protect public welfare from known or anticipated adverse effects, particularly with respect to effects on vegetation.

A number of industries, industry associations, or industry consultants, as well as some state governors, attorneys general and environmental agencies, disagreed with the EPA's proposed conclusion on the adequacy of the current standard and recommended against revision. In support of their position, these commenters variously stated that the available evidence is little changed from that available at the time of the 2008 decision, and that the evidence is too

This document is a prepublication version, signed by EPA Administrator, Gina McCarthy on 10/1/2015. We have taken steps to ensure the accuracy of this version, but it is not the official version.

uncertain, including with regard to growth-related effects and visible foliar injury, to support revision, and does not demonstrate adverse effects to public welfare for conditions associated with the current standard, with some commenters stating particularly that the EPA analysis of Class I areas did not document adverse effects to public welfare. They also cited the WREA modeling analyses as indicating that any welfare improvements associated with a revised standard would be marginal; in particular, compared to the benefits of achieving the current standard. Further, they state that, because of long-range transport of O_3 and precursors, it is not appropriate for the EPA to draw conclusions about the level of protection offered by the current standard based on current air quality conditions; in support of this view, these commenters point to different modeling analyses as demonstrating that under conditions where the current standard is met throughout the U.S., the associated W126 values would all be below the upper end of the range proposed as providing requisite public welfare protection and nearly all below the lower end of 13 ppm-hrs.

As an initial matter, we note that, as noted in sections I.B and IV.A above, the EPA's 2008 decision on the secondary standard was remanded back to the Agency because in setting the 2008 secondary standard, the EPA failed to specify what level of air quality was requisite to protect public welfare from known or anticipated adverse effects or explain why any such level would be requisite. So, in addressing the court remand, the EPA has more explicitly considered the extent to which protection is provided from known or anticipated effects that the Administrator may judge to be adverse to public welfare, and has described how the air quality associated with the revised standard would provide requisite public welfare protection, consistent with CAA section 109(b)(2) and the court's decision remanding the 2008 secondary standard. In undertaking this review, consistent with the direction of the CAA, the EPA has considered the

This document is a prepublication version, signed by EPA Administrator, Gina McCarthy on 10/1/2015. We have taken steps to ensure the accuracy of this version, but it is not the official version.

current air quality criteria.

While we recognize, as stated in the proposal, that the evidence newly available in this review is largely consistent with the evidence available at the time of the last review (completed in 2008) with regard to the welfare effects of O_3, we disagree with the commenters' interpretations of the evidence and analyses available in this review and with their views on the associated uncertainties. As summarized in section IV.A above, the ISA has determined causal relationships to exist between several vegetation and ecosystem endpoints and O_3 in ambient air (U.S. 2013, section 9.7). The ISA characterized the newly available evidence as largely consistent with and supportive of prior conclusions, as summarized in section IV.A above. This is not to say, however, that there is no newly available evidence and information in this review or that it is identical to that available in the last review. In some respects, the newly available evidence has strengthened the evidence available in the last review and reduced important uncertainties. As summarized in section IV.A.1.b above, newly available field studies confirm the cumulative effects and effects on forest community composition over multiple seasons. Additionally, among the newly available evidence for this review are analyses documented in the ISA that evaluate the RBL and RYL E-R functions for aspen and soybean, respectively, with experimental datasets that were not used in the derivation of the functions (U.S. 2014a, sections 9.6.3). These evaluations confirm the pertinence of the tree seedling RBL estimates for aspen, a species with sensitivity roughly midway in the range of sensitivities for the studied species, across multiple years in older trees. With regard to crops, the ISA evaluations demonstrate a robustness of the E-R functions to predict O_3-attributable RYL and confirm the relevance of the crop RYL estimates for more recent cultivars currently growing in the field. Together, the information newly available in this review confirms the basis for the E-R functions and

This document is a prepublication version, signed by EPA Administrator, Gina McCarthy on 10/1/2015. We have taken steps to ensure the accuracy of this version, but it is not the official version.

strengthens our confidence in interpretations drawn from their use in other analyses newly available in this review that have been described in the WREA and PA.

With regard to comments on uncertainties associated with estimates of RBL, we first note that these established, robust E-R functions, which the EPA gave particular emphasis in this review, are available for seedling growth for 11 tree species native to the U.S., as summarized in section IV.A.1.b above and described in the proposal. These E-R functions are based on studies of multiple genotypes of 11 tree species grown for up to three years in multiple locations across the U.S. (U.S. EPA, 2013, section 9.6.1). We have recognized the uncertainty regarding the extent to which the studied species encompass the O_3 sensitive species in the U.S. and also the extent to which they represent U.S. vegetation as a whole (U.S. EPA, 2014b, section 6.9). However, the studied species include both deciduous and coniferous trees with a wide range of sensitivities and species native to every region across the U.S. and in most cases are resident across multiple states and NOAA climatic regions (U.S. EPA, 2014b, Appendix 6A). While the CASAC stated that there is "considerable uncertainty in extrapolating from the [studied] forest tree species to all forest tree species in the U.S.," it additionally expressed the view that it should be anticipated that there are highly sensitive vegetation species for which we do not have E-R functions and others that are insensitive.[187] In so doing, the CASAC stated that it "should not be assumed that species of unknown sensitivity are tolerant to ozone" and "[i]t is more appropriate to assume that the sensitivity of species without E-R functions might be similar to the range of sensitivity for those species with E-R functions" (Frey, 2014c, p. 11). Accordingly, we disagree with commenters' view that effects on these species are not appropriate considerations for

[187] Use of RBL estimates in the proposal, and in this final decision, focuses on the RBL for the studied species as a surrogate for a broad array of growth-related effects of potential public welfare significance, consistent with the CASAC advice.

This document is a prepublication version, signed by EPA Administrator, Gina McCarthy on 10/1/2015. We have taken steps to ensure the accuracy of this version, but it is not the official version.

evaluation of the adequacy of the current standard.

In support of their view that RBL estimates are too uncertain to inform a conclusion that the current standard is not adequately protective of public welfare, some commenters state that some of the 11 E-R functions are based on as few as one study. The EPA agrees that there are two species for which there is only one study supporting the E-R function (Virginia pine and red maple). We also note, however, that those two species are appreciably less sensitive than the median (Lee and Hogsett, 1996; U.S. EPA, 2014c, Table 5C-1). Thus, in the relevant analyses, they tend to influence the median toward a relatively less (rather than more) sensitive response. Further, there are four species for which the E-R functions are based on more than five studies,[188] contrary to the commenters' claims of there being no functions supported by that many studies. That said, the EPA has noted the relatively greater uncertainty in the species for which fewer studies are available, and it is in consideration of such uncertainties that the EPA focused in the proposal on the median E-R function across the 11 species, rather than a function for a species much more (or less) sensitive than the median. The EPA additionally notes that it gave less emphasis to the E-R function available for one species, eastern cottonwood, based on CASAC advice that the study results supporting that E-R function were not as strong as the results of the other experiments that support the other, robust E-R functions and that the eastern cottonwood study results showed extreme sensitivity to O_3 compared to other studies (Frey, 2014c, p. 10). Accordingly, the EPA has appropriately considered the strength of the scientific evidence and the associated uncertainties in considering revision of the secondary standard.

[188] These four species, aspen, Douglas fir, ponderosa pine and red alder, range broadly in sensitivities that fall above, below and at the median for the 11 species (Lee and Hogsett, 1996; U.S. EPA, 2014c, Table 5C-1).

This document is a prepublication version, signed by EPA Administrator, Gina McCarthy on 10/1/2015. We have taken steps to ensure the accuracy of this version, but it is not the official version.

Other commenters stated that the scientific evidence does not support revising the NAAQS, pointing to uncertainty related to interpretation of the RBL estimates (based on tree seedling studies) with regard to effects on older tree lifestages. Some of these commenters' claim that mature canopy trees experience reduced O_3 effects. The EPA agrees that the quantitative information for O_3 growth effects on older tree lifestages is available for a more limited set of species than that available for tree seedlings. We note, however, that this is an area for which there is information newly available in this review. A detailed analysis of study data for seedlings and older lifestages of aspen shows close agreement between the O_3-attributable reduced growth observed in the older trees and reductions predicted from the seedling E-R function (U.S. EPA, 2013, section 9.6.3.2; discussed in the PA, section 5.2.1 as noted in the proposal, p. 75330). This finding, newly available in this review and documenting impacts on mature trees, improves our confidence in conclusions drawn with regard to the significance of RBL estimates for this species, which is prevalent across multiple regions of the U.S.[189] It is also noteworthy that this species is generally more sensitive to O_3 effects on growth than the median of the 11 species with robust E-R functions (as shown in U.S. EPA 2014c, Table 5C-1). Other newly available studies, summarized in section IV.A.1.b above and section IV.B.1.b of the proposal, provide additional evidence of O_3 impacts on mature trees, including a meta-analysis reporting older trees to be more affected by O_3 than younger trees (ISA, p. 9-42; Wittig et al., 2007). We additionally note that CASAC "concur[red] that biomass loss in trees is a relevant

[189] The WREA notes a few additional, limited analyses using modeling tools and data from previous publications that indicate there may be species-specific differences in the extent of similarities between seedling and adult growth response to O_3, with some species showing greater and some lesser response for seedlings as compared to mature tree, but a general comparability (U.S. EPA 2014b, section 6.2.1.1 and p. 6-67).

This document is a prepublication version, signed by EPA Administrator, Gina McCarthy on 10/1/2015. We have taken steps to ensure the accuracy of this version, but it is not the official version.

surrogate for damage to tree growth that affects ecosystem services such as habitat provision for wildlife, carbon storage, provision of food and fiber, and pollution removal" additionally stating that "[b]iomass loss may also have indirect process-related effects such as on nutrient and hydrologic cycles" leading them to conclude that "[t]herefore, biomass loss is a scientifically valid surrogate of a variety of adverse effects to public welfare" (Frey, 2014c, p. 10).

As noted in section IV.A above and discussed below, the Administrator's final decision on the adequacy of the current standard draws upon, among other things, the available evidence and quantitative analyses as well as judgments about the appropriate weight to place on the range of uncertainties inherent in the evidence and analyses. The strengthening in this review, as compared with the last review, of the basis for the robust E-R functions for tree seedling RBL, as well as other newly available quantitative analyses, will, accordingly, contribute to judgments made by the Administrator with regard to these effects in reaching her final decisions in this review.

Amongst the newly available information in this review is a new analysis describing W126-based exposures occurring in counties containing Class I areas for which monitoring data indicated compliance with the current standard. The PA gave particular attention to this analysis in consideration of the adequacy of the current standard, and this analysis was also described in the proposal (U.S. EPA, 2014c, Appendix 5B and pp. 5-27 to 5-29; 79 FR 75331-75332, December 17, 2014). Some of the commenters who disagreed with the EPA's conclusion on adequacy of the current standard variously stated that this analysis does not demonstrate growth effects are occurring in Class I areas and that the analysis is too uncertain for reliance on by the Administrator in her judgment on adequacy of the current standard. While the EPA agrees with commenters that data on the occurrence of growth effects in the areas and time periods identified

This document is a prepublication version, signed by EPA Administrator, Gina McCarthy on 10/1/2015. We have taken steps to ensure the accuracy of this version, but it is not the official version.

are not part of this analysis, we note that this is because such data have not been collected and consequently cannot be included. As a result, the EPA has utilized measurements of O_3 in or near these areas in combination with the established E-R functions to estimate the potential for growth impacts in these areas under conditions where the current standard is met. The EPA additionally notes that species for which E-R functions have been developed have been documented to occur within these areas (see Table 3).

The EPA disagrees with commenters regarding the appropriateness of this analysis for the Administrator's consideration. This analysis documents the occurrence of cumulative growing season exposures in these ecosystems which the EPA and CASAC have interpreted, through the use of the established E-R functions for tree seedling growth effects summarized in section IV.A.1.b above (and described in the ISA, PA and proposal), as indicating the potential for growth effects of significance in these protected areas. To the extent that these comments imply that the Administrator may only consider welfare effects that are certain in judging the adequacy of the current standard, we note that section 109(b)(2) of the CAA plainly provides for consideration of both known and anticipated adverse effects in establishing or revising secondary NAAQS.

In support of some commenters' view that this analysis is too uncertain to provide a basis for the Administrator's proposed conclusion that the current standard is not adequate, one commenter observed that the O_3 monitors used for six of the 22 Class I areas in the analysis, although in the same county, were sited outside of the Class I areas. This was the case due to the analysis being focused on the highest monitor in the county that met the current standard. To clarify the presentation, however, we have refocused the presentation, restricting it to data for

This document is a prepublication version, signed by EPA Administrator, Gina McCarthy on 10/1/2015. We have taken steps to ensure the accuracy of this version, but it is not the official version.

monitors sited in or within 15 kilometers of a Class I area,[190] and note that the results are little changed, continuing to call into question the adequacy of the current standard. As shown in Table 3, the dataset in the refocused presentation, which now spans 1998 up through 2013, includes 17 Class I areas for which monitors were identified in this manner. For context, we note that this represents nearly a quarter of the Class I areas for which there are O_3 monitors within 15 km.[191]

In recognition of the influence that other environmental factors can exert in the natural environment on the relationship between ambient O_3 exposures and RBL, potentially modifying the impact predicted by the E-R functions, the PA and proposal took particular note of the occurrence of 3-year average W126 index values at or above 19 ppm-hrs. In the re-focused analysis in Table 3, there are 11 areas, distributed across four states in two NOAA climatic regions, for which the 3-year W126 exposure index values ranged at or above 19 ppm-hrs, a value for which the corresponding median species RBL estimate for a growing season's exposure is 6%, a magnitude termed "unacceptably high" by CASAC (Frey, 2014c, p. 13). The highest 3-year W126 values in these 11 areas ranged from 19.0 up to 22.2 ppm-hrs, a cumulative seasonal exposure for which the median species RBL estimate is 9% for a single growing season. The annual W126 index values range above 19 ppm-hrs in 15 of the areas in the re-focused table provided here; these areas are distributed across six states (AZ, CA, CO, KY, SD, UT) and four

[190] The 15 km distance was selected as a natural breakpoint in distance of O_3 monitoring sites from Class I areas and as still providing similar surroundings to those occurring in the Class I area. We note that given the strict restrictions on structures and access within some of these areas, it is common for monitors intended to collect data pertaining to air quality in these types of areas to be sited outside their boundaries.

[191] There is an O_3 monitor within fewer than 15% of all Class I areas, and fewer than half of all Class I areas have a monitor within 15 km.

This document is a prepublication version, signed by EPA Administrator, Gina McCarthy on 10/1/2015. We have taken steps to ensure the accuracy of this version, but it is not the official version.

regions (West, Southwest, West North Central and Central).[192] The highest index values in the areas with annual index values above 19 ppm-hrs range from 19.1 to 26.9 ppm-hrs. As is to be expected from the focus on a smaller dataset, the number of states with 1-year W126 index values above 19 ppm-hrs is smaller in the refocused analysis (15 as compared to 20), although the number of regions affected is the same. More importantly, however, the number of areas with 3-year W126 index values at or above 19 ppm-hrs is the same, 11 Class I areas across two regions, supporting the prior conclusions.

[192] This compares to 20 areas in eight states and four regions in the earlier analysis.

This document is a prepublication version, signed by EPA Administrator, Gina McCarthy on 10/1/2015. We have taken steps to ensure the accuracy of this version, but it is not the official version.

Table 3. O_3 Concentrations for Class I Areas During Period From 1998 to 2013 that Met the Current Standard and Where 3-year Average W126 Index Value was at or Above 15 ppm-hrs

Class I Area (distance away, if monitor is not at/within boundaries)	**State / County**	**Design Value (ppb)***	**3-year Average W126 (ppm-hrs)*** (# ≥ 19 ppm-hrs, range)	**Annual W126 (ppm-hrs)*** (# ≥ 19 ppm-hrs, range)	**Number of 3-year Periods**
Bridger Wilderness Area [QA, DF] (8.9 km)	WY / Sublette	70-72	16.2-17.0	13.9-18.8	4
Canyonlands National Park [QA, DF, PP,]	UT / San Juan	70-73	15.4-19.5 (2, 19.1-19.5)	9.6-23.6 (4, 19.2-23.6)	8
Chiricahua National Monument [DF, PP] (12 km)	AZ / Cochise	69-73	15.2-19.8 (1, 19.8)	11.7-21.9 (2, 19.8-21.9)	10
Grand Canyon National Park [QA, DF, PP]	AZ / Coconino	68-74	15.3-22.2 (7, 19.1-22.2)	10.1-26.9 (6, 19.8-26.9)	12
Desolation Wilderness [PP] (3.9 km)	CA/ El Dorado	75	19.8 (1, 19.8)	15.6-22.9 (2, 21.0-22.9)	1
Lassen Volcanic National Park [DF, PP]	CA / Shasta	72-74	15.3-15.6	11.5-19.1 (1, 19.1)	2
Mammoth Cave National Park [BC, C, LP, RM, SM, VP, YP] (0.1 km)	KY / Edmonson	74	15.7	12.3-22.0 (1, 22.0)	1
Maroon Bells-Snowmass Wilderness Area [QA, DF] (0.8 km)	CO/Gunnison	68-73	15.6-20.2 (1, 20.2)	13.0-23.8 (3, 21.3-23.8)	8
Mazatzal Wilderness [DF, PP] (10.9 km)	AZ/Maricopa	74-75	17.8-19.9 (1, 19.9)	10.3-26.2 (3, 19.7-26.2)	2
Mesa Verde National Park [DF]	CO / Montezuma	67-73	15.4-20.7 (1, 20.7)	10.7-23.4 (4, 19.5-23.4)	11
Petrified Forest National Park [C]	AZ / Navajo	70	15.4-16.9	12.7-18.6	2
Rocky Mountain National Park [QA, DF, PP] (0.9 km)	CO / Larimer	73-74	15.3-18.4	8.3-26.2 (4, 19.4-26.2)	5
Saguaro National Park [DF, PP] (0.1 km)**	AZ / Pima	69-74	15.4-19.0 (1, 19.0)	7.3-22.9 (3, 19.6-22.9)	6
Superstition Wilderness Area [PP] (6.3, 14.9 km and 7.2 km)**	AZ/Gila	72-75	16.6-20.9 (2, 19.0-20.9)	13.8-25.5 (4, 19.0-25.5)	5
	AZ/Maricopa	70-75	15-20.2 (1, 20.2)	6.3-23.9 (4, 19.6-23.9)	4
	AZ/Pinal	72-75	15.3-21.1 (1, 21.1)	10.2-24.7 (4, 21.4-24.7)	7
Weminuche Wilderness Area [QA, DF, PP] (14.9 km)	CO / La Plata	70-74	15.1-19.1 (1, 19.1)	10.8-21.0 (2, 20.8-21.0)	6
Wind Cave National Park [QA, PP]	SD / Custer	70	15.4	12.3-20.5 (1, 20.5)	1
Zion National Park [QA, DF, PP] (3.6 km)	UT / Washington	70-73	17.0-20.1 (2, 19.4-20.1)	14.2-23.2 (3, 19.8-23.2)	6

* Based on hourly O_3 concentration data retrieved from AQS on June 25, 2014, and additional CASTNET data downloaded from http://java.epa.gov/castnet/epa_jsp/prepackageddata.jsp on June 25, 2014. Design values shown above are derived in accordance with Appendix P to 40 CFR Part 50. Annual W126 index values are derived as described in section IV.A.1 above; three consecutive year annual values are averaged for 3-year averages. Prior to presentation, both types of W126 values are rounded to one decimal place. The full list of monitoring site identifiers and individual statistics is available in the docket for this rulemaking.
** No monitor was sited within these Areas and multiple monitors were sited within 15 km. Data for the closest monitor per county are presented.
Superscript letters refer to species present for which E-R functions have been developed. QA=Quaking Aspen, BC=Black Cherry, C=Cottonwood, DF=Douglas Fir, LP=Loblolly Pine, PP=Ponderosa Pine, RM=Red Maple, SM=Sugar Maple, VP=Virginia Pine, YP=Yellow (Tulip) Poplar. Sources include USDA-NRCS (2014,http://plants.usda.gov), USDA-FS (2014, http://www.fs.fed.us/foresthealth/technology/nidrm2012.shtml) UM-CFCWI (2014,

This document is a prepublication version, signed by EPA Administrator, Gina McCarthy on 10/1/2015. We have taken steps to ensure the accuracy of this version, but it is not the official version.

http://www.wilderness.net/printFactSheet.cfm?WID=583), NPS (http://www.nps.gov/pefo/planyourvisit/upload/Common-Plants-Site-Bulletin-sb-2013.pdf) and Phillips and Comus (2000)

This document is a prepublication version, signed by EPA Administrator, Gina McCarthy on 10/1/2015. We have taken steps to ensure the accuracy of this version, but it is not the official version.

As support for their view that the Class I area analysis is too uncertain to provide a basis for the Administrator's proposed conclusion that the current standard is not adequate, some commenters stated that forests in Class I areas were composed of mature trees and that the tree seedling E-R functions do not predict growth impacts in mature forests. The EPA disagrees with the commenters' statement that Class I areas are only made up of mature trees. Seedlings exist throughout forests as part of the natural process of replacing aging trees and overstory trees affected by periodic disturbances.[193] Seedlings also tend to occur in areas affected by natural disturbances, such as fires, insect infestations and flooding, and such disturbances are common in many natural forests. As noted above, information newly available in this review strengthens our understanding regarding O_3 effects on mature trees for aspen, an important and O_3-sensitive species (U.S. EPA, 2013, section 9.6.3.2).

One commenter additionally stated that the EPA has not shown reduced biomass to be adverse to public welfare, variously citing individual studies, most of which are not considering O_3, as support for their view that such an effect of O_3 may not occur in the environment and may be of no significance if it does. With regard to the occurrence of O_3-related reduced growth in the field, we note the strength of the evidence from field OTC studies on which the E-R functions are based, and evidence from comparative studies with open-air chamberless control treatments suggests that characteristics particular to the OTC did not significantly affect plant response (U.S. EPA, 2013, p. 9-5). Thus, we view the OTC systems as combining aspects of controlled exposure systems with field conditions to facilitate a study providing data that represent the role of the studied pollutant in a natural system.

[193]Basic information on forest process, including the role of seedlings is available at: http://www.na.fs.fed.us/stewardship/pubs/NE_forest_regeneration_handbook_revision_130829_desktop.pdf.

Further, we disagree with the commenters on the significance of O_3-attributable reduced growth in natural ecosystems. Even in the circumstances cited by the commenter (e.g., subsequent to large-scale disturbances, nutrient limited system, multigeneration exposure), O_3 can affect growth of seedlings and older trees, with the potential for effects on ecosystem productivity, handicapping the sensitive species and affecting community dynamics and associated community composition, as well as ecosystem hydrologic cycles (U.S. EPA, 2013, p. 1-8). For example, two recent studies report on the role of O_3 exposure in affecting water use in a mixed deciduous forest and indicated that O_3 increased water use in the forest and also reduced growth rate (U.S. EPA, 2013, p. 9-43, McLaughlin, 2007a, 2007b). Contrary to the lesser effects implied by the commenters, the authors of these two studies noted implications of their findings with regard to the potential for effects to be amplified under conditions of increased temperature and associated reduced water availability (McLaughlin, 2007a). We additionally note comments from the CASAC, summarized above, in which it concurs with a focus on biomass loss and the use of RBL estimates, calling biomass loss in trees a "relevant surrogate for damage to tree growth" that affects an array of ecosystem services (Frey, 2014c, p. 10), and identifies 6% RBL as "unacceptably high" (Frey, 2014c, p. 13). The evidence we presented includes evidence related to RBL estimates above that benchmark. Thus, while we agree that some reductions in tree growth may not be concluded to be adverse to public welfare, we disagree with commenters that we have not presented the evidence, which includes RBL estimates well above the 6% magnitude identified by CASAC, that supports the Administrator's judgments on adversity that may be indicated by such estimates and her conclusion that adequate protection is not provided by the current standard, as described in section IV.B.3 below.

Some commenters disagree with the EPA's consideration of the Class I areas analysis,

stating that it is not appropriate for the EPA to evaluate the level of protection offered by the current primary O_3 standard under current conditions due to the long-range transport of O_3 and O_3 precursors to Class I areas from upwind non-attainment areas. It is the view of these commenters that once the upwind areas make emissions reductions to attain the current standard, downwind areas will see improvements in air quality and decreasing W126 levels. In support of this view, commenters point to several modeling analyses. Some commenters point to air quality modeling conducted by an environmental consultant that projects all sites to have W126 index values below 13 ppm-hrs when emissions are adjusted such that all upwind monitors are modeled to meet the current standard. Detailed methodology, results and references for the commenter's modeling analysis were not provided, precluding a thorough evaluation and comparison to the EPA's modeling. While the EPA agrees that transport of O_3 and O_3 precursors can affect downwind monitors, we disagree with commenters regarding the conclusions that are appropriate to draw from modeling simulations for the reasons noted below.

As support for their view that the current standard provides adequate protection, some commenters pointed to estimates drawn from the EPA's air quality modeling performed for the RIA, stating that this modeling for an alternative standard level of 70 ppb indicates "only a handful" of monitoring sites approaching as high as 13 ppm-hrs as a 3-year average (e.g., UARG, p. 76). These commenters further point to the WREA modeling, noting that those estimates project that attainment of the current standard would result in only 5 sites above 15 ppm-hrs. Based on these statements, these commenters state that the current standard is likely to provide conditions with no site having a monitor over 17 ppm-hrs and a "minimal number" likely exceeding 13 ppm-hrs (e.g., UARG, p. 77). We disagree with commenters' interpretation of the modeling information from the two different assessments. As we summarized in section

IV.C.1 of the proposal with regard to the WREA modeling, the modeling estimates are each based on a single set of precursor emissions reductions that are estimated to achieve the desired target conditions, which is also the case for the RIA modeling[194] (U.S. EPA, 2014c, pp. 5-40 to 5-41; see also section 1.2.2 of the 2014 RIA).

As noted in section IV.A.2 above, and in the proposal, the model-adjusted air quality in the WREA scenario for the current standard does not represent an optimized control scenario that just meets the current standard, but rather characterizes one potential distribution of air quality across a region when all monitor locations meet the standard (79 FR 75322; U.S. EPA, 2014b, section 4.3.4.2). Alternate precursor emissions reductions would be expected to produce different patterns of O_3 concentrations and associated differences in W126 index values. Specifically, the precursor emissions reductions scenarios examined in the WREA focuses on regional reductions over broad areas rather than localized cuts that may focus more narrowly on areas violating the current standard (U.S. EPA, 2014b, p. 4-35). The assumption of regionally determined across-the-board emissions reductions is a source of potential uncertainty with the potential to overestimate W126 scenario benefits (U.S. EPA, 2014b, Table 4-5 [row G]). The application of emissions reductions to all locations in each region to bring down the highest monitor in the region to meet the current standard could potentially lead to W126 index underestimates at some locations, as noted in the WREA: "[w]hile the scenarios implemented in this analysis show that [] bringing down the highest monitor in a region would lead to reductions below the targeted

[194] Although commenters cite to both analyses as if providing the same information, there are many differences in specific aspects of the RIA approach from that of the WREA, which derive, at least in part, from their very different purposes. The RIA is not developed for consideration in the NAAQS review. Rather, it is intended to provide insights and analysis of an illustrative control strategy that states might adopt to meet the revised standard. The EPA does not consider this analysis informative to consideration of the protection provided by the current standard, and the results of the RIA have not been considered in the EPA's decisions on the O_3 standards.

level through the rest of the region, to the extent that the regional reductions from on-the-books controls are supplemented with more local controls the additional benefit may be overestimated" (U.S. EPA, 2014b, p. 4-36; U.S. EPA, 2014c, pp. 5-40 to 5-41). This point was emphasized by CASAC in their comments on the 2nd draft WREA. CASAC noted that, "[m]eeting a target level at the highest monitor requires substantial reductions below the targeted level through the rest of the region" and stated that "[t]his artificial simulation does not represent an actual control strategy and may conflate differences in control strategies required to meet different standards" (Frey, 2014b, p. 2).

Due to the uncertainty about what actual future emissions control strategies might be and their associated emissions reductions, and the impact such uncertainty might have on modeling estimates involving reductions from recent conditions, we believe it is important to place weight on ambient air monitoring data for recent conditions in drawing conclusions regarding W126 index values that would be expected in areas that meet the current standard. The analysis of air quality data for Class I areas described in the proposal, and updated in Table 3 above (1998-2013), indicates the occurrence of 3-year W126 exposure index values well above 19 ppm-hrs, a cumulative exposure value for which CASAC termed the associated median RBL estimate "unacceptably high," in multiple Class I areas that meet the current standard (79 FR 75312, December 17, 2014, Table 7; updated in Table 3 above). Additionally, analysis of recent air quality data (2011-2013) for all locations across the U.S. indicates 10 monitor locations distributed across two NOAA climatic regions that meet the current standard and at which 3-year W126 index values are above 19 ppm-hrs, with the highest values extending up to 23 ppm-hrs (Wells, 2015b).

In support of their view that the EPA's modeling supports the conclusion that W126

index values of interest are achieved under the current secondary standard, some commenters additionally state that the W126 values in the WREA are overestimated in unmonitored rural areas due to the much greater prevalence of urban monitors across the U.S. The EPA disagrees with this conclusion. In order to estimate O_3 concentrations in grid cells across a national-scale spatial surface, the WREA applied the VNA spatial interpolation technique after applying the HDDM technique to adjust O_3 concentrations at monitoring sites based on the emissions reductions necessary to just meet the current standard. In estimating concentrations in unmonitored areas, the VNA method considers only the "neighboring" monitors, using an inverse distance squared weighting formula, which assigns the greatest influence to the nearest neighboring monitor (U.S. EPA, 2014b, p. 4A-6). By this approach, monitors in less-densely monitored areas contribute to the concentration estimates over much larger areas than do monitors in more-densely monitored areas. In an urban area, neighboring monitors may be quite close to one another, such that any one monitor may only be influencing concentration estimates for a handful of spatial grid cells in the immediate vicinity. By contrast, monitors in rural areas may influence hundreds of grid cells. A specific example of this is the monitor in Great Basin National Park in eastern Nevada. The VNA algorithm assigns very high weights to this monitor for all of the grid cells covering a 100 km radius around it, simply because there are no other monitors in that area and it is the closest. On the other hand, a monitor near downtown Las Vegas may only get a high weight for, and thus exert influence on the concentration estimate in, the one grid cell containing it. We agree with the commenter that urban monitors may influence the spatial surface for some distance away from the urban areas, although the influence wanes with increasing distance from that area and decreasing distance to the next closest monitor. As we lack data for the intervening locations, however, we have no reason to conclude that the VNA

surface is overestimating the W126 values. Further, as was summarized in section IV.A.2 above, and in the WREA, the PA and the proposal (U.S. EPA, 2014b, Table 6-27, section 8.5; U.S. EPA, 2014c, p. 5-49; 79 FR 75323, December 17, 2014), the VNA approach results in a lowering of the highest W126 values at monitoring sites, which contributes to underestimates of the *highest* W126 values in each region.

In support of their view that the current standard is adequate, some industry commenters additionally cite WREA analyses for the current standard scenario, including the W126 index estimates in national parks, as showing that the current standard provides more than adequate protection, with alternative scenarios providing only marginal and increasingly uncertain benefits. As we noted in the proposal and section IV.A.2 above, there are an array of uncertainties associated with the W126 index estimates, in the current standard scenario and in the other scenarios, which, as they are inputs to the vegetation risk analyses, are propagated into those analyses (79 FR 75323; December 17, 2014). As a result, consistent with the approach in the proposal, the Administrator has not based her decision with regard to adequacy of the current standard in this review on these air quality scenario analyses.

In support of their view that the current standard provides adequate protection and should not be revised, some commenters described their concerns with any consideration of visible foliar injury in the decision regarding the secondary standard. These commenters variously stated that visible foliar injury cannot be reliably evaluated for adversity given lack of available information, is not an adverse effect on public welfare that must be addressed through a secondary standard, and is not directly relatable to growth suppression (and the EPA's use of RBL captures that effect anyway). Additionally, some state that any associated ecosystem services effects are not quantifiable. In sum, the view of these commenters is that it is not

appropriate for the Administrator to place any weight on this O_3 effect in determining the adequacy of the current standard. As an initial matter, the EPA agrees with the comment that the current evidence does not include an approach for relating visible foliar injury to growth suppression,[195] as recognized in section IV.A.2 above. Further, we note that, similar to decisions in past O_3 reviews, the Administrator's proposed decision in this review recognized the "complexities and limitations in the evidence base regarding characterizing air quality conditions with respect to the magnitude and extent of risk for visible foliar injury" and the "challenges of associated judgments with regard to adversity of such effects to public welfare" (79 FR 75336; December 17, 2014). Contrary to the implications of the commenters, although the Administrator took into consideration the potential for adverse effects on public welfare from visible foliar injury, she placed weight primarily on growth-related effects of O_3, both in her proposed decision on adequacy and with regard to proposed judgments on what revisions would be appropriate. Although visible foliar injury may impact the public welfare and accordingly has the potential to be adverse to the public welfare (as noted in section IV.B.2 of the proposal), the Administrator placed less weight on visible foliar injury considerations in identifying what revisions to the standard would be appropriate to propose. In considering these effects for this purpose, she recognized "significant challenges" in light of "the variability and the lack of clear quantitative relationship with other effects on vegetation, as well as the lack of established

[195] The current evidence indicates that"[t]he significance of O_3 injury at the leaf and whole plant levels depends on how much of the total leaf area of the plant has been affected, as well as the plant's age, size, developmental stage, and degree of functional redundancy among the existing leaf area" and "in some cases, visible foliar symptoms have been correlated with decreased vegetative growth … and with impaired reproductive function" (U.S. EPA, 2013, p. 9-39). The ISA concludes, however, "it is not presently possible to determine, with consistency across species and environments, what degree of injury at the leaf level has significance to the vigor of the whole plant" (U.S. EPA, 2013, p. 9-39).

criteria or objectives that might inform consideration of potential public welfare impacts related to this vegetation effect" (79 FR 75349; December 17, 2014). As summarized in section IV.A.1.a above, the evidence demonstrates a causal relationship of O_3 with visible foliar injury. Accordingly, we note that the uncertainty associated with visible foliar injury is not with regard to whether O_3 causes visible foliar injury. Rather, the uncertainty is, as discussed in sections IV.A.1.b and IV.A.3 above, with the lack of established, quantitative exposure-response functions that document visible foliar injury severity and incidence under varying air quality and environmental conditions and information to support associated judgments on the significance of such responses with regard to associated public welfare impacts. As with the Administrator's proposed decisions on the standard, such considerations also informed her final decisions, described in sections IV.B.3 and IV.C.3 below.

In support of their view that the current standard should be retained, some commenters note the WREA finding for the current standard scenario of no U.S. counties with RYL estimates at or above 5%, the RYL value emphasized by CASAC and state that policy reasons provide support for not focusing on crops in the decision; other commenters state that additional studies on crops and air quality are needed. As described previously in this section, and in section IV.A.2 above, an aspect of uncertainties associated with the WREA air quality scenarios, including the current standard scenario, is underestimation of the highest W126 index values, contributing to underestimates in the effects associated with the current standard scenario. The EPA agrees with commenters that additional studies on crops and air quality will be useful to future reviews. Additionally, however, as noted above, the Administrator's proposed conclusion on adequacy of the current standard, as well as her final decision described in section IV.B.3 below, gives less weight to consideration of effects on agricultural crops in recognition of the

complicating role of heavy management in that area.

Lastly, we note that many commenters cited the costs of compliance as supporting their view that the standard should not be revised, although as we have described in section I.B above, the EPA may not consider the costs of compliance in determining what standard is requisite to protect public welfare from known or anticipated adverse effects.

3. Administrator's Conclusions on the Need for Revision

Having carefully considered the advice from CASAC and public comments, as discussed above, the Administrator believes that the fundamental scientific conclusions on the welfare effects of O_3 in ambient air reached in the ISA and summarized in the PA and in section IV.B of the proposal remain valid. Additionally, the Administrator believes the judgments she reached in the proposal (section IV.D.3) with regard to consideration of the evidence and quantitative assessments and advice from CASAC remain appropriate. Thus, as described below, the Administrator concludes that the current secondary standard is not requisite to protect public welfare from known and anticipated adverse effects associated with the presence of O_3 in the ambient air and that revision is needed to provide additional protection.

In considering the adequacy of the current secondary O_3 standard, the Administrator has carefully considered the available evidence, analyses and conclusions contained in the ISA, including information newly available in this review; the information, quantitative assessments, considerations and conclusions presented in the PA; the advice and recommendations from CASAC; and public comments. The Administrator gives primary consideration to the evidence of growth effects in well-studied tree species and information, presented in the PA and represented with a narrower focus in section IV.C.2 above, on cumulative exposures occurring in Class I areas when the current standard is met. This information indicates the occurrence of

exposures associated with Class I areas during periods when the current standard is met for which associated estimates of growth effects, in terms of the tree seedling RBL in the median species for which E-R functions have been established, extend above a magnitude considered to be "unacceptably high" by CASAC. This analysis estimated such cumulative exposures occurring under the current standard for nearly a dozen areas, distributed across two NOAA climatic regions of the U.S. The Administrator gives particular weight to this analysis, given its focus in Class I areas. Such an emphasis on lands afforded special government protections, such as national parks and forests, wildlife refuges, and wilderness areas, some of which are designated Class I areas under the CAA, is consistent with such emphasis in the 2008 revision of the secondary standard (73 FR 16485, March 27, 2008). As noted in section IV.A above, Congress has set such lands aside for specific uses that are intended to provide benefits to the public welfare, including lands that are to be protected so as to conserve the scenic value and the natural vegetation and wildlife within such areas, and to leave them unimpaired for the enjoyment of future generations. The Administrator additionally recognizes that states, tribes and public interest groups also set aside areas that are intended to provide similar benefits to the public welfare for residents on those lands, as well as for visitors to those areas.

As noted in prior reviews, judgments regarding effects that are adverse to public welfare consider the intended use of the ecological receptors, resources and ecosystems affected. Thus, the Administrator recognizes that the median RBL estimate for the studied species is a quantitative tool within a larger framework of considerations pertaining to the public welfare significance of O_3 effects on the public welfare. Such considerations include effects that are associated with effects on growth and that the ISA has determined to be causally or likely causally related to O_3 in ambient air, yet for which there are greater uncertainties affecting our

estimates of impacts on public welfare. These other effects include reduced productivity in terrestrial ecosystems, reduced carbon sequestration in terrestrial ecosystems, alteration of terrestrial community composition, alteration of below-grown biogeochemical cycles, and alteration of terrestrial ecosystem water cycles, as summarized in section IV.A.1.b. Thus, in her attention to CASAC's characterization of a 6% estimate for tree seedling RBL in the median studied species as "unacceptably high", the Administrator, while mindful of uncertainties with regard to the magnitude of growth impact that might be expected in mature trees, is also mindful of related, broader, ecosystem-level effects for which our tools for quantitative estimates are more uncertain and those for which the policy foundation for consideration of public welfare impacts is less well established. She finds her consideration of tree growth effects consistent with CASAC advice regarding consideration of O_3-related biomass loss as a surrogate for the broader array of O_3 effects at the plant and ecosystem levels.

The Administrator also recognizes that O_3-related effects on sensitive vegetation can occur in other areas that have not been afforded special federal protections, including effects on vegetation growing in managed city parks and residential or commercial settings, such as ornamentals used in urban/suburban landscaping or vegetation grown in land use categories that are heavily managed for commercial production of commodities such as timber. In her consideration of the evidence and quantitative information of O_3 effects on crops, the Administrator recognizes the complexity of considering adverse O_3 impacts to public welfare due to the heavy management common for achieving optimum yields and market factors that influence associated services. In so doing, she notes that her judgments that place emphasis on the protection of forested ecosystems inherently also recognize a level of protection for crops. Additionally, for vegetation used for residential or commercial ornamental purposes, the

Administrator believes that there is not adequate information specific to vegetation used for those purposes, but notes that a secondary standard revised to provide protection for sensitive natural vegetation and ecosystems would likely also provide some degree of protection for such vegetation.

The Administrator also takes note of the long-established evidence of consistent association of the presence of visible foliar injury with O_3 exposure and the currently available information that indicates the occurrence of visible foliar injury in sensitive species of vegetation during recent air quality in public forests across the U.S. She additionally notes the PA conclusions regarding difficulties in quantitatively relating visible foliar injury symptoms to vegetation effects such as growth or related ecosystem effects. As at the time of the last review, the Administrator believes that the degree to which such effects should be considered to be adverse depends on the intended use of the vegetation and its significance. The Administrator also believes that the significance of O_3-induced visible foliar injury depends on the extent and severity of the injury and takes note of studies in the evidence base documenting increased severity and/or prevalence with higher O_3 exposures. However, the Administrator takes note of limitations in the available information with regard to judging the extent to which the extent and severity of visible foliar injury occurrence associated with conditions allowed by the current standard may be considered adverse to public welfare.

Based on these considerations, and taking into consideration the advice and recommendations of CASAC, the Administrator concludes that the protection afforded by the current secondary O_3 standard is not sufficient and that the standard needs to be revised to provide additional protection from known and anticipated adverse effects to public welfare, related to effects on sensitive vegetation and ecosystems, most particularly those occurring in

Class I areas. The Administrator additionally recognizes that states, tribes and public interest groups also set aside areas that are intended to provide similar benefits to the public welfare for residents on those lands, as well as for visitors to those areas. Given the clear public interest in and value of maintaining these areas in a condition that does not impair their intended use, and the fact that many of these areas contain O_3-sensitive vegetation, the Administrator further concludes that it is appropriate to revise the secondary standard in part to provide increased protection against O_3-caused impairment to vegetation and ecosystems in such areas, which have been specially protected to provide public welfare benefits. She further notes that a revised standard would provide increased protection for other growth-related effects, including for crop yield loss, reduced carbon storage and for areas for which it is more difficult to determine public welfare significance, as recognized in section IV.A.3 above, as well other welfare effects of O_3, such as visible foliar injury.

C. Conclusions on Revision of the Secondary Standard

The elements of the standard – indicator, averaging time, form, and level – serve to define the standard and are considered collectively in evaluating the welfare protection afforded by the secondary standard. Section IV.C.1 below summarizes the basis for the proposed revision. Significant comments received from the public on the proposal are discussed in section IV.C.2 and the Administrator's final decision on revisions to the secondary standard is described in section IV.C.3.

1. Basis for Proposed Revision

At the time of proposal, in considering what revisions to the secondary standard would be appropriate, the Administrator considered the ISA conclusions regarding the weight of the evidence for a range of welfare effects associated with O_3 in ambient air and associated areas of

uncertainty; quantitative risk and exposure analyses in the WREA for different adjusted air quality scenarios and associated limitations and uncertainties; staff evaluations of the evidence, exposure/risk information and air quality information in the PA; additional air quality analyses of relationships between air quality metrics based on form and averaging time of the current standards and a cumulative seasonal exposure index; CASAC advice; and public comments received as of that date in the review. In the paragraphs below, we summarize the proposal presentation with regard to key aspects of the PA considerations, advice from the CASAC, air quality analyses of different air quality metrics and the Administrator's proposed conclusions, drawing from section IV.E of the proposal.

a. Considerations and Conclusions in the PA

As summarized in the proposal, in identifying alternative secondary standards appropriate to consider in this review, the PA focused on standards based on a cumulative, seasonal, concentration-weighted form consistent with the CASAC advice in the current and last review. Based on conclusions of the ISA, as also summarized in section IV.A above, the PA considered a cumulative, seasonal, concentration-weighted exposure index to provide the most scientifically defensible approach for characterizing vegetation response to ambient O_3 and comparing study findings, as well as for defining indices for vegetation protection, as summarized in the proposal section IV.E.2.a. With regard to the appropriate index, the PA considered the evidence for a number of different such indices, as described in the proposal, and noted the ISA conclusion that the W126 index has some important advantages over other similarly weighted indices. The PA additionally considered the appropriate diurnal and seasonal exposure periods in a given year by which to define the seasonal W126 index and based on the evidence in the ISA and CASAC advice, as summarized in the proposal, decided on the 12-hour daylight window (8:00 a.m. to

8:00 p.m.) and the 3-consecutive-month period providing the maximum W126 index value.

Based on these considerations, the PA concluded it to be appropriate to retain the current indicator of O_3 and to consider a secondary standard form that is an average of the seasonal W126 index values (derived as described in section IV.A.1.c above) across three consecutive years (U.S. EPA, 2014c, section 6.6). In so doing, the PA recognized that there is limited information to discern differences in the level of protection afforded for cumulative growth-related effects by potential alternative W126-based standards of a single-year form as compared to a 3-year form (U.S. EPA, 2014c, pp. 6-30). The PA concluded a 3-year form to be appropriate for a standard intended to provide the desired level of protection from longer-term effects, including those associated with potential compounding, and that such a form might be concluded to contribute to greater stability in air quality management programs, and thus, greater effectiveness in achieving the desired level of public welfare protection than might result from a single-year form. (U.S. EPA, 2014c, section 6.6).

As summarized in the proposal, the PA noted that, due to the variability in the importance of the associated ecosystem services provided by different species at different exposures and in different locations, as well as differences in associated uncertainties and limitations, it is essential to consider the species present and their public welfare significance, together with the magnitude of the ambient concentrations in drawing conclusions regarding the significance or magnitude of public welfare impacts. Therefore, in development of the PA conclusions, staff took note of the complexity of judgments to be made by the Administrator regarding the adversity of known and anticipated effects to the public welfare and recognized that the Administrator's ultimate judgments on the secondary standard will most appropriately reflect an interpretation of the available scientific evidence and exposure/risk information that neither

overstates nor understates the strengths and limitations of that evidence and information. In considering an appropriate range of levels to consider for an alternative standard, the PA primarily considered tree growth, crop yield loss, and visible foliar injury, as well as impacts on the associated ecosystem services, while noting key uncertainties and limitations.

In specifically evaluating exposure levels, in terms of the W126 index, as to their appropriateness for consideration in this review with regard to providing the desired level of vegetation protection for a revised secondary standard, the PA focused particularly on RBL estimates for the median across the 11 tree species for which robust E-R functions are available. Table 4 below presents these estimates (U.S. EPA, 2014c, Appendix 5C, Table 5C-3; also summarized in Table 8 of the proposal). In so doing and recognizing the longstanding, strong evidence base supporting these relationships, the PA also noted uncertainties regarding inter-study variability for some species, as well as with regard to the extent to which tree seedling E-R functions can be used to represent mature trees. As summarized in the proposal, the PA conclusions on a range of W126 levels appropriate to consider are based on specific advice from CASAC with regard to median tree seedling RBL estimates that might be considered unacceptably high (6%), as well as its judgment on a RBL benchmark (2%) for identification of the lower end of a W126 index value range for consideration that might give more emphasis to the more sensitive tree seedlings (Frey, 2014c, p. 14).[196]

Table 4. Tree Seedling Biomass Loss and Crop Yield Loss Estimated for O_3 Exposure Over a Season

	Tree seedling biomass loss[A]	**Crop yield loss[B]**

[196] The CASAC provided several comments related to 2% RBL for tree seedlings both with regard to its use in summarizing WREA results and with regard to consideration of the potential significance of vegetation effects, as summarized in sections IV.D.2 and IV.E.3 of the proposal.

W126 index value for exposure period	Median Value	Individual Species	Median Value	Individual Species
23 ppm-hrs	Median species w. 7.6% loss	≤ 2% loss: 3/11 species ≤ 5% loss: 4/11 species ≤10% loss: 8/11 species ≤15% loss: 10/11 species >40% loss: 1/11 species	Median species w. 8.8 % loss	≤ 5% loss: 4/10 species >5,<10% loss: 1/10 species >10,<20% loss: 4/10 species >20: 1/10 species
22 ppm-hrs	Median species w. 7.2% loss	≤ 2% loss: 3/11 species ≤ 5% loss: 4/11 species ≤10% loss: 7/11 species ≤15% loss: 10/11 species >40% loss: 1/11 species	Median species w. 8.2% loss	≤ 5% loss: 4/10 species >5,<10% loss: 1/10 species >10,<20% loss: 4/10 species >20: 1/10 species
21 ppm-hrs	Median species w. 6.8% loss	≤ 2% loss: 3/11 species ≤ 5% loss: 4/11 species ≤10% loss: 7/11 species ≤15% loss: 10/11 species >40% loss: 1/11 species	Median species w. 7.7% loss	≤ 5% loss: 4/10 species >5,<10% loss: 3/10 species >10,<20% loss: 3/10 species
20 ppm-hrs	Median species w. 6.4% loss	≤ 2% loss: 3/11 species ≤ 5% loss: 5/11 species ≤10% loss: 7/11 species ≤15% loss: 10/11 species >40% loss: 1/11 species	Median species w. 7.1% loss	≤ 5% loss: 5/10 species >5,<10% loss: 3/10 species >10,<20% loss: 2/10 species
19 ppm-hrs	Median species w. 6.0% loss	≤ 2% loss: 3/11 species ≤5% loss: 5/11 species ≤10% loss: 7/11 species ≤15% loss: 10/11 species >30% loss: 1/11 species	Median species w. 6.4% loss	≤ 5% loss: 5/10 species >5, <10% loss: 3/10 species >10,<20% loss: 2/10 species
18 ppm-hrs	Median species w. 5.7% loss	≤ 2% loss: 5/11 species ≤ 5% loss: 5/11 species ≤10% loss: 7/11 species ≤15% loss: 10/11 species >30% loss: 1/11 species	Median species w. 5.7% loss	≤ 5% loss: 5/10 species >5,<10% loss: 3/10 species >10,<20% loss: 2/10 species
17 ppm-hrs	Median species w. 5.3% loss	≤ 2% loss: 5/11 species ≤5% loss: 5/11 species ≤10% loss: 9/11 species ≤15% loss: 10/11 species >30% loss: 1/11 species	Median species w. 5.1% loss	≤ 5% loss: 5/10 species >5, <10% loss: 3/10 species >10,<20% loss: 2/10 species
16 ppm-hrs	Median species w. 4.9% loss	≤ 2% loss: 5/11 species ≤ 5% loss: 6/11 species ≤10% loss: 10/11 species >30% loss: 1/11 species	Median species w. ≤5.0% loss	≤ 5% loss: 5/10 species >5,<10% loss: 4/10 species >10,<20% loss: 1/10 species
15 ppm-hrs	Median species w. 4.5% loss	≤ 2% loss: 5/11 species ≤5% loss: 6/11 species ≤10% loss: 10/11 species >30% loss: 1/11 species	Median species w. ≤5.0% loss	≤ 5% loss: 6/10 species >5, <10% loss: 4/10 species

14 ppm-hrs	Median species w. 4.2% loss	≤ 2% loss: 5/11 species ≤ 5% loss: 6/11 species ≤10% loss: 10/11 species >30% loss: 1/11 species	Median species w. ≤5.0% loss	≤ 5% loss: 6/10 species >5,<10% loss: 4/10 species
13 ppm-hrs	Median species w. 3.8% loss	≤ 2% loss: 5/11 species <5% loss: 7/11 species <10% loss: 10/11 species >20% loss: 1/11 species	Median species w. ≤5.0% loss	≤ 5% loss: 6/10 species >5, <10% loss: 4/10 species
12 ppm-hrs	Median species w. 3.5% loss	≤ 2% loss: 5/11 species ≤ 5% loss: 8/11 species ≤10% loss: 10/11 species >20% loss: 1/11 species	Median species w. ≤5.0% loss	≤ 5% loss: 8/10 species >5,<10% loss: 2/10 species
11 ppm-hrs	Median species w. 3.1% loss	≤ 2% loss: 5/11 species ≤5% loss: 8/11 species ≤10% loss: 10/11 species >20% loss: 1/11 species	Median species w. ≤5.0% loss	≤ 5% loss: 9/10 species >5, <10% loss: 1/10 species
10 ppm-hrs	Median species w. 2.8% loss	≤ 2% loss: 5/11 species ≤ 5% loss: 9/11 species <10% loss: 10/11 species >20% loss: 1/11 species	Median species w. ≤5.0% loss	≤ 5% loss: 9/10 species >5,<10% loss: 1/10 species
9 ppm-hrs	Median species w. 2.4% loss	≤ 2% loss: 5/11 species ≤ 5% loss: 10/11 species >20% loss: 1/11 species	Median species w. ≤5.0% loss	≤ 5% loss: all species
8 ppm-hrs	Median species w. 2.0% loss	≤ 2% loss: 5/11 species ≤ 5% loss: 10/11 species >15% loss: 1/11 species	Median species w. ≤5.0% loss	≤ 5% loss: all species
7 ppm-hrs	Median species w. <2.0% loss	≤ 2% loss: 7/11 species ≤5% loss: 10/11 species >15% loss: 1/11 species	Median species w. ≤5.0% loss	≤ 5% loss: all species

[A] Estimates here are based on the E-R functions for 11 species described in the WREA, section 6.2 and discussed in the PA, section 5.2.1. The cottonwood was excluded to address CASAC comments (Frey, 2014c; U.S. EPA, 2014b, U.S. EPA, 2014c, Appendix 6F). The median is the median of the 11 composite E-R functions (U.S. EPA, 2014c, Appendix 5C).
[B] Estimates here are based on the 10 E-R functions for crops described in the WREA, section 6.2 and discussed in the PA, section 5.3.1. The median is the median of the 10 composite E-R functions (U.S. EPA, 2014b; U.S. EPA, 2014c, Appendix 5C).

With regard to secondary standard revisions appropriate to consider in this review, as summarized in the proposal, the PA concluded it to be appropriate to consider a W126-based secondary standard with index values within the range of 7 to 17 ppm-hrs and a form averaged over 3 years (U.S. EPA, 2014c, section 6.7). The PA additionally recognized the role of policy

judgments required of the Administrator with regard to the public welfare significance of identified effects, the appropriate weight to assign the range of uncertainties inherent in the evidence and analyses, and ultimately, in identifying the requisite protection for the secondary O_3 standard.

The PA additionally recognized that to the extent the Administrator finds it useful to consider the public welfare protection that might be afforded by revising the level of the current standard, this is appropriately judged by evaluating the impact of associated O_3 exposures in terms of the cumulative seasonal W126-based index, an exposure metric considered appropriate for evaluating impacts on vegetation (U.S. EPA, 2014c, section 6.7). Accordingly, the PA included several air quality data analyses that might inform such consideration (U.S. EPA, 2014c, section 6.4). Additional air quality analyses were performed subsequent to the PA, described in the proposal and are summarized below.

b. CASAC Advice

Advice received from the CASAC during the current review, similar to that in the last review, recommended retaining O_3 as the indicator, while also recommending consideration of a secondary standard with a revised form and averaging time based on the W126 index (Frey, 2014c, p. iii). The CASAC concurred with the 12-hour period (8 a.m. to 8 p.m.) and 3-month summation period resulting in the maximum W126 index value, as described in the PA, while recommending a somewhat narrower range of levels from 7 ppm-hrs to 15 ppm-hrs. While the CASAC recommended a W126 index limited to a single year, in contrast with the PA's conclusion that it was appropriate to consider the W126 index averaged across three years, it also noted that the Administrator may prefer, as a policy matter, to base the secondary standard on a 3-year averaging period. In such a case, the CASAC recommended revising downward the level

for such a metric to avoid a seasonal W126 index value above a level in their recommended range in any given year of the 3-year period, indicating an upper end of 13 ppm-hrs as an example for such a 3-year average W126 index range (Frey, 2014c, p. iii and iv).

c. Air Quality Analyses

The proposal additionally summarized several analyses of air quality that considered relationships between metrics based on a 3-year W126 index and based on the form and averaging time of the current standard, the "4th high" metric (U.S. EPA, 2014c, Chapter 2, Appendix 2B and section 6.4; Wells, 2014a), as well as describing the uncertainties and limitations associated with these analyses. The proposal concluded that these analyses suggest that, depending on the level, a standard of the current averaging time and form can be expected to control cumulative seasonal O_3 exposures to such that they may meet specific 3-year average W126 index values. The 4th high and W126 metrics, and changes in the two metrics over the past decade, were found to be highly correlated (U.S. EPA, 2014c, section 6.4 and Appendix 2B; Wells, 2014a). From these analyses, it was concluded that future control programs designed to help meet a standard based on the 4th high metric are also expected to result in reductions in values of the W126 metric (Wells, 2014a). Further, the second analysis also found that the Southwest and West NOAA climatic regions, which showed the greatest potential for sites to measure elevated cumulative, seasonal O_3 exposures without the occurrence of elevated daily maximum 8-hour average O_3 concentrations, exhibited the greatest reduction in W126 metric value per unit reduction in 4th high metric (Wells, 2014a, Figures 5b and 12 and Table 6).

Analyses of the most recent periods studied in the two analyses (2009-2011 and 2011-2013) had similar findings regarding the highest W126 metric values occurring at monitoring sites that meet alternative levels of the 4th high metric (U.S. EPA, 2014c, section 6.4; Wells,

2014a). In both analyses, the highest W126 metric values were in the Southwest and West NOAA climatic regions. In both analyses, no monitoring sites for which the 4th high metric was at or below 70 ppb had a W126 metric value above 17 ppm-hrs (U.S. EPA, 2014c, Figure 2B-3b; Wells, 2014a, Table 4). All U.S. regions were represented in these subsets. In the 2011-2013 subset of sites for which the 4th high metric was at or below a potential alternative primary standard level of 65 ppb, no monitoring sites had W126 metric values above 11 ppm-hrs (Wells, 2014a, Table 4).

d. Administrator's Proposed Conclusions

At the time of proposal, the Administrator concluded it to be appropriate to continue to use O_3 as the indicator for a secondary standard that is intended to address effects associated with exposure to O_3 alone and in combination with related photochemical oxidants. While the complex atmospheric chemistry in which O_3 plays a key role has been highlighted in this review, no alternatives to O_3 have been advanced as being a more appropriate surrogate for ambient photochemical oxidants and their effects on vegetation. The CASAC agreed that O_3 should be retained as the indicator for the standard (Frey, 2014c, p. iii). In proposing to retain O_3 as the indicator, the Administrator recognized that measures leading to reductions in ecosystem exposures to O_3 would also be expected to reduce exposures to other photochemical oxidants.

The Administrator proposed to retain the current averaging time and form and to revise the level of the current secondary standard to a level within the range of 0.065 to 0.070 ppm. She based this proposal on her provisional conclusions regarding the level of cumulative seasonal O_3 exposures that would provide the requisite protection against known or anticipated adverse effects to the public welfare and on a policy option that would provide this level of protection. With regard to the former, the Administrator concluded that in judging the extent of public

welfare protection that might be afforded by a revised standard and whether it meets the appropriate level of protection, it is appropriate to use a cumulative, seasonal concentration-weighted exposure metric. For this purpose, the Administrator concluded it to be appropriate to use the W126 index value, averaged across three years, with each year's value identified as that for the 3-month period yielding the highest seasonal value and with daily O_3 exposures within a 3-month period cumulated for the 12-hour period from 8:00 a.m. to 8:00 p.m.

To identify the range of cumulative seasonal exposures, in terms of the W126 index, expected to be associated with the appropriate degree of public welfare protection, the Administrator gave primary consideration to growth-related impacts, using tree seedling RBL estimates for a range of W126 exposure index values and CASAC advice regarding such estimates. Additionally taking into account judgments on important uncertainties and limitations inherent in the current available scientific evidence and quantitative assessments, and judgments regarding the extent to which different RBL estimates might be considered indicative of effects adverse to public welfare, the Administrator proposed that ambient O_3 concentrations resulting in cumulative seasonal O_3 exposures of a level within the range from 13 ppm-hrs to 17 ppm-hrs, in terms of a W126 index averaged across three consecutive years, would provide the requisite protection against known or anticipated adverse effects to the public welfare. In identifying policy options for a revised secondary standard that would control exposures to such an extent, the Administrator considered the results of air quality analyses that examined the responsiveness of cumulative exposures (in terms of the W126 index) to O_3 reductions in response to the current and prior standard for which the form and averaging time are summarized as a 4th high metric, and also examined the extent to which cumulative exposures (in terms of the W126 index) may be limited by alternative levels of a metric based on the current standard averaging time and

form. Based on the results of these analyses, she proposed that revision of the level of the current secondary standard to within the range of 0.065 to 0.070 ppm would be expected to provide the requisite public welfare protection, depending on final judgments concerning such requisite protection.

2. Comments on Proposed Revision

Significant comments from the public regarding revisions to the secondary standard are addressed in the subsections below. We first discuss comments related to our consideration of growth-related effects and visible foliar injury in identifying appropriate revisions to the standard (sections IV.C.2.a and IV.C.2.b). Next, we address comments related to the use of the W126 metric in evaluating vegetation effects and public welfare protection and comments related to the form and averaging time for the revised standard (sections IV.C.2.c and IV.C.2.d). Comments on revisions to the level of the standard are described in section IV.C.2.e, and those related to the way in which today's rulemaking addresses the 2013 court remand are addressed in section IV.C.2.f. Other significant comments related to consideration of a revised secondary standard, and that are based on relevant factors, are addressed in the Response to Comments document.

a. Consideration of Growth-related Effects

In considering public comments received on the consideration of growth-related effects of O_3 in the context of the proposed decision on a revised secondary standard, we first note related advice and comments from the CASAC provided during development of the PA, stating, as summarized in section IV.B.2 above, that "relative biomass loss for tree species, crop yield loss, and visible foliar injury are appropriate surrogates for a wide range of damage that is adverse to public welfare" (Frey, 2014c, p. 10). Additionally, in the context of different standard levels they considered appropriate for the EPA to consider, CASAC stated that it is appropriate

to "include[] levels that aim for not greater than 2% RBL for the median tree species" and that a median tree species RBL of 6% is "unacceptably high" (Frey, 2014c, p. 14).[197] With respect to crop yield loss, CASAC points to a benchmark of 5%, stating that a crop RYL for median species over 5% is "unacceptably high" (Frey, 2014c, p. 13).

In addition, regarding consideration of RBL benchmarks for tree seedlings, the CASAC stated that "[a] 2% biomass loss is an appropriate scientifically based value to consider as a benchmark of adverse impact for long-lived perennial species such as trees, because effects are cumulative over multiple years" (Frey, 2014c, p. 14).[198] With regard to this benchmark, the CASAC also commented that "it is appropriate to identify a range of levels of alternative W126-based standards that includes levels that aim for not greater than 2% RBL for the median tree species" in the PA (Frey, 2014c, p. 14). The CASAC noted that the "level of 7 ppm-hrs is the only level analyzed for which the relative biomass loss for the median tree species is less than or equal to 2 percent," indicating that 7 ppm was appropriate as a lower bound for the recommended range (Frey, 2014c, p. 14).[199]

---

[197] The CASAC made this comment while focusing on Table 6-1 in the second draft PA and the entry for 17 ppm-hrs (Frey, 2014c, p. 14). That table was revised for inclusion in the final PA in consideration of CASAC comments on the E-R function for eastern cottonwood, and after that revision, the median RBL estimate for 17 ppm-hrs in the final table (see Table 4 above) is below the value of 6% that CASAC described in this way.

[198] The CASAC provided several comments related to 2% RBL for tree seedlings both with regard to its use in summarizing WREA results and with regard to consideration of the potential significance of vegetation effects, as summarized in sections IV.D.2 and IV.E.3 of the proposal.

[199] The CASAC made this comment while focusing on Table 6-1 in the second draft PA, which included only odd-numbered W126 index values and in which the median RBL values were based on 12 species. That table was revised for inclusion in the final PA in consideration of CASAC comments on the E-R function for eastern cottonwood, such that the median RBL species estimate for both 7 ppm-hrs and 8 ppm-hrs are less than or equal to 2.0% in the final table (see Table 4 above and Table 5C-3 of the final PA).

With regard to consideration of effects on crops, in addition to their comments regarding a median species RYL over 5% yield loss, noted above (Frey, 2014c, p. 13), the CASAC further noted that "[c]rop loss appears to be less sensitive than these other indicators, largely because of the CASAC judgment that a 5% yield loss represents an adverse impact, and in part due to more opportunities to alter management of annual crops" (Frey, 2014c, p. 14).

Comments from the public with regard to how the EPA considered growth-related effects in the proposed decision on a revised secondary standard varied. Generally, those commenters who recommended against revision of the standard expressed the view that RBL estimates based on the established E-R functions for the 11 studied species, and their pertinence to mature trees, were too uncertain to serve as a basis for judgments regarding public welfare protection afforded by the secondary standard. The EPA generally disagrees with this view, as discussed in section IV.B.2 above, and addressed in more detail in the Response to Comments document.

Some commenters also took note of the unclear basis for CASAC's 2% benchmark, stating that the CASAC advice on this point is "not wholly scientific," given that it referenced the 1996 workshop, which provided little specificity as to scientific basis for such a benchmark; based on this, the commenters described this CASAC advice as a policy judgment and described the important role of the EPA's judgment in such instances. As noted in section IV.E.3 of the proposal, we generally agree with these commenters regarding the unclear scientific basis for the 2% value. Consistent with this advice from CASAC, however, the range of levels for a revised secondary standard that the PA concluded was appropriate for the Administrator to consider did include a level for which the estimated median RBL across the 11 studied tree species would be 2%, as well as a level for which the median RBL would be below 2% (U.S. EPA, 2014c, section 6.7 and Tables 6-1 and 5C-3), and, as described in the proposal, the Administrator considered the

conclusions of the PA in reaching her proposed decision that it was appropriate to consider a range for the revised secondary standard that did not focus on this benchmark. The Administrator has further considered and explained any differences from CASAC's recommendations on this point in her final decision, as described in section IV.C.3 below.

Some of the state and local environmental agencies and organizations and environmental groups that supported the EPA's proposed decision to revise the secondary standard additionally indicated their view that the EPA should give more weight to growth-related effects by setting the standard at a level for which the estimated RBL would be at or below 2% in the median studied species. In support of this recommendation, the commenters cited the CASAC advice and stated that the EPA's rationale deviates from that advice with regard to consideration of RBL. In so doing, the commenters implied incorrectly that the EPA's proposal did not put the most weight on the median RBL. In fact, in considering RBL as a metric for growth effects, the Administrator's proposed conclusions focused solely on the median RBL estimates, indicating that appreciable weight was given to growth-related effects and on the median RBL. Additionally, the commenters implied that the EPA misconstrued the CASAC comment on 6% RBL to indicate that it was acceptable. Yet, the proposal notes CASAC's view that a 6% RBL is "unacceptably high" nine times, and, in section IV.B.3 above, the Administrator takes note of this view in reaching the decision that the current standard should be revised. The EPA considers this statement from CASAC, provided in the context of considering effects related to different W126 index values, to be of a different nature than CASAC advice discussed above that options for the EPA consideration "include" a level that aims for median RBL at or below 2%.

The comments that state that the standard should control cumulative exposures to levels for which the estimated median species RBL is at or below 2% provided little rationale beyond

citing to CASAC advice. We note, however, that the CASAC did not specify that the revised secondary standard be set to limit cumulative exposures to that extent. Nor, in identifying a range of alternatives for the EPA to consider, did CASAC recommend that the EPA consider *only* W126 index levels associated with median RBL estimates at or below 2%. Rather, the CASAC stated that "it is appropriate to identify a range of levels of alternative W126-based standards that *includes* {emphasis added} levels that aim for not greater than 2% RBL for the median tree species" (Frey, 2014c, p. 14) and seven of the nine levels in the CASAC-recommended range of W126 index levels were associated with higher RBL estimates (as shown in Table 4 above).

In citing to CASAC advice, commenters quoted the CASAC characterization of a 2% RBL as "an appropriate scientifically based value to consider as a benchmark of adverse impact for long-lived perennial species such as trees, because effects are cumulative over multiple years" (Frey, 2014, p. 14). Presumably to indicate reasoning for this statement, the subsequent sentence in the same CASAC letter referenced findings for biomass loss in aspen exposed to elevated O_3 over seven years, citing Wittig et al., 2009. As noted in the proposal, however, the way in which these findings would provide a basis for CASAC's view with regard to 2% is unclear, as the original publication that is the source for the 7-year biomass loss value (King, et al., 2005) and which is cited in Wittig et al. (2009) indicates yearly RBL values during this 7-year exposure that are each well above 2%, and, in fact, are all above 20% (King, et al., 2005). In the same paragraph, the CASAC letter additionally referenced the report of the 1996 workshop sponsored by the Southern Oxidants Study group (Heck and Cowling, 1997, noted in section IV.A.3 above). The workshop report identified 1-2% per year growth reduction (based on a stated interest in avoiding 2% cumulative effects) as an appropriate endpoint for consideration of growth effects in trees, although an explicit rationale for the identified percentages is not

provided (Frey, 2014c, p. 14).[200] Like the 1996 workshop, the CASAC describes 2% RBL as providing the basis for consideration of 7 ppm-hrs, the lower end of their recommended W126 range (Frey, 2014c, p. 14). As a result, the specific scientific basis for judging a value of 2% RBL in the median studied species as an appropriate benchmark of adverse impact for trees and other long-lived perennials is not clear, which, as described in the proposal, contributed to the Administrator noting the greater uncertainty regarding the extent to which estimates of benefits in terms of ecosystem services and reduced effects on vegetation at O_3 exposures below her identified range of 13 to 17 ppm-hrs might be judged significant to the public welfare.

Some commenters recommended revision of the standard to 7 ppm-hrs as a W126 form stating that such a change is needed to protect against climate change. In so doing, one commenter expressed the view that the relatively lesser weight the EPA placed on the WREA estimates of carbon storage (in terms of CO_2) in consideration of a proposed revision to the secondary standard is inconsistent with the emphasis that the EPA placed on CO_2 emissions reductions estimated for the proposed Clean Power Plan (79 FR 34830, 34931-33). As support for this view of inconsistency, the commenter compared the WREA 30-year estimate of the amount of CO_2 removed from the air and stored in vegetation with estimated reductions in CO_2 emissions from power plants over a 4-year period. We note, however, some key distinctions between the two types of estimates which appropriately lead to different levels of emphasis by the EPA in the two actions. First, we note that the lengths of time pertaining to the two estimates that the commenter states to be "roughly equal" (e.g., ALA et al., p. 211) differ by more than a factor of seven (4 years compared to 30). Second, the CPP estimates are for reductions in CO_2

[200] The report of the 1996 workshop provides no more explicit rationale for the percentages identified or specification with regard to number or proportion of species for which such percentages should be met (Heck and Cowling, 1997).

produced and emitted from power plants, while the WREA estimates are for amounts of CO_2 removed from the air and stored in vegetation as a result of plant photosynthesis occurring across the U.S. This leads to two important differences. The first is whether a ton of additional carbon uptake by plants is equal to a ton of reduced emissions from fossil fuels. This is still an active area of discussion due in part to the potentially transient nature of the carbon storage in vegetation. The second is that there are much larger uncertainties involved in attempting to quantify the additional carbon uptake by plants which requires complex modeling of biological and ecological processes and their associated sources of uncertainty. Therefore, as summarized in section IV.C.3 below, the Administrator is judging, as at the time of proposal, that the quantitative uncertainties are too great to support identification of a revised standard based specifically on the WREA quantitative estimates of carbon storage benefits to climate. In so doing, she notes that a revised standard, established primarily based on other effects for which our quantitative estimates are less uncertain, can be expected to also provide increased protection in terms of carbon storage.

b. Consideration of Visible Foliar Injury

In considering public comments received on the EPA's consideration of visible foliar injury in its decision on a revised secondary standard, the EPA first notes related advice and comments from the CASAC received during development of the PA. The CASAC stated that "[w]ith respect to the secondary standard, the CASAC concurs with the EPA's identification of adverse welfare effects related to … damage to resource use from foliar injury" (Frey, 2014, p. iii). In its comments on levels of a W126-based standard, the CASAC, seemingly in reference to the WREA visible foliar injury analyses, additionally stated that "[a] level below 10 ppm-hrs is required to reduce foliar injury" (Frey, 2014, pp. iii and 15), with "W126 values below 10 ppm-

hr required to reduce the number of sites showing visible foliar injury" (Frey, 2014, p. 14).

Public comments were generally split between two views, either that visible foliar injury was not appropriate to consider in decisions regarding the standard, based on variously identified reasons, or that it should be considered and it would lead the EPA to focus on a W126 value below approximately 10 ppm-hrs. Comments of the former type are discussed in section IV.B.2 above, with, in some cases, additional detail in the Response to Comments document. Commenters expressing the latter view variously cite CASAC advice and figures from the WREA cumulative analysis of USFS biosite data with WREA W126 index value estimates. The EPA disagrees that only a reduction in cumulative exposures to W126 values below 10 ppm-hrs will affect the occurrence or extent of visible foliar injury. In so doing, we note that the extensive evidence, which is summarized in the ISA (including studies of the USFS biomonitoring program), analyses in the 2007 Staff Paper and also observations based on the WREA dataset do not support this conclusion.

The evidence regarding visible foliar injury as an indicator of O_3 exposure is well established and generally documents a greater extent and severity of visible foliar injury with higher O_3 exposures and a modifying role of soil moisture conditions (U.S. EPA, 2013, section 9.4.2). As stated in the ISA, "[v]isible foliar injury resulting from exposure to O_3 has been well characterized and documented over several decades of research on many tree, shrub, herbaceous and crop species" and "[o]zone-induced visible foliar injury symptoms on certain bioindicator plant species are considered diagnostic as they have been verified experimentally" (U.S. EPA, 2013, p. 9-41). Further, a recent study highlighted in the ISA, which analyzed trends in the incidence and severity of foliar injury, reported a declining trend in the incidence of foliar injury as peak O_3 concentrations declined (U.S. EPA, 2013, p. 9-40; Smith, 2012). Another study

available in this review that focused on O_3-induced visible foliar injury in forests of west coast states observed that both percentage of biosites with injury and average biosite index were higher for sites with average cumulative O_3 concentrations above 25 ppm-hrs in terms of SUM06 (may correspond to W126 of approximately 21 ppm-hrs [U.S. EPA, 2007, p. 8-26, Appendix 7B]) as compared to groups of sites with lower average cumulative exposure concentrations, with much less clear differences between the two lower exposure groups (Campbell et al., 2007, Figures 27 and 28 and p. 30). A similar finding was reported in the 2007 Staff Paper which reported on an analysis that showed a smaller percentage of injured sites among the group of sites with O_3 exposures below a SUM06 metric of 15 ppm-hrs or a 4th high metric of 74 ppb as compared to larger groups that also included sites with SUM06 values up to 25 ppm-hrs or 4th high metric up to 84 ppb, respectively (U.S. EPA 2007, pp. 7-63 to 7-64).

With regard to the comments referencing the WREA cumulative analysis of USFS FHM/FIA biosite data or related CASAC comments, we note some clarification of this analysis. This analysis does not show, as implied by the comments, that at W126 index values above 10 ppm-hrs, there is little change with increasing W126 index in the proportion of records with any visible foliar injury (biosite index above 0). As the analysis is a cumulative analysis, each point graphed in the analysis includes the records for the same and lower W126 index values, so the analysis does not compare results for groups of records with differing, non-overlapping W126 index values. Rather, the points represent groups with records (and W126 index values) in common and the number of records in the groups is greater for higher W126 index values (U.S. EPA, 2014b, section 7.2). Additionally, we note that the pattern observed in the cumulative analysis is substantially influenced by the large number of records for which the W126 index estimates are at or below 11 ppm-hrs, more than two thirds of the dataset (Smith and Murphy,

2015, Table 1).

To more fully address the comments related to this WREA analysis, we have drawn several additional observations from the WREA dataset, re-presenting the same data in a different format in a technical memorandum to the docket (Smith and Murphy, 2015). Contrary to the implication of the statements from the commenters and CASAC that no reduction in the occurrence of visible foliar injury can be achieved with exposures above 10 ppm-hrs, both the proportion of records with injury and the average biosite index are lower for groups of records with W126 index estimates at or below 17 ppm-hrs compared to the group for the highest W126 index range. This is true when considered regardless of soil moisture conditions (all records), as well as for dry, normal and wet records, separately (Smith and Murphy, 2015, Table 2). The pattern of the two measures across record groups with lower W126 index values differs with moisture level, with the wetter than normal records generally showing decreasing proportions of injured sites and decreasing average biosite index with lower W126 index values, while little difference in these measures is seen among the middle W126 values although they are lower than the highest W126 index group and higher than the lowest W126 index group (Smith and Murphy, 2015, Table 2). In summary, the EPA disagrees with commenters, noting that the available information, including additional observations from the WREA dataset, indicate declines in the occurrence of visible foliar injury across decreasing W126 index values that are higher than 10 ppm-hrs.

c. Use of W126 Metric in Evaluating Vegetation Effects and Public Welfare Protection

In considering public comments received on the EPA's use of the W126 exposure index in its decision on a revised secondary standard, the EPA first notes related advice and comments from the CASAC received during development of the PA. Although we recognize that CASAC's

comments on the W126 index were provided in the context of its recommendation for a secondary standard of that form, we find them to also relate to our use of the W126 metric in evaluating the magnitude and extent of vegetation effects that might be expected and conversely the level of protection that might be provided under different air quality conditions. In comments on the first draft PA, the CASAC stated that "discussions and conclusions on biologically relevant exposure metrics are clear and compelling and the focus on the W126 form is appropriate" (Frey and Samet, 2012a). With regard to specific aspects of the W126 index, the CASAC concurred with the second draft PA focus on "the biologically-relevant W126 index accumulated over a 12-hour period (8 a.m. – 8 p.m.) over the 3-month summation period of a single year resulting in the maximum value of W126" (Frey, 2014c, p. iii).

The CASAC advice on levels of the W126 index on which to focus for public welfare protection recommended a level within the range of 7 ppm-hrs to 15 ppm-hrs (Frey, 2014c, p. iii). We note, however, as summarized in section IV.E.3 of the proposal, that this advice was provided in the context of the CASAC review of the second draft PA, which concluded that a range from 7 to 17 ppm-hrs was appropriate to consider. In considering the upper end of this range, the CASAC consulted Table 6-1 of the second draft PA which indicated for a W126 index value of 17 ppm-hrs an RBL estimate of 6%, a magnitude that CASAC described as "unacceptably high" and that contributed to a lack CASAC support for W126 exposures values higher than 15 ppm-hrs (Frey, 2014c, p. 14; U.S. EPA 2014d, Table 6-1). As noted in section IV.E.3 of the proposal, revisions to the RBL estimate table in the final PA, which were made in consideration of other CASAC comments, have resulted in changes to the median species RBL estimate associated with each W126 index value, such that the median species RBL estimate for a W126 index value of 17 ppm-hrs in this table in the final PA was 5.3%, rather than the

"unacceptably high" value of 6% (U.S. EPA, 2014c, Table 6-1; U.S. EPA, 2014d, Table 6-1; Frey, 2014c, p. 14).[201] Additionally, the CASAC recognized that the Administrator may, as a policy matter, prefer to use a 3-year average, and stated that in that case, the range of levels should be revised downward (Frey, 2014c, p. iii-iv).

The majority of comments on the W126 index concurred with its use for assessing O_3 exposures, while some commenters additionally expressed the view that this index should be used as the form of the secondary standard (as discussed in section IV.C.2.b below). Most submissions from state and local environmental agencies or governments, as well as organizations of state agencies, that provided comments on the magnitude of cumulative exposure, in terms of the W126 index, appropriate to consider for a revised secondary standard, recommended that the EPA focus on an index value within the EPA's proposed range of 13 to 17 ppm-hrs, as did the industry commenters. These commenters variously noted their agreement with the rationale provided by the EPA in the proposal or cited to CASAC comments, including for a downward adjustment of its recommended values if a 3-year average W126 was used rather than a single year index. Some other commenters, including two groups of environmental organizations, submitted comments recommending a focus on a W126 index level as low as 7 ppm-hrs based on reasons generally focused on consideration of visible foliar injury.

Some aspects of these comments have been addressed in sections IV.C.2.a and IV.C.2.b above. In the Response to Comments document, we have additionally addressed other comments that recommend a focus on W126 index values for specific reasons other than generally citing

[201] We additionally note that the median species RBL estimate for 17 ppm-hrs in the final PA is nearly identical to the estimate for 15 ppm-hrs (the value corresponding to the upper end of the CASAC-identified range) that was in the second draft PA (5.2%) which was the subject of the CASAC review (U.S. EPA, 2014c, Table 6-1; U.S. EPA, 2014d, Table 6-1).

the CASAC recommended range. Further, in her consideration of a target level of protection for the revised secondary standard in section IV.C.3 below, the Administrator has considered comments from the CASAC regarding the basis for their recommended range.

An additional comment from an organization of western state air quality managers indicated a concern with the use of W126 for vegetation in arid and high altitude regions, such as those in the western states, which the commenter hypothesized may have reduced sensitivity. The commenters did not provide evidence of this hypothesis, calling for further research in order to characterize the sensitivity of vegetation in such areas. The EPA agrees that additional research would be useful in more completely characterizing the response of species in such areas, as well as other less well studied areas, but does not find support in the currently available evidence for the commenter's suggestion that species in arid and high altitude regions may be less sensitive than those in other areas.[202]

Among the small number of commenters recommending against using the W126 metric to assess O_3 exposure, a few expressed the view that some other, not-yet-identified cumulative exposure metric should be used. These commenters cited a variety of concerns that they state are not addressed by the W126 index: that plant exposure to and uptake of O_3 are not always equivalent because of variations in stomatal conductance and plant defenses and their respective diel patterns, which will also influence plant response; that the duration between harmful O_3 exposures affects the plant's ability to repair damage; and, that night-time exposures may be important. These commenters do not identify an alternative to the W126 index that they conclude

[202] For example, we note that among the 11 species for which robust E-R functions have been established for O_3 effects on tree seedling growth, the sensitivity of ponderosa pine, a species occurring in arid and high altitude regions of the western U.S., is similar to the median (U.S. EPA, 2014c, Table 5C-1).

to better represent exposures relevant to considering O_3 effects on vegetation and particularly for growth effects. The EPA has considered the items raised by these commenters, recognizing some as areas of uncertainty (U.S. EPA, 2013, pp. 9-109 to 9-113), yet has concluded that based on the information available at this time, exposure indices that cumulate and differentially weight the higher hourly average concentrations while also including the "mid-level" values offer the most appropriate approach for use in developing response functions and comparing studies of O_3 effects on vegetation (U.S. EPA, 2013, p. 9-117). When considering the response of vegetation to O_3 exposures represented by the threshold (e.g., SUM06) and non-threshold (e.g., W126) indices, the ISA notes that "the W126 metric does not have a cut-off in the weighting scheme as does SUM06 and thus it includes consideration of potentially damaging exposures below 60 ppb" and that "[t]he W126 metric also adds increasing weight to hourly concentrations from about 40 ppb to about 100 ppb" (U.S. EPA, 2013, p. 9-104). This aspect of W126 is one way it differs from cut-off metrics such as the SUM06 where all concentrations above 60 ppb are treated equally and is identified by the ISA as "an important feature of the W126 since as hourly concentrations become higher, they become increasingly likely to overwhelm plant defenses and are known to be more detrimental to vegetation" (U.S. EPA, 2013, p. 9-104). Further, we note the concurrence by CASAC with the EPA's focus on the W126 exposure index, as noted above.

Some commenters also raised concerns regarding the sensitivity of vegetation in desert areas where plants take in ambient air during nighttime rather than daylight hours, such that little exposure occurs from 8 a.m. to 8 p.m., stating that the W126 index as defined by the EPA to cumulate hourly O_3 from 8 a.m. to 8 p.m. may result in an overly stringent exposure level in areas with such vegetation. The EPA recognizes that plants, such as cacti, that commonly occur in desert systems exhibit a particular type of metabolism (referred to as CAM photosynthesis)

such that they only open their stomata at night (U.S. EPA, 2013, p. 9-109). We note, however, that few if any O_3 exposure studies of these species are available[203] to further inform our characterization of these species' responses to O_3, and we have no basis on which to conclude that an exposure level based on the studied species and a daylight exposure metric would be overly or underly stringent in areas where only species utilizing CAM photosynthesis occur. As summarized above, the CASAC advice concurred with the use of an 8am to 8pm diurnal period for the W126 exposure index. Thus, we conclude that for our purposes in this review the focus on daylight hours is appropriate. Our use of the W126 index in this review has been for purposes of characterizing the potential harm and conversely the potential protection that might be afforded from the well-characterized effects of O_3 on vegetation, while recognizing associated uncertainties and limitations. We note that different ecosystems across the U.S. will be expected to be of varying sensitivities with regard to the effects of O_3. For example, large water bodies without vegetation extending above the water's surface would be expected to be less sensitive than forests of sensitive species. The EPA notes, however, that the NAAQS are set with applicability to all ambient air in the U.S., such that the secondary O_3 standard provides protection in areas across the U.S. regardless of site-specific aspects of vegetation sensitivity to O_3. In considering the evidence on O_3 and associated welfare effects, we recognize variability in sensitivity that may relate to a number of factors, as discussed in the ISA (U.S. EPA, 2013, section 9.4.8). This variability is among the Administrator's considerations in setting the secondary standard for O_3 that is requisite to protect public welfare against anticipated or known adverse effects.

[203] No O_3 exposure studies on cacti or other species that utilize CAM photosynthesis are reported in the ISA (U.S. EPA, 2013).

Further, some commenters who agreed with a focus on the W126 exposure index also stated that the EPA's definition of the index for the daylight hours of 8 a.m. to 8 p.m. and a 3-month period was not appropriate, stating that derivation of the W126 metric should involve summing concentrations for all 24 hours in each day and all months in each year to avoid underestimating O_3 exposure that the commenters viewed as pertinent. Support for the EPA's definition of the W126 index, with which CASAC concurred (Frey, 2014c, p. iii), is based on the assessment of the evidence in the ISA (U.S. 2013, section 9.5.3.2) and the context for use of the W126 index in relating O_3 exposure to magnitude and/or extent of O_3 response. This context has a particular focus on growth effects for the purposes of judging the potential for public welfare impacts, as well as the level of protection, associated with different exposure circumstances. We note that the ISA stated there is a lack of information that would allow consideration of the extent to which nocturnal exposures that may be of interest occur (U.S. EPA, 2013, p. 9-109). Additionally, in our use of the W126 index, we are relying on E-R functions based on studies that were generally of 3-month duration and involved controlled exposures during the daylight period. Accordingly we have relied on the E-R function derived for 12-hour and 3-month W126 indices, as described in section IV.A.1 above. To apply these E-R functions to the W126 estimates derived using 24 hours-per-day index values would inaccurately represent the response observed in the study (producing an overestimate). Similarly, with regard to the 3-month duration, "[d]espite the possibility that plants may be exposed to ambient O_3 longer than 3 months in some locations, there is generally a lack of exposure experiments conducted for longer than 3 months" (U.S. EPA, 2014c, p. 9-112). Thus, in consideration of the lack of support in the current evidence for characterizing exposure for purposes of estimating RBL based on cumulative exposures derived from a combination of daytime and nighttime exposures and

consideration of year-round O_3 concentrations across the U.S., we disagree with the commenters' view of the appropriateness of using an exposure index based on 24-hour, year-round O_3 concentrations.

The commenters supporting the use of the W126 exposure index were divided with regard to whether the EPA should focus on an annual index or one averaged over three years. Some of the commenters indicating support for the EPA's proposed focus on a 3-year average W126 stated that this was appropriate in light of the wide variations in W126 values that can occur on a year-to-year basis as a result of the natural variation of climatic conditions that have a direct impact on O_3 formation; in their view, these factors are mitigated by use of a 3-yr average, which thus provides "stability" in the assessment dampening out the natural variation of climatic conditions that have a direct impact on O_3 formation. Others noted that use of a 3-year average may be supported as matter of policy. We generally concur with the relevance of these points, among others, to a focus on the 3-year average W126. Other commenters expressed the view that the EPA should focus on an annual W126 index, generally making these comments in the context of expressing their support for a secondary standard with a W126 form. These commenters variously cited CASAC advice and its rationale for preferring a single year W126 form, stated that vegetation damage occurs on an annual basis, and/or questioned the EPA's statements of greater confidence in conclusions as to O_3 impacts based on a 3-year average exposure metric.

The EPA agrees with commenters that, as discussed in the PA and the proposal, depending on the exposure conditions, O_3 can contribute to measurable effects on vegetation in a single year. We additionally recognize that, as described in the PA and proposal, there is generally a greater significance for effects associated with multiple-year exposures. The proposal

described a number of considerations raised in the PA as influencing the Administrator's decision to focus on a 3-year average W126 index (79 FR 76347). These included, among others, the observation of a greater significance for effects associated with multiple-year exposures, and the uncertainties associated with consideration of annual effects relative to multiple-year effects.

Further, we note that among the judgments contributing to the Administrator's decision on the level of protection appropriate for the secondary standard are judgments regarding the weight to place on the evidence of specific vegetation-related effects estimated to result across a range of cumulative seasonal concentration-weighted O_3 exposures and judgments on the extent to which such effects in such areas may be considered adverse to public welfare (79 FR 75312). Thus, conclusions regarding the extent to which the size and/or prevalence of effects on vegetation in a single year and any ramifications for future years represent an adverse effect to the public welfare, conclusions that are also inherently linked to overall magnitudes of exposures, are dependent on the Administrator's judgment. Accordingly, the decision regarding the need to focus on a 1-year or 3-year W126 index value is also a judgment of the Administrator, informed by the evidence, staff evaluations and advice from CASAC, as described in section IV.C.3 below.

d. Form and Averaging Time

In considering comments received on the proposed form for the revised standard, the EPA first notes the advice and comments from the CASAC, received in its review of the second draft PA. Similar to its advice in the last review, the CASAC recommended "establishing a revised form of the secondary standard to be the biologically relevant W126 index" (Frey, 2014c, p. iii). With regard to its reasons for this view, the CASAC cites the PA in stating that it "concurs with the justification in [section 5.7] that the form of the standard should be changed from the

current 8-hr form to the cumulative W126 index" (Frey, 2014c, p. 12). In addressing specific aspects of this index, the CASAC concurred with the EPA's focus on the 3-month period with the highest index value and further states that "[a]ccumulation over the 08:00 a.m. – 08:00 p.m. daytime 12-hour period is a scientifically acceptable and recommended means of generalizing across latitudes and seasons" (Frey, 2014c, p. 13). As section 5.7 of the PA discusses the W126 index in the context of the support in the evidence for use of the W126 exposure index for assessing impacts of O_3 on vegetation and the extent of protection from such impacts, we interpret CASAC's statement on this point to indicate that the basis for CASAC's view with regard to the form for the secondary standard relates to the appropriateness of the W126 exposure index for those assessment purposes.[204] [205]

The public comments on the form for a revised secondary standard were divided. Most of the state and local environmental agencies or governments, and all of the tribal agencies and organizations that provided comments on the form for the secondary standard concurred with the EPA's proposed decision, as did the industry commenters. These commenters generally

---

[204] Section 5.7 of the PA states that "the evidence continues to provide a strong basis for concluding that it is appropriate to judge impacts of O_3 on vegetation, related effects and services, and the level of public welfare protection achieved, using a cumulative, seasonal exposure metric, such as the W126-based metric," references the support of CASAC for a W126-based secondary standard, and then concludes that "based on the consistent and well-established evidence described above, … the most appropriate and biologically relevant way to relate O_3 exposure to plant growth, and to determine what would be adequate protection for public welfare effects attributable to the presence of O_3 in the ambient air, is to characterize exposures in terms of a cumulative seasonal form, and in particular the W126 metric" (U.S. EPA, 2014c, p. 5-78).

[205] The CASAC also mentioned its support for revising the secondary standard to a W126 index-based form in its review of Chapter 6 of the second draft PA (Frey, 2014c, p. 13). Similar to section 5.7, in that chapter of the PA staff concluded that "specific features associated with the W126 index still make it the most appropriate and biologically relevant cumulative concentration-weighted form for use in the context of the secondary O3 NAAQS review" (U.S. EPA, 2014c, p. 6-5) and also concluded that "it is appropriate to consider a revised secondary standard in terms of the cumulative, seasonal, concentration-weighted form, the W126 index" (U.S. EPA, 2014c, p. 6-57).

indicated agreement with the rationale provided in the proposal that drew from the EPA analyses of recent air quality data examining relationships at sites across the U.S. between values of the 4th high metric (the current design value) and values of a 3-year average W126-based metric, stating that this analysis showed that a standard in the form of the 4th high metric, as proposed, can provide air quality consistent with or below the range of 3-year W126 exposure index values identified in the proposal. Some commenters additionally stated that the choice of form was a policy decision for the EPA and that little or no additional protection of public welfare would be gained by adopting a W126-based form. Some of these commenters provided analyses of data for their state or region that further supported this view. As described in section IV.C.3 below, the EPA generally agrees with these commenters.

Some commenters, including a regional organization of state agencies and two groups of environmental organizations, submitted comments recommending revision of the standard to a cumulative, seasonal form based on the W126 index. In support of their position, these commenters generally cited CASAC advice, variously additionally indicating their view that the standard form should be a metric described as biologically relevant, and that the existing form, with a level in the proposed range, would not provide adequate ecosystem protection. Some commenters additionally suggested that the EPA cannot lawfully retain the form and averaging time that were initially established for purposes of the primary standard when the EPA has identified the W126 index as a metric appropriate for judging vegetation-related effects on public welfare. With regard to the EPA air quality analyses, summarized in the proposal, of the W126 index values at sites where O_3 concentrations met different levels of 4th high metric, some of these commenters stated that the analyses showed widespread variation in W126 values for each 4th high metric examined. Further, some commenters disagreed with the EPA that the analyses

indicated that a revised standard level within the proposed range would be expected to limit W126 exposures in the future to the extent suggested by the analyses of data from the past.

We agree with public commenters and CASAC regarding the appropriateness of the W126 index (the sum of hourly concentrations over a specified period) as a biologically relevant metric for assessing exposures of concern for vegetation-related public welfare effects, as discussed in the proposal, PA and ISA. Accordingly, we agree that this metric is appropriate for use in considering the protection that might be expected to be afforded by potential alternative secondary standards, as discussed in section IV.C.2.c above. We disagree with commenters, however, that use of the W126 metric for this purpose dictates that we must establish a secondary standard with a W126 index form.

In support of this position, we note the common use, in assessments conducted for NAAQS reviews, of exposure metrics that differ in a variety of ways from the ambient air concentration metrics of those standards.[206] Across reviews for the various NAAQS pollutants, we have used a variety of exposure metrics to evaluate the protection afforded by the standards. These exposure metrics are based on the health or welfare effects evidence for the specific pollutant and commonly, in assessments for primary standards, on established exposure-response relationships or health-based benchmarks (doses or exposures of concern) for effects associated with specific exposure circumstances. Some examples of exposure metrics used to evaluate health impacts in primary standard reviews include the concentration of lead in blood of young children and a 5-minute exposure concentration for sulfur dioxide. In contrast, the health-based

[206] The term design value is commonly used to refer to the metric for the standard. Consistent with the summary in section I.D above, a design value is the statistic that describes the air quality of a given location in terms of the indicator, form and averaging time of the standard such that it can then be compared to the level of the standard.

standards for these two pollutants are the 3-month concentration of lead in total suspended particles and the average across three years of the 99th percentile of 1-hour daily maximum concentration of sulfur dioxide in ambient air, respectively (73 FR 66964, November 12, 2008; 75 FR 35520, June 22, 2010). In somewhat similar manner, in the 2012 PM review, the EPA assessed the extent to which the existing 24-hour secondary standard for $PM_{2.5}$, expressed as a 24-hour concentration (of $PM_{2.5}$ mass per cubic meter of air) not to be exceeded more than once per year on average over three years, could provide the desired protection from effects on visibility in terms of the 90th percentile, 24-hour average $PM_{2.5}$ light extinction, averaged over three years, based on speciated $PM_{2.5}$ mass concentrations and relative humidity data (79 FR 3086, January 15, 2013). Additionally, in the case of the screening-level risk analyses in the 2008 review of the secondary standard for lead, concentrations of lead in soil, surface water and sediment were evaluated to assess the potential for welfare effects related to lead deposition from air, while the standard is expressed in terms of the concentration of lead in particles suspended in air (73 FR 67009).

Further, depending on the evidence base, some NAAQS reviews may consider multiple exposure metrics in assessing risks associated with a particular pollutant in ambient air in order to judge the adequacy of an existing standard in providing the required level of protection. And a standard with an averaging time of one duration may provide protection against effects elicited by exposures of appreciably shorter or longer durations. For example, in the current review of the primary O_3 standard, as described in section II above, we have considered the potential for effects associated with both short- and long-term exposures and concluded, based on a combination of air quality and risk analyses and the health effects evidence, that the existing standard with its short (8-hour) averaging time provides control of both the long and short term

exposures (e.g., from one hour to months or years) that may be of concern to public health. Similarly, during the 1996 review of the NO_2 primary standard, while health effects were recognized to result from both long-term and short-term exposures to NO_2, the primary standard, which was a long-term (annual) standard, was concluded to provide the requisite protection against both long- and short-term exposures (61 FR 52852, Oct 8 1996). In the subsequent review of the NO_2 primary standard in which the available air quality information indicated that the annual standard was not providing the needed control of the shorter term exposures, an additional short-term standard was established (75 FR 6474, February 9, 2010).

Thus, we note that different metrics may logically, reasonably, and for technically sound reasons, be used in assessing exposures of concern or characterizing risk as compared to the metric of the standard which is used to control air quality to provide the desired degree of protection. That is, exposure metrics are used to assess the likely occurrence and/or frequency and extent of effects under different air quality conditions, while the air quality standards are intended to control air quality to the extent requisite to protect from the occurrence of public health or welfare effects judged to be adverse. In this review of the secondary standard for O_3, the EPA agrees that, for the reasons summarized in section IV.A.1 above and described in the ISA, the W126 index – and not an 8-hour daily maximum concentration that has relevance in human health risk characterization, as described in section II above - is the appropriate metric for assessing exposures of concern for vegetation, characterizing risk to public welfare, and evaluating what air quality conditions might provide the desired degree of public welfare protection. We disagree, however, that the secondary standard must be established using that same metric.

Moreover, we note that the CAA does not require that the secondary O_3 standard be

established in a specific form. Section 109(b)(2) provides only that any secondary NAAQS "shall specify a level of air quality the attainment and maintenance of which in the judgment of the Administrator, based on [the air quality] criteria, is requisite to protect the public welfare from any known or anticipated adverse effects associated with the presence of such air pollutant in the ambient air. … [S]econdary standards may be revised in the same manner as promulgated." The EPA interprets this provision to leave it considerable discretion to determine whether a particular form is appropriate, in combination with the other aspects of the standard (averaging time, level and indicator), for specifying the air quality that provides the requisite protection, and to determine whether, once a standard has been established in a particular form, that form must be revised. Moreover, nothing in the Act or the relevant case law precludes the EPA from establishing a secondary standard equivalent to the primary standard in some or all respects, as long as the Agency has engaged in reasoned decision-making.[207]

With regard to the commenter's emphasis on advice from CASAC on the form of the secondary standard, the EPA agrees with the importance of giving such advice careful consideration. The EPA further notes, however, that the Administrator is not legally precluded from departing from CASAC's recommendations, when she has provided an explanation of the reasons for such differences.[208] Accordingly, in reaching conclusions on the revised secondary standard in this review, the Administrator has given careful consideration to the CASAC advice in this review and, when she has differed from CASAC recommendations, she has fully

[207] In fact, the D.C. Circuit has upheld secondary NAAQS that were identical to the corresponding primary standard for the pollutant (e.g., *ATA III*, 283 F.3d at 375, 380 [D.C. Cir. 2002, upholding secondary standards for $PM_{2.5}$ and O_3 that were identical to primary standards]).
[208] See CAA sections 307(d)(3) and 307(d)(6)(A); see also *Mississippi v. EPA*, 744 F.3d 1334, 1354 (D.C. Cir. 2013) ("Although EPA is not bound by CASAC's recommendations, it must fully explain its reasons for any departure from them").

explained the reasons and judgments that led her to a different conclusion, as described in section IV.C.3 below.

In disagreeing with the EPA's conclusions drawn from analyses of recent air quality data on the extent to which cumulative seasonal exposures might be limited to within or below the identified 3-year average W126 values by controlling air quality using different values for the 4th high metric, one group of environmental organizations emphasized the range of W126 values that occur at monitors with concentrations at or below specific values for the 4th high metric. For monitor observations for which the 4th high metric was at or below 70 ppb, this commenter group stated that some sites have 3-year average W126 values above 17 ppm-hrs and noted a maximum 3-year W126 index value of 19.1 ppm-hrs, while additionally noting occurrences of other W126 values above the CASAC range of 7 to 15 ppm-hrs. This commenter additionally stated that the air quality data "do not support a claim of congruence" between the 4th high and W126 metrics (e.g., ALA et al., p. 196), that there is no basis for concluding that there is some fundamental underlying relationship that assures meeting the 4th high metric will mean meeting any of the W126 options, and that the relationship between the metrics is non-linear with significant spread in the data (citing visual inspection of a graph).

The EPA does not agree with the commenter's statements regarding the relationship between the two metrics.[209] We have not, as stated by the commenter, claimed there to be "congruence" between the two metrics (e.g., ALA et al., p. 196), or that the two metrics coincide exactly. Rather, at any location, values of both metrics are a reflection of the temporal

[209] The EPA additionally notes that commenters contradict their own assertion when, after stating their view that no relationship exists between the 4th high and W126 metrics, the commenter then states that there is a nonlinear relationship and yet then relies on a predicted linear relationship to estimate W126 values occurring when air quality meets different values for the 4th high metric at 11 national parks.

distribution of hourly O_3 concentrations across the year and both vary in response to changes in that distribution. While the EPA's air quality analysis shows that the specific relationship differs among individual sites, it documents an overall strong, positive, non-linear relationship between the two metrics (Wells, 2014a, p. 6, Figures 5a and 5b; Wells, 2015b). Further, this analysis finds the amount of year-to-year variability in the two metrics tended to decrease over time with decreasing O_3 concentrations, especially for the W126 metric, as described in section IV.E.4 of the proposal (Wells, 2014a; Wells, 2015b).

With regard to the highest 3-year average W126 exposure index values that might reasonably be expected in the future in areas where a revised standard with a 4th high form is met, we disagree with the commenters as to the significance of the W126 index value of 19.1 ppm-hrs in the 13-year dataset. This value, for a site during the period 2006-2008, is the only occurrence at or above 19 ppm-hrs in the nearly 4000 3-year W126 index values - across the 11 3-year periods extending back in time from 2013 - for which the 4th high metric for the same monitor location is at or below 70 ppb. This is clearly an isolated occurrence.

In considering this comment, we have expanded the technical memorandum that was available at the time of proposal (Wells, 2014a). The expanded memorandum describes the same air quality analyses for 3-year periods from 2001 through 2013 as the 2014 memorandum, and includes additional summary tables for all 3-year periods from 2001 through 2013 as well as tables for the most recent period, 2011-2013 (Wells, 2015b). After the 3-year W126 index value of 19 ppm-hrs, the next three highest 3-year average W126 index values, which are the only other such values above 17 ppm-hrs in the 13-year dataset, and which also occur during periods in the past, round to 18 ppm-hrs (Wells, 2015b). Additionally, we note that reductions in the 4th high metric over the 13-year period analyzed are strongly associated with reductions in the

cumulative W126 index (Wells, 2014a, Figure 11, Table 6; Wells, 2015b). Specifically, the regression analysis of changes in W126 index between the 2001-2003 period and the 2011-2013 period with changes in the 4th high metric across the same periods indicates a fairly linear and positive relationship between reductions of the two types of metrics, with, on average, a change of approximately 0.7 ppm-hr in the W126 index per ppb change in the 4th high metric value. From this information we conclude that W126 exposures above 17 ppm-hrs at sites for which the 4th high metric is at or below 70 ppb would be expected to continue to be rare in the future, particularly as steps are taken to meet a 70 ppb standard.

With regard to the comment that the relationship between the two metrics varies across locations, the EPA agrees that there is variation in cumulative seasonal O_3 exposure (in terms of a 3-year average W126 index) among locations that are at or below the same 4th high metric. As noted in the proposal, the analysis illustrates this variation, with the locations in the West and Southwest NOAA climatic regions tending to have the highest cumulative seasonal exposures for the same 4th high value. In considering expectations for the future in light of this observation, however, we note that the regional regressions of reductions in W126 metric with reductions in the 4th high metric indicate that the Southwest and West regions, which had the greatest potential for sites having 3-year W126 index values greater than the various W126 values of interest when 4th high values are less than or equal to the various 4th high levels of interest, also exhibited the greatest reduction in the W126 index values per unit reduction in the 4th high values (Wells, 2015b). Thus, in considering the potential for occurrences of values above 17 ppm-hrs in the future in areas that meet a 4th high of 70 ppb, the EPA notes that the analysis indicates that those areas that exhibited the greatest likelihood of occurrence of a 3-year W126 index above a level of interest (e.g., the commenters' example in the Southwest region of a value of 19.1 ppm-hrs

[2006-2008] in comparison to the W126 level of 17 ppm-hrs) also exhibit the greatest improvement in W126 per unit decrease in 4th high metric.[210] It is expected that future control programs designed to meet a standard with a 4th high form would provide similar improvements in terms of the W126 metric.

As part of their rationale in support of revising the current form and averaging time, one commenter pointed to the regional variation in the highest W126 index values expected at sites that just meet a 4th high metric of 70 ppb, based on the EPA's analysis of recent air quality data available at the time of the proposal (Wells, 2014a). This commenter observed that, while in some U.S. regions, locations that meet a potential alternative standard with the current form and a level of 70 ppb also have 3-year average W126 index values no higher than 17 ppm-hrs, the highest W126 index values in other parts of the country are lower. As a result, the commenter concluded that such a standard would result in regionally differing levels of welfare protection. The commenter additionally states that, for extreme values, a W126 form for the secondary standard would also offer different levels of protection, although with the primary standard setting the upper boundary for such values.

The EPA recognizes that a standard with the current form might be expected to result in regionally differing distributions of W126 exposure index values (including different maximum values) depending on precursor sources, local meteorology, and patterns of O_3 formation. Variation in exposures is to be expected with any standard (secondary or primary) of any form. In fact, variation in exposures and any associated variation in welfare or health risk is generally

[210] Additionally, O_3 levels at any location are influenced by upwind precursor emissions, and many rural areas, including the site referenced by the commenter, are impacted by precursor emissions from upwind urban areas, such that as emissions are reduced to meet a revised standard in the upwind locations, reductions in those upwind emissions will contribute to reductions at the downwind sites (Wells, 2014a; ISA, pp. 3-129 to 3-133).

an inherent aspect of the Administrator's judgment on a specific standard, and any associated variation in welfare or health protection may play a role in the Administrator's judgment with regard to public welfare or public health protection objectives for a national standard. In considering the comment, however, we have focused only on the extent to which the commenter's conclusion that a secondary standard of the current form and averaging time would provide regionally varying welfare protection might indicate that the specified air quality is more (or less) than necessary to achieve the purposes of the standard. In so doing, we additionally respond to a separate comment that the EPA needs to address how the revised secondary standard is neither more or less than necessary to protect the public welfare.

The CAA requirement in establishing a standard is that it be set at a level of air quality that is requisite, meaning "sufficient, but not more than necessary." *Whitman v. American Trucking Ass'ns*, 531 U.S. 457, 473 (2001). We note that the air quality that is specified by the revised primary standard has been concluded to be "necessary" and it may be reasonable and appropriate to consider the stringency of the secondary standard in light of what is identified as "necessary" for the primary standard. The EPA considered the stringency of the O_3 secondary standard in this way in the 1979 decision (44 FR 8211, February 8, 1979), which was upheld in subsequent litigation (*API v Costle*, 665 F.2d 1176 [D.C. Cir. 1991]). We note that, in similar manner, the commenter considered public welfare protection that might be afforded by the primary standard in noting that the primary standard would be expected to provide welfare

protection from extreme values.[211]

In addressing the remand of the 2008 secondary standard in this rulemaking, as discussed in section IV.C.2.e below, the EPA recognizes that it must explain the basis for concluding that the standard selected by the Administrator specifies air quality that will provide the degree of public welfare protection needed from the secondary standard (*Mississippi v. EPA*, 744 F.3d 1334, 1360-61 [D.C. Cir. 2013]). In this review, the Administrator describes the degree or level of public welfare protection needed from the secondary standard and fully explains the basis for concluding that the standard selected specifies air quality that will provide that degree of protection. If the Administrator concludes that the level of air quality specified by the primary standard would provide sufficient protection against known or anticipated adverse public welfare effects, the EPA believes that a secondary standard with that indicator, level, form and averaging time could be considered to be requisite. If the level of air quality that areas will need to achieve or maintain for purposes of the primary standard also provides a level of air quality that is adequate to provide the level of protection identified for the secondary standard, there would be little purpose in requiring the EPA to establish a less stringent secondary standard. For these

[211] As described earlier in this section, the EPA has also considered the air quality specified by one secondary standard in a decision on the need for a second secondary standard. In the decision not to adopt a second $PM_{2.5}$ secondary standard specific to visibility-related welfare effects, the Administrator, after describing the public welfare protection objective related to visibility effects, considered analyses that related air quality associated with the existing secondary standard to that expected for the proposed visibility-focused secondary standard. From these analyses, she concluded sufficient protection against visibility effects would be provided by the existing standard, and to the extent that the existing standard would provide more protection than had been her objective for such effects, adoption of a second secondary standard focused on visibility would not change that result (78 FR 3227-3228, January 15, 2013). This decision responded to a court remand of the prior EPA decision that visibility protection would be afforded by a secondary standard set equal to the primary standard based on the court's conclusion that the EPA had not adequately described the Administrator's objectives for visibility-related public welfare protection under the standard (*American Farm Bureau*, 559 F.3d at 530-531).

reasons, the expectation of regionally differing cumulative exposures under a secondary standard of the current form and averaging time does not lead us to conclude that the air quality specified by such a standard would be more (or less) than necessary (and thus not requisite) for the desired level of public welfare protection.

e. Revisions to the Standard Level

Some comments specifically addressed the level for a revised secondary standard of the current form and averaging time. Of the comments that addressed this, some from states or industry groups generally supported a level within the proposed range, frequently specifying the upper end of the range (70 ppb), while comments from tribes and tribal organizations, and a few others, recommended a level no higher than 65 ppb. The Administrator has considered such comments in reaching her decision on the appropriate revisions to the standard, described in section IV.C.3. Detailed aspects of these comments are discussed in the Response to Comments document.

f. 2013 Court Remand and Levels of Protection

Both industry groups and a group of environmental advocacy organizations submitted comments on the extent to which the proposal addressed the July 2013 remand of the secondary standard by the U.S. Court of Appeals for the D.C. Circuit. The former generally concluded that the proposal had adequately addressed the remand, while the latter expressed the view that the EPA had failed to comply with the court's remand because it had failed to identify the target levels of vegetation protection for which the proposed range of standards would provide the requisite protection, claiming that the identified W126 index range of 13 – 17 ppm-hrs was not based on a proposed level of protection against biomass loss, carbon storage loss, or foliar injury that the EPA had identified as requisite for public welfare.

We agree with the comments that state that we have addressed the court's remand. More specifically, with this rulemaking, including today's decision and the Administrator's conclusions described in section IV.C.3 below, the EPA has fully addressed the remand of the 2008 secondary O_3 standard. In *Mississippi v. EPA*, the D.C. Circuit remanded the 2008 secondary O_3 standard to the EPA for reconsideration because it had not adequately explained why that standard provided the requisite public welfare protection. 744 F.3d 1334, 1360-61 (D.C. Cir. 2013). In doing so, the court relied on the language of CAA section 109(b)(2), and the court's prior decision, *American Farm Bureau Federation v. EPA*, 559 F.3d 512, 528–32 (D.C. Cir. 2009), which came to the same conclusion for the 2006 secondary $PM_{2.5}$ standard. Both decisions recognize that the plain language of section 109(b)(2) requires the EPA to "specify a level of air quality the maintenance of which … is requisite to protect the public welfare from any known or anticipated adverse effects" (*Mississippi*, 744 F.3d at 1360 [citing *American Farm Bureau*, 559 F.3d at 530]). Further, explaining that it was insufficient for the EPA "merely to compare the level of protection afforded by the primary standard to possible secondary standards and to find the two roughly equivalent" (*Mississippi*, 744 F.3d at 1360), the court rejected the EPA's justification for setting the secondary standard equivalent to the primary standard because that justification was based on comparing the protection from the primary standard to that expected from one possible standard with a cumulative, seasonal form (21 ppm-hrs) without stating that such a cumulative seasonal standard would be requisite to protect welfare or explaining why that would be so. Because the EPA had "failed to determine what level of protection was 'requisite to protect the public welfare" (*Mississippi*, 744 F.3d at 1362), the court found that the EPA's rationale failed to satisfy the requirements of the Act.

Today's rulemaking both satisfies the requirements of section 109(b)(2) of the Act and

addresses the issues raised in the court's remand. In this rulemaking, the Administrator has established a revised secondary standard that replaces the remanded 2008 secondary standard. In so doing, based on her consideration of the currently available evidence and quantitative exposure and air quality information, as well as advice from CASAC and input from public comments, the Administrator has described the requisite public welfare protection for the secondary standard and explained how the standard selected specifies air quality that will provide that protection. As explained in detail in IV.C.3 below, in this review the Administrator is describing the public welfare protection she finds requisite in terms of seedling RBL in the median species, which serves as a surrogate for a broader array of O_3 effects at the plant and ecosystem levels. This description of the desired protection sufficiently articulates the standard that the Administrator is using to evaluate welfare protection. Further, the Administrator has considered air quality analyses in determining how to achieve the air quality conditions associated with the desired protection. Based on these analyses, the Administrator is determining that revising the level of the secondary standard to 70 ppb, while retaining the current form, averaging time, and indicator, specifies a level of air quality that will provide the requisite public welfare protection.

To the extent the comments suggest that the EPA is required in establishing a standard to identify a precise and quantified level of public welfare protection that is requisite with respect to every potentially adverse public welfare impact (e.g., visible foliar injury, crop yield loss) that is considered in establishing the standard, we disagree. While the D.C. Circuit has required the EPA to "qualitatively describe the standard governing its selection of particular NAAQS," it has expressly "rejected the notion that the Agency must establish a measure of the risk to safety it considers adequate to protect public health every time it establishes a NAAQS" (*ATA III*, 283

F.3d at 369 [internal marks and citations omitted]). That is, the EPA must "engage in reasoned decision-making," but is not required to "definitively identify pollutant levels below which risks to public health are negligible" (*ATA III*, 283 F.3d at 370). This principle recognizes that the Act requires the EPA to establish NAAQS even when the risks or effects of a pollutant cannot be quantified or precisely identified because of scientific uncertainty concerning such effects at atmospheric concentrations (*ATA III*, 283 F.3d at 370). Though these decisions specifically address setting a primary standard under CAA section 109(b)(1), we believe the same principles apply to the parallel provision in section 109(b)(2) governing secondary standards. Accordingly, while the EPA recognizes that it must explain the basis for concluding that the standard selected by the Administrator specifies air quality that will provide the protection against adverse effects on public welfare needed from the secondary standard (*Mississippi v. EPA*, 744 F.3d 1334, 1360-61 [D.C. Cir. 2013]), the CAA does not require the EPA to precisely quantify the measure of protection that is necessary to protect the public welfare in establishing a secondary standard. In light of the Administrator's description of the desired public welfare protection in IV.C.3 below, which has both qualitative and quantitative components, the EPA is not required to further reduce this description to a precise, quantitative target level of vegetation protection. Moreover, nothing in the CAA or in case law requires the EPA to identify a target level of protection for any particular public welfare effect, such as vegetation effects, but rather leaves the Administrator discretion in judging how to describe the public welfare protection that she concludes is requisite. In IV.C.3 below, the Administrator explains her reasoning for giving primary focus to growth-related effects in describing the requisite welfare protection, rather than to other welfare effects such as foliar injury, for which there are more uncertainties and less predictability with respect to the severity of the effects that would be expected from varying O_3

exposures in the natural environment and the significance of the associated impacts to public welfare.

3. Administrator's Conclusions on Revision

In reaching her decision on the appropriate revisions to the secondary standard, the Administrator has drawn on (1) the ISA conclusions regarding the weight of the evidence for a range of welfare effects associated with O_3 in ambient air, quantitative findings regarding air quality and ecosystem exposures associated with such effects, and associated limitations and uncertainties; (2) staff evaluations in the PA of the evidence summarized in the ISA, the exposure/risk information developed in the WREA and analyses of air quality monitoring information; (3) additional air quality analyses of relationships between air quality metrics based on form and averaging time of the current standard and the W126 cumulative seasonal exposure index; (4) CASAC advice; and (5) consideration of public comments. After giving careful consideration to all of this information, the Administrator believes that the conclusions and policy judgments supporting her proposed decision remain valid.

The Administrator concludes it is appropriate to continue to use O_3 as the indicator for a secondary standard intended to address adverse effects to public welfare associated with exposure to O_3 alone and in combination with related photochemical oxidants. In this review, no alternatives to O_3 have been advanced as being a more appropriate surrogate for ambient photochemical oxidants. Advice from CASAC concurs with the appropriateness of retaining the current indicator. Thus, as is the case for the primary standard (discussed above in section II.C.1), the Administrator has decided to retain O_3 as the indicator for the secondary standard. In so doing, she recognizes that measures leading to reductions in ecosystem exposures to O_3 would also be expected to reduce exposures to other photochemical oxidants.

In her decision on the other elements of the standard, the Administrator has considered the body of evidence and information in a systematic fashion, giving appropriate consideration to the important findings of the ISA as to the effects of O_3 in ambient air that may present risks to the public welfare, measures of exposure best formulated for assessment of these effects, associated evidence regarding ecosystem exposures and air quality associated with such effects; judgments regarding the weight to place on strengths, limitations and uncertainties of this full body of information; and public welfare policy judgments on the appropriate degree of protection and the form and level of a revised standard that will provide such protection. In reaching her decision, the Administrator recognizes that the Act does not require that NAAQS be set at zero-risk or background levels, but rather at levels that reduce risk sufficiently to protect public welfare from known or anticipated adverse effects. In addition, we note that the elements of the standard (indicator, level, form, and averaging time) are considered together in assessing the protection provided by a new or revised standard, and the EPA's approach for considering the elements of a new or revised standard is part of the exercise of the judgment of the Administrator.

As an initial matter, the Administrator recognizes the robustness of the longstanding evidence, described in the ISA, of O_3 effects on vegetation and associated terrestrial ecosystems. The newly available studies and analyses have strengthened the evidence for the current review that provides the foundation for the Administrator's consideration of O_3 effects, associated public welfare protection objectives, and the revisions to the current standard needed to achieve those objectives. In light of the extensive evidence base in this regard, the Administrator focuses on protection against adverse public welfare effects of O_3 related effects on vegetation. In so doing, she takes note of effects that compromise plant function and productivity, with associated

effects on ecosystems. She is particularly concerned about such effects in natural ecosystems, such as those in areas with protection designated by Congress for current and future generations, as well as areas similarly set aside by states, tribes and public interest groups with the intention of providing similar benefits to the public welfare. She additionally recognizes that providing protection for this purpose will also provide a level of protection for other vegetation that is used by the public and potentially affected by O_3 including timber, produce grown for consumption and horticultural plants used for landscaping.

A central issue in this review of the secondary standard, as in the last review (completed in 2008), has been consideration of the role for a cumulative seasonal exposure index. In the last review, the Administrator proposed such an index as one of two options for the form of a revised standard. The Administrator's decision in that review was to retain the existing form and averaging time, while revising the standard level to provide the desired level of protection. As described in section IV.A above, this decision was remanded to the EPA in 2013 by the D.C. Circuit. In the current review, the ISA evaluates the evidence and concludes that, among the approaches investigated, quantifying exposure with a cumulative seasonal index best captures the aspects of exposure that relate to effects on vegetation, particularly those related to growth and yield. The PA considered this finding both in the context of assessing potential impacts, and, conversely, the protection from such impacts that might be realized, as well as in the context of using a cumulative seasonal exposure index as a form for the secondary standard. In the proposal, the Administrator focused on the former context, as an exposure index, while additionally soliciting comment on use of the index as the form for the revised standard. Advice from CASAC, all of which was received prior to the proposal, has largely emphasized the latter context, and that was also the focus of some comments.

In considering revisions to the secondary standard that will specify a level of air quality to provide the necessary public welfare protection, the Administrator focuses on use of a cumulative seasonal exposure index, including specifically the W126 index as defined in the proposal, for assessing exposure, both for making judgments with regard to the potential harm to public welfare posed by conditions allowed by various levels of air quality and for making the associated judgments regarding the appropriate degree of protection against such potential harm. In so doing, the Administrator takes note of the conclusions in the ISA and PA, with which the CASAC concurred, that, based on the currently available evidence, a cumulative seasonal concentration-weighted index best captures the aspects of ecosystem exposure to O_3 in ambient air that impact vegetation. In considering the public comments in this area, she notes the broad support for use of such a metric as an exposure index, with many additionally supporting its use as the form for a revised standard, in light of CASAC advice on that point. Thus, based on the substantial support in the evidence and CASAC advice, and in consideration of public comments, the Administrator concludes that it is appropriate to use such a cumulative seasonal concentration-weighted index for purposes of assessing the potential public welfare risks, and similarly, for assessing the potential protection achieved against such risks on a national scale.

The Administrator has considered conclusions of the ISA and PA, as well as advice from CASAC and public comments, regarding different cumulative, concentration-weighted metrics, and different temporal definitions of aspects of these metrics. The Administrator takes note of the PA conclusions in support of the W126 exposure index, recognized by the ISA for its strength in weighting potentially damaging O_3 concentrations that contributes to the advantages it offers over other weighted cumulative indices. With regard to the relevant definitions for the temporal aspects of this index, conclusions in the ISA and PA, and such considerations in the last

review, have led to a focus on a maximum 3-month, 12-hour index, defined by the 3-consecutive-month period within the O_3 season with the maximum sum of W126-weighted hourly O_3 concentrations during the period from 8:00 a.m. to 8:00 p.m. each day (as explained in section IV.A.1.c above). The Administrator takes note of the support in the ISA and PA, as well as CASAC recommendations for consideration of the W126 index defined in this way. While recognizing that no one definition of an exposure metric used for the assessment of protection for multiple effects at a national scale will be exactly tailored to every species or each vegetation type, ecosystem and region of the country, as discussed in section IV.C.2 above, the Administrator judges that on balance, a W126 index derived in this way, and averaged over three years, as discussed below, will be appropriate for such purposes.

In considering the appropriate exposure index to facilitate assessment of the level of protection afforded to the public welfare by alternative secondary standards in the proposal, the Administrator concluded that a 3-year average W126 index was appropriate for these purposes. A number of considerations raised in the PA influenced the Administrator's conclusion at the time of proposal, in combination with public welfare judgments regarding the weight to place on the evidence of specific vegetation-related effects estimated to result across a range of cumulative seasonal concentration-weighted O_3 exposures and judgments on the extent to which such effects in such areas may be considered adverse to public welfare (December 17, 2014, 79 FR 76347, 75312). Some comments were received from the public on this aspect of the proposed decision, as discussed in section IV.C.2 above, and have been considered in the conclusions reached here.

The Administrator continues to place weight on key aspects raised in the PA and summarized in the proposal on the appropriateness of considering a 3-year average index. The

Administrator notes the PA consideration of the potential for multiple consecutive years of critical O_3 exposures to result in larger impacts on forested areas than intermittent occurrences of such exposures due to the potential for compounding effects on tree growth. The Administrator additionally notes the evidence, as considered in the PA and summarized in the proposal, for some perennial species of some effects associated with a single year's exposure of a critical magnitude that may have the potential for some "carry over" of effects on plant growth or reproduction in the subsequent season. Further, the Administrator notes the occurrence of visible foliar injury and growth or yield loss in annual plants or crops associated with exposures of a critical magnitude. While the Administrator appreciates that the scientific evidence documents the effects on vegetation resulting from individual growing season exposures of specific magnitude, including those that can affect the vegetation in subsequent years, she is also mindful, both of the strengths and limitations of the evidence, and of the information on which to base her judgments with regard to adversity of effects on the public welfare. The Administrator also recognizes uncertainties associated with interpretation of the public welfare significance of effects resulting from a single-year exposure, and that the public welfare significance of effects associated with multiple years of critical exposures are potentially greater than those associated with a single year of such exposure.

As she did for the proposal, the Administrator has considered advice from CASAC in this area, including the CASAC comments that it favors a W126-based secondary standard with a single year form, that its recommended range of levels relates to such a form, and that a lower range (e.g., with 13 ppm-hrs at the upper end) would pertain to a 3-year form. The Administrator also notes CASAC's recognition that her decision on use of a 3-year average over a single-year W126 index may be a matter of policy. While recognizing the potential for effects on vegetation

associated with a single-year exposure, the Administrator concludes that use of a 3-year average metric can address the potential for adverse effects to public welfare that may relate to shorter exposure periods, including a single year.

While the Administrator recognizes the scientific information and interpretations, as well as CASAC advice, with regard to a single-year exposure index, she also takes note of uncertainties associated with judging the degree of vegetation impacts for annual effects that would be adverse to public welfare. Even in the case of annual crops, the assessment of public welfare significance is unclear for the reasons discussed below related to agricultural practices. The Administrator is also mindful of the variability in ambient air O_3 concentrations from year to year, as well as year-to-year variability in environmental factors, including rainfall and other meteorological factors, that influence the occurrence and magnitude of O_3-related effects in any year, and contribute uncertainties to interpretation of the potential for harm to public welfare over the longer term. As noted above, the Administrator also recognizes that the public welfare significance of effects associated with multiple years of critical exposures are potentially greater than those associated with a single year of such exposure. Based on all of these considerations, the Administrator recognizes greater confidence in judgments related to public welfare impacts based on a 3-year average metric. Accordingly, the considerations identified here lead the Administrator to conclude it is appropriate to use an index averaged across three years for judging public welfare protection afforded by a revised secondary standard.

In reaching a conclusion on the amount of public welfare protection from the presence of O_3 in ambient air that is appropriate to be afforded by a revised secondary standard, the Administrator has given particular consideration to the following: (1) the nature and degree of effects of O_3 on vegetation, including her judgments as to what constitutes an adverse effect to

the public welfare; (2) the strengths and limitations of the available and relevant information; (3) comments from the public on the Administrator's proposed decision, including comments related to identification of a target level of protection; and (4) CASAC's views regarding the strength of the evidence and its adequacy to inform judgments on public welfare protection. The Administrator recognizes that such judgments include judgments about the interpretation of the evidence and other information, such as the quantitative analyses of air quality monitoring, exposure and risk. She also recognizes that such judgments should neither overstate nor understate the strengths and limitations of the evidence and information nor the appropriate inferences to be drawn as to risks to public welfare. The CAA does not require that a secondary standard be protective of all effects associated with a pollutant in the ambient air but rather those known or anticipated effects judged adverse to the public welfare (as described in section IV.B.2 above). The Administrator additionally recognizes that the choice of the appropriate level of protection is a public welfare policy judgment entrusted to the Administrator under the CAA taking into account both the available evidence and the uncertainties.

The Administrator finds the coherence and strength of the weight of evidence concerning effects on vegetation from the large body of available literature compelling. The currently available evidence addresses a broad array of O_3-induced effects on a variety of tree species across a range of growth stages (i.e., seedlings, saplings and mature trees) using diverse field-based (e.g., free air, gradient and ambient) and OTC exposure methods. The Administrator gives particular attention to the effects related to native tree growth and productivity, recognizing their relationship to a range of ecosystem services, including forest and forest community composition. She is also mindful of the significance of community composition changes, particularly in protected areas, such as Class I areas. At the same time, she recognizes, while the

evidence strongly supports conclusions regarding O_3 impacts on growth and the evidence showing effects on tree seedlings, as well as on older trees, there are limitations in our ability to predict impacts in the environment or to estimate air quality or exposures that will avoid such impacts. Such limitations relate to the variability of environmental factors or characteristics that can influence the extent of O_3 effects.

In recognition of the CASAC advice and the potential for adverse public welfare effects, the Administrator has considered the nature and degree of effects of O_3 on the public welfare. In so doing, the Administrator recognizes that the significance to the public welfare of O_3-induced effects on sensitive vegetation growing within the U.S. can vary, depending on the nature of the effect, the intended use of the sensitive plants or ecosystems, and the types of environments in which the sensitive vegetation and ecosystems are located. Any given O_3-related effect on vegetation and ecosystems (e.g., biomass loss, visible foliar injury), therefore, may be judged to have a different degree of impact on the public depending, for example, on whether that effect occurs in a Class I area, a residential or commercial setting, or elsewhere. The Administrator notes that such a distinction is supported by CASAC advice in this review. In her judgment, like those of the Administrator in the last review, it is appropriate that this variation in the significance of O_3-related vegetation effects should be taken into consideration in making judgments with regard to the level of ambient O_3 concentrations that is requisite to protect the public welfare from any known or anticipated adverse effects. As a result, the Administrator concludes that of those known and anticipated O_3-related vegetation and ecosystem effects identified and discussed in this notice, particular significance should be ascribed to those that may occur on sensitive species that are known to or are likely to occur in federally protected areas such as Class I areas or on lands set aside by states, tribes and public interest groups to

provide similar benefits to the public welfare, for residents on those lands, as well as visitors to those areas.

Likewise, the Administrator also notes that less protection related to growth effects may be called for in the case of other types of vegetation or vegetation associated with other uses or services. For example, the maintenance of adequate agricultural crop yields is extremely important to the public welfare and currently involves the application of intensive management practices. With respect to commercial production of commodities, the Administrator notes that judgments about the extent to which O_3-related effects on commercially managed vegetation are adverse from a public welfare perspective are particularly difficult to reach, given that the extensive management of such vegetation (which, as CASAC noted, may reduce yield variability) may also to some degree mitigate potential O_3-related effects. The management practices used on these lands are highly variable and are designed to achieve optimal yields, taking into consideration various environmental conditions. In addition, changes in yield of commercial crops and commercial commodities, such as timber, may affect producers and consumers differently, further complicating the question of assessing overall public welfare impacts. Thus, the Administrator concludes, while research on agricultural crop species remains useful in illuminating mechanisms of action and physiological processes, information from this sector on O_3-induced effects is considered less useful in informing judgments on what specific standard would provide the appropriate public welfare protection. In so doing, the Administrator notes that a standard revised to increase protection for forested ecosystems would also be expected to provide some increased protection for agricultural crops and other commercial commodities, such as timber.

The Administrator also recognizes that O_3-related effects on sensitive vegetation can

occur in other areas that have not been afforded special federal or other protections, including effects on vegetation growing in managed city parks and residential or commercial settings, such as ornamentals used in urban/suburban landscaping or vegetation grown in land use categories involving commercial production of commodities, such as timber. For vegetation used for residential or commercial ornamental purposes, the Administrator believes that there is not adequate information at this time to establish a secondary standard based specifically on impairment of these categories of vegetation, but notes that a secondary standard revised to provide protection for sensitive natural vegetation and ecosystems would likely also provide some degree of protection for such vegetation.

Based on the above considerations, in identifying the appropriate level of protection for the secondary standard, the Administrator finds it appropriate to focus on sensitive trees and other native species known or anticipated to occur in protected areas such as Class I areas or on other lands set aside by the Congress, states, tribes and public interest groups to provide similar benefits to the public welfare, for residents on those lands, as well as visitors to those areas. In light of their public welfare significance, the Administrator gives particular weight to protecting such vegetation and ecosystems. Given the reasons for the special protection afforded such areas (identified in section I.A.3 above), she recognizes the importance of protecting these natural forests from O_3-induced impacts, including those related to O_3 effects on growth, and including those extending in scale from individual plants to the ecosystem. The Administrator also recognizes that the impacts identified for O_3 range from those for which the public welfare significance may be more easily judged, but for which quantitative relationships with O_3 in ambient air are less well established, such as impacts on forest community composition in protected wilderness areas, carbon storage and other important ecosystem services, to specific

plant-level effects, such as growth impacts (in terms of RBL) in tree seedlings, for which our quantitative estimates are more robust.

For considering the appropriate public welfare protection objective for a revised standard, the Administrator finds appropriate and useful the estimates of tree seedling growth impacts (in terms of RBL) associated with a range of W126-based index values developed from the robust E-R functions for 11 tree species, that were described in the PA and proposal and are summarized in Table 4 above. In making judgments based on those observations, however, the Administrator has considered the broader evidence base and public welfare implications, including associated strengths, limitations and uncertainties. Thus, in drawing on estimates from this table, she is not making judgments simply about a specific magnitude of growth effect in seedlings that would be acceptable or unacceptable in the natural environment. Rather, the Administrator is using the estimates in the table, as suggested by CASAC and emphasized by some commenters, as a surrogate or proxy for consideration of the broader array of vegetation-related effects of potential public welfare significance, that include effects on growth of individual sensitive species and extend to ecosystem-level effects, such as community composition in natural forests, particularly in protected public lands, as well as forest productivity. In so doing, she notes that CASAC similarly viewed biomass loss as "a scientifically valid surrogate of a variety of adverse effects to public welfare" (Frey, 2014c, p. 10). Thus, in considering the appropriate level of public welfare protection for the revised standard, the Administrator gives primary attention to the relationship between W126 exposures and estimates of RBL in tree seedlings in Table 4, finding this to be a useful quantitative tool to inform her judgments in this matter.

In considering the RBL estimates in Table 4 above (drawn from the final PA), the

Administrator takes note of comments from CASAC that also give weight to these relationships in formulating its advice and notes the CASAC comments on specific RBL values (Frey, 2014c). In so doing, she considers and contrasts comments and their context on RBL estimates of 2% and 6% for the median studied species.

With regard to the CASAC advice regarding 2% RBL for the median studied tree species, the Administrator notes, as an initial matter, the unclear basis for such a focus, as described in section IV.C.2 above and in the proposal. Further, she notes that the CASAC advice related to this RBL value was that it would be appropriate for the range of levels identified in the PA for the Administrator's consideration to "include[] levels that aim for not greater than 2% RBL for the median tree species" (Frey, 2014c, p. 14). As described in the proposal, the range identified in the PA, which the Administrator considered, extended down to W126 index levels for which the estimated RBL in the median tree species is less than or equal to 2%, consistent with the CASAC advice. In addition, the Administrator notes that only the lowest portion of this range (7-8 ppm-hrs) corresponds to an estimated RBL for the median tree species of less than or equal to 2%, with the remainder of CASAC's range (up to 15 ppm-hrs) associated with higher median RBL estimates. Thus, the Administrator understands CASAC to have identified 2% RBL for the median tree species as a benchmark falling within, and at one end of, the range of levels of protection that the CASAC considers appropriate for the revised standard to provide. However, the fact that the CASAC range included levels for which the RBL estimates were appreciably greater than 2% indicates that CASAC did not judge it necessary that the revised standard be based on the 2% RBL benchmark. Accordingly, the Administrator proposed revisions to the secondary standard based on options related to higher RBL estimates and associated exposures. After also considering public comments, the Administrator continues to consider the uncertainty

regarding the extent to which associated effects on vegetation at lower O_3 exposures would be adverse to public welfare to be too great to provide a foundation for public welfare protection objectives for a revised secondary standard.

With regard to the CASAC comments on a 6% RBL estimate, the Administrator takes particular note of their characterization of this level of effect in the median studied species as "unacceptably high" (Frey, 2014c, pp. iii, 13, 14). These comments were provided in the context of CASAC's considering the significance of effects associated with a range of alternatives for the secondary standard. Moreover, the range recommended by CASAC excluded W126 index values for which the median species was estimated to have a 6% RBL,[212] based on the information before CASAC at the time (Frey, 2014c, p. 12-13). Accordingly, the EPA interprets these comments regarding 6% RBL to be of a different nature than the CASAC advice regarding a 2% median RBL, both because these two comments are framed to address different questions and because CASAC treated them differently in its recommended range.

In the Administrator's consideration of the RBL estimates to inform judgments on O_3 exposures of concern to public welfare and the appropriate protection that the secondary standard should provide from such exposures, she has given particular consideration to the current evidence for the relationship of reduced growth of sensitive tree species with ecosystem effects

[212] As summarized in IV.C.2 above (and noted in section IV.E.3 of the proposal), revisions to this table in the final PA, made in consideration of other CASAC comments, have resulted in changes to the median species RBL estimates such that the median species RBL estimate for a W126 index value of 17 ppm-hrs in this table in the final PA (5.3%) is nearly identical to the median species estimate for 15 ppm-hrs (the value corresponding to the upper end of the CASAC-identified range) in the second draft PA (5.2%), the review of which was the context for CASAC's advice on this point (Frey, 2014c). The median RBL estimate ranges from 5.3% to 3.8% across the range of W126 exposures (17 ppm-hrs to 13 ppm-hrs) that the Administrator proposed to conclude would provide the appropriate public welfare protection for a revised secondary standard.

(as described in the ISA), CASAC's view of 6% RBL for the median studied species as unacceptably high, and the role of the Administrator's judgments regarding public welfare impacts of effects in specially protected natural systems, such as Class I areas. With regard to a point of focus among the median RBL estimates extending below 6% for purposes of judging the appropriate public welfare protection objectives for a revised secondary standard, the Administrator is mindful of the CASAC advice to consider lower levels if using a 3-year average, rather than annual, W126 index value.

In considering the CASAC advice, the Administrator notes that her judgments on a 3-year average index focus on the level of confidence in conclusions that might be drawn with regard to single as compared to multiple year impacts, as described above. For example, the Administrator, while recognizing the strength of the evidence with regard to quantitative characterization of O_3 effects on growth of tree seedlings and crops, and in addition to noting the additional difficulties for assessing the welfare impacts of O_3 on crops, takes note of the uncertainty associated with drawing conclusions with regard to the extent to which small percent reductions in annual growth contribute to adverse effects on public welfare and the role of annual variability in environmental factors that affect plant responses to O_3. Moreover, as explained above, the Administrator concludes that concerns related to the possibility of a single unusually damaging year, inclusive of those described by the CASAC, can be addressed through use of a 3-year average metric. Thus, similar to the CASAC's view that a lower level would be appropriate with a 3-year form, the Administrator considers it appropriate to focus on a standard that would generally limit cumulative exposures to those for which the median RBL estimate would be somewhat lower than 6%.

In focusing on cumulative exposures associated with a median RBL estimate somewhat

below 6%, the Administrator considers the relationships in Table 4, noting that the median RBL estimate is 6% for a cumulative seasonal W126 exposure index of 19 ppm-hrs. Considering somewhat lower values, the median RBL estimate is 5.7% (which rounds to 6%) for a cumulative seasonal W126 exposure index of 18 ppm-hrs and the median RBL estimate is 5.3% (which rounds to 5%) for 17 ppm-hrs. In light of her decision that it is appropriate to use a 3-year cumulative exposure index for assessing vegetation effects (described above), the potential for single-season effects of concern, and CASAC comments on the appropriateness of a lower value for a 3-year average W126 index, the Administrator concludes it is appropriate to identify a standard that would restrict cumulative seasonal exposures to 17 ppm-hrs or lower, in terms of a 3-year W126 index, in nearly all instances. In reaching this conclusion, based on the current information to inform consideration of vegetation effects and their potential adversity to public welfare, she additionally judges that the RBL estimates associated with marginally higher exposures in isolated, rare instances are not indicative of effects that would be adverse to the public welfare, particularly in light of variability in the array of environmental factors that can influence O_3 effects in different systems and uncertainties associated with estimates of effects associated with this magnitude of cumulative exposure in the natural environment.

While giving primary consideration to growth effects using the surrogate of RBL estimates based on tree seedling effects, the Administrator also recognizes the longstanding and robust evidence of O_3 effects on crop yield. She takes note of CASAC concurrence with the PA description of such effects as of public welfare significance and agrees. As recognized in the proposal, the maintenance of adequate agricultural crop yields is extremely important to the public welfare. Accordingly, research on agricultural crop species remains important for further illumination of mechanisms of action and physiological processes. Given that the extensive

management of such vegetation, which as CASAC noted may reduce yield variability, may also to some degree mitigate potential O_3-related effects, however, judgments about the extent to which O_3-related effects on crop yields are adverse from a public welfare perspective are particularly difficult to reach. Further, management practices for agricultural crops are highly variable and generally designed to achieve optimal yields, taking into consideration various environmental conditions. As a result of this extensive role of management in optimizing crop yield, the Administrator notes the potential for greater uncertainty with regard to estimating the impacts of O_3 exposure on agricultural crop production than that associated with O_3 impacts on vegetation in natural forests. For all of these reasons, the Administrator is not giving the same weight to CASAC's statement regarding crop yield loss as a surrogate for adverse effects on public welfare, or the magnitude that would represent an adverse impact to public welfare, as to the CASAC's comments on RBL as a surrogate for an array of growth-related effects. Similarly, given the considerations summarized above and in the proposal, the Administrator concludes that agricultural crops do not have the same need for additional protection from the NAAQS as forested ecosystems and finds protection of public welfare from crop yield impacts to be a less important consideration in this review for the reasons identified, including the extensive management of crop yields and the dynamics of agricultural markets. Thus, the Administrator is not giving a primary focus to crop yield loss in selecting a revised secondary standard. She notes, however, that a standard revised to increase protection for forested ecosystems would also be expected to provide some increased protection for agricultural crops.

The Administrator has additionally considered the evidence and analyses of visible foliar injury. In so doing, the Administrator notes the ISA conclusion that "[e]xperimental evidence has clearly established a consistent association of visible injury with O_3 exposure, with greater

exposure often resulting in greater and more prevalent injury" (U.S. EPA, 2013, section 9.4.2, p. 9–41). The Administrator also recognizes the potential for this effect to affect the public welfare in the context of affecting values pertaining to natural forests, particularly those afforded special government protection, as discussed in section IV.A.3 above. However, she recognizes significant challenges in judging the specific extent and severity at which such effects should be considered adverse to public welfare, in light of the variability in the occurrence of visible foliar injury and the lack of clear quantitative relationships with other effects on vegetation, as well as the lack of established criteria or objectives that might inform consideration of potential public welfare impacts related to this vegetation effect.

Further, the Administrator takes note of the range of evidence on visible foliar injury and the various related analyses, including additional observations drawn from the WREA biosite dataset in response to comments, as summarized in section IV.C.2 above. In so doing, she does not agree with CASAC's comment that a level of W126 exposure below 10 ppm-hrs is required to reduce foliar injury, noting some lack of clarity in the WREA and PA presentations of the WREA cumulative proportion analysis findings and their meaning (described in section IV.C.2.4 above). She notes that the additional observations summarized in section IV.C.2 above indicate declines in proportions of sites with any visible foliar injury and biosite index scores with reductions in cumulative W126 exposure across a range of values extending at the high end well above 20 ppm-hrs, down past and including 17 ppm-hrs. In considering this information, however, the Administrator takes note of the current lack of robust exposure-response functions that would allow prediction of visible foliar injury severity and incidence under varying air quality and environmental conditions, as recognized in section IV.A.1.b above. Thus, while the Administrator notes that the evidence is not conducive to use for identification of a specific

quantitative public welfare protection objective, due to uncertainties and complexities described in sections IV.A.1.b and IV.A.3 above, she concludes that her judgments above, reached with a focus on RBL estimates, would also be expected to provide an additional desirable degree of protection against visible foliar injury in sensitive vegetation. Accordingly, she considers a conclusion on the appropriateness of selecting a standard that will generally limit cumulative exposures above 17 ppm-hrs to be additionally supported by evidence for visible foliar injury, while not based on specific consideration of this effect.

With the public welfare protection objectives identified above in mind, the Administrator turns to her consideration of form and level for the revised secondary standard. In considering whether the current form should be retained or revised in order to provide the appropriate degree of public welfare protection, the Administrator has considered the analyses of air quality data from the last 13 years that describe the cumulative exposures, in terms of a 3-year W126 index, occurring at monitoring sites across the U.S. when the air quality metric at that location, in terms of the current standard's form and averaging time, is at or below different alternative levels. The Administrator notes both the conclusions drawn from analyses of the strong, positive relationship between these metrics and the findings that indicate the amount of control provided by the 4th high metric.

The Administrator has also considered advice from CASAC and public commenters that support revision of the form to the W126 exposure index. The Administrator concurs with the underlying premise that O_3 effects on vegetation are most directly assessed using a cumulative seasonal exposure index, specifically the W126 exposure index. The Administrator additionally recognizes, based on analyses of the last 13 years of monitoring data, and consideration of modeling analyses with associated limitations and uncertainties, that cumulative seasonal

exposures appear to have a strong relationship with design values based on the current form and averaging time. She additionally notes the correlation of reductions in W126 index values with reductions in precursor emissions over the past decade that were targeted at meeting the current O_3 standards (with 4th high form), which indicate the control of cumulative seasonal exposures that can be achieved with a standard of the current form and averaging time.

With regard to recommendations from the CASAC that the form for the revised secondary standard should be the biologically relevant exposure metric, and related comments from the public indicating that the secondary standard must have such a form, the Administrator disagrees. In so doing, she notes that CAA section 109 does not impose such a requirement on the form or averaging time for the NAAQS, as explained in IV.C.2 above. She further notes that the averaging time and form of primary standards are often not the same as the exposure metrics used in reviews of primary standards, in which specific information on quantitative relationships between different exposure metrics and health risk is more often available than it is in reviews of secondary NAAQS. As discussed in section IV.C.2 above, with examples, a primary standard with a particular averaging time and form may provide the requisite public health protection from health effects that are most appropriately assessed using an exposure metric of a different averaging time and form and indicator, and the same principle can apply when establishing or revising secondary standards. The Administrator recognizes that the exposure metric and the standard metric can be quite similar, as in the case of consideration of short-term health effects with the primary O_3 standard. She also notes, however, as illustrated by the examples described in section IV.C.2 above, that it is not uncommon for the EPA to retain or adopt elements of an existing standard that the Administrator judges in combination across all elements, including in some cases a revised level, to provide the requisite protection under the Act, even if those

elements do not neatly correspond to the exposure metric. Accordingly, she concludes that the Act does not require that the secondary O_3 standard be revised to match the exposure metric identified as biologically relevant in this review, as long as the revised standard provides the degree of protection required under CAA section 109(b)(2).

Based on the considerations described here, including the use of an exposure metric that CASAC has agreed to be biologically relevant and appropriate, related considerations summarized in the proposal with regard to air quality analyses and common uses of exposure metrics in other NAAQS reviews, the Administrator finds that, in combination with a revised level, the current form and averaging time for a revised secondary standard can be expected to provide the desired level of public welfare protection. Accordingly, she next turns to the important consideration of a level that, in combination with the form and averaging time, will yield a standard that specifies the requisite air quality for protection of public welfare. In so doing, she has recognized the recommendation by CASAC for revision of the form and averaging time and provided the basis for her alternative view, as described above. Further, in the context of the Administrator's decision on objectives for public welfare protection of a revised secondary standard, and with consideration of the advice from CASAC on levels for a W126-based standard, the Administrator has also reached the conclusion, as described above, that in order to provide the appropriate degree of public welfare protection, the revised secondary standard should restrict cumulative seasonal exposures to 17 ppm-hrs or lower, in terms of a 3-year average W126 index, in nearly all instances. Thus, the Administrator finds it appropriate to revise the standard level to one that, in combination with the form and averaging time, will exert this desired degree of control for cumulative seasonal exposures.

In considering a revised standard level, the Administrator has, in light of public

comments, revisited the information she considered in reaching her proposed decision on a level within the range of 65 to 70 ppb, and additional information or insights conveyed with public comments. The primary focus of the Administrator's considerations in reaching her proposed decision was the multi-faceted analysis of air quality data from 2001 through 2013 documented in the technical memo in the docket (Wells, 2014a), as well as the earlier analyses and related information described in the PA (as summarized in section IV.E.4 of the proposal). This analysis describes the occurrences of 3-year W126 index values of a magnitude from 17 ppm-hrs through 7 ppm-hrs at monitor locations where O_3 concentrations met different alternative standards with the current form and averaging time, and has been expanded in consideration of public comments to present in summary form the more extensive historical dataset accompanying this analysis (Wells, 2015b). Focusing first on the air quality analyses for the most recent period for which data are available (2011-2013) and with the protection objectives identified above in mind, the Administrator observes that across the sites meeting the current standard of 75 ppb, the analysis finds 25 sites distributed across different NOAA climatic regions with 3-year average W126 index values above 17 ppm-hrs, with the values at nearly half of the sites extending above 19 ppm-hrs, with some well above. In comparison, she observes that across sites meeting an alternative standard of 70 ppb, the analysis for the period from 2011-2013 finds no occurrences of W126 values above 17 ppm-hrs and less than a handful of occurrences that equal 17 ppm-hrs. The more than 500 monitors that would meet an alternative standard of 70 ppb during the 2011-2013 period are distributed across all nine NOAA climatic regions and 46 of the 50 states (Wells, 2015b and associated dataset in the docket).

The Administrator notes that some public commenters, who disagreed with her proposed decision on form and averaging time, emphasized past occurrences of cumulative W126

exposure values above the range identified in the proposal (of 13 to 17 ppm-hrs). For example, these commenters emphasize data from farther back across the full time period of the dataset analyzed in the technical memorandum (2001-2013), identifying a value of 19.1 ppm-hrs at a monitor for which the 4th high is 70 ppb for the 3-year period of 2006-2008. The Administrator notes, as discussed in section IV.C.2 above, that this was one of fewer than a handful of isolated occurrences of sites for which the 4th high was at or below 70 ppb and the W126 index value was above 17 ppm-hrs, all but one of which were below 19 ppm-hrs. The Administrator additionally recognizes her underlying objective of a revised secondary standard that would limit cumulative exposures in nearly all instances to those for which the median RBL estimate would be somewhat lower than 6%. She observes that the single occurrence of 19 ppm-hrs identified by the commenter among the nearly 4000 3-year W126 index values from across the most recently available 11 3-year periods of data at monitors for which the 4th high metric is at or below 70 ppb is reasonably regarded as an extremely rare and isolated occurrence (Wells, 2015b). As such, it is unclear whether it would recur, particularly as areas take further steps to reduce O_3 to meet revised primary and secondary standards. Further, based on the currently available information, the Administrator does not judge RBL estimates associated with marginally higher exposures in isolated, rare instances to be indicative of adverse effects to the public welfare. Thus, the Administrator concludes that a standard with a level of 70 ppb and the current form and averaging time may be expected to limit cumulative exposures, in terms of a 3-year average W126 exposure index, to values at or below 17 ppm-hrs, in nearly all instances, and accordingly, to eliminate or virtually eliminate cumulative exposures associated with a median RBL of 6% or greater.

The Administrator recognizes that any standard intended to exert a very high degree of

control on cumulative seasonal exposures, with the objective of limiting exposures above 17 ppm-hrs across the U.S., in nearly all instances, will, due to regional variation in meteorology and sources of O_3 precursors, result in cumulative seasonal exposures well below 17 ppm-hrs in many areas. Even implementation of a standard set in terms of the cumulative seasonal exposure metric, while limiting the highest exposures, would, due to regional variation in meteorology and sources of O_3 precursors, result in many areas with much lower exposures. Such variation in exposures occurring under a specific standard is not unexpected and the overall distribution of exposures estimated to occur with air quality conditions associated with different alternative standards is a routine part of the consideration of public health protection in reviews of primary standards, and can also play a role in the review of secondary standards. For these reasons, and in light of the discussion in section IV.C.2.d above on consideration of "necessary" protection, the Administrator notes that an expectation of differing exposures is not, in itself, a basis for concluding that the air quality would be more (or less) than necessary (and thus not requisite) for the desired level of public welfare protection.

The Administrator has also considered the protection afforded by a revised standard against other effects studied in this review, such as visible foliar injury and reduced yield for agricultural crops, and also including those associated with climate change. While noting the evidence supporting a relationship of O_3 in ambient air with climate forcing effects, as concluded in the ISA, the Administrator judges the quantitative uncertainties to be too great to support identification of a standard specific to such effects such that she concludes it is more important to focus, as she has done above, on setting a standard based on providing protection against vegetation-related effects which would be expected to also have positive implications for climate change protection through the protection of ecosystem carbon storage.

The Administrator additionally considers the extent of control for cumulative seasonal exposures exerted by a revised standard level of 65 ppb, the lower end of the proposed range. In focusing on the air quality analyses for the most recent 3-year period for which data are available, the Administrator observes that across the sites meeting a 4th high metric of 65 ppb, the analysis finds no occurrences of W126 values above 11 ppm-hrs and 35 occurrences of a value between 7 ppm-hrs and 11 ppm-hrs, scattered across NOAA climatic regions. The Administrator finds these magnitudes of cumulative seasonal exposures to extend appreciably below the objectives she identified above for affording public welfare protection. In considering this alternative level, she additionally notes that data for only 276 monitors (less than 25 percent of the total with valid 4th high and W126 metric values) were at or below a 4th high value of 65 ppb during the period from 2011-2013. In so noting, she recognizes the appreciably smaller and less geographically extensive dataset available and the associated uncertainty for conclusions based on such an analysis.

Thus, based on the support provided by currently available information on air quality, the evidence base of O_3 effects on vegetation and her public welfare policy judgments, and after carefully taking the above comments and considerations into account, fully considering the scientific views of the CASAC, and also taking note of CASAC's policy views, the Administrator has decided to retain the current indicator, form and averaging time and to revise the secondary standard level to 70 ppb. In the Administrator's judgment, based on the currently available evidence and quantitative exposure and air quality information, a standard set at this level, in combination with the currently specified form, averaging time and indicator would be requisite to protect the public welfare from known or anticipated adverse effects. A standard set at this level provides an appreciable increase in protection compared to the current standard. The

Administrator judges that such a standard would protect natural forests in Class I and other similarly protected areas against an array of adverse vegetation effects, most notably including those related to effects on growth and productivity in sensitive tree species. The Administrator believes that a standard set at 70 ppb would be sufficient to protect public welfare from known or anticipated adverse effects and believes that a lower standard would be more than what is necessary to provide such protection. This judgment by the Administrator appropriately recognizes that the CAA does not require that standards be set at a zero-risk level, but rather at a level that reduces risk sufficiently so as to protect the public welfare from known or anticipated adverse effects. Accordingly, the Administrator concludes that it is appropriate to revise the level for the secondary standard to 70 ppb (0.070 ppm), in combination with retaining the current form, indicator, and averaging time, in order to specify the level of air quality that provides the requisite protection to the public welfare from any known or anticipated adverse effects associated with the presence of O_3 in the ambient air.

D. Decision on the Secondary Standard

For the reasons discussed above, and taking into account information and assessments presented in the ISA and PA, the advice and recommendations of CASAC, and the public comments, as well as public welfare judgments, the Administrator is revising the level of the current secondary standard. Specifically, the Administrator has decided to revise the level of the secondary standard to a level of 0.070 ppm, in conjunction with retaining the current indicator, averaging time and form. Accordingly the revised secondary standard is 0.070 ppm O_3, as the annual 4th highest daily maximum 8-hour average concentration, averaged over three years.

V. Appendix U: Interpretation of the Primary and Secondary NAAQS for O_3

A. Background

The EPA is finalizing the proposed Appendix U to 40 CFR Part 50: Interpretation of the Primary and Secondary National Ambient Air Quality Standards for Ozone. The proposed Appendix U addressed the selection of ambient O_3 monitoring data to be used in making comparisons with the NAAQS, data reporting and data handling conventions for comparing ambient O_3 monitoring data with the level of the NAAQS, and data completeness requirements. The EPA solicited public comment on four elements where the proposed Appendix U differed from Appendix P to 40 CFR Part 50, which addressed data handling conventions for the previous O_3 NAAQS. These included the following: 1) the addition of a procedure to combine data collected from two or more O_3 monitors operating simultaneously at the same physical location, 2) the addition of a provision allowing the Regional Administrator to approve "site combinations", or the combination of data from two nearby monitoring sites for the purpose of calculating a valid design value, 3) a change from the use of one-half of the method detection limit (½ MDL) to zero (0.000 ppm) as the substitution value in 8-hour average data substitution tests, and 4) a new procedure for calculating daily maximum 8-hour average O_3 concentrations for the revised NAAQS.

The EPA is also finalizing, as proposed, exceptional events scheduling provisions in 40 CFR 50.14 that will apply to the submission of information supporting claimed exceptional events affecting pollutant data that are intended to be used in the initial area designations for any new or revised NAAQS. The new scheduling provisions will apply to initial area designations for the 2015 O_3 NAAQS.

B. Data Selection Requirements

The EPA proposed this section in Appendix U to clarify which data are to be used in comparisons with the revised O_3 NAAQS. The EPA is finalizing this section in Appendix U as

proposed.

First, the EPA proposed to combine data at monitoring sites with two or more O_3 monitoring instruments operating simultaneously into a single site-level data record for determining compliance with the NAAQS, and proposed an analytical approach to perform this combination (79 FR 75351-75352, December 17, 2014). Several commenters supported the EPA's proposed approach, including the State of Iowa, where 15 of the 20 monitoring sites currently operating two O_3 monitors simultaneously are located. Commenters supporting the proposal noted that a similar approach is already being used for lead and particulate monitoring, and that the proposed approach will help states meet data completeness requirements.

A few commenters supported the EPA's proposed approach with the additional restrictions that the monitoring instruments must use identical methods and be operated by the same monitoring agency. The EPA notes that at the time of this rulemaking, all monitors reporting O_3 concentration data to the EPA for regulatory use were Federal Equivalent Methods (FEMs). All current O_3 FEMs use an ultraviolet photometry sampling methodology and have been found to meet the performance criteria in 40 CFR Part 53. Therefore, the EPA has no reason to believe that O_3 concentration data should not be combined across monitoring methods at the site level. Regarding the commenters' suggestion that data should not be combined when two or more monitors at the same site are operated by different monitoring agencies, the EPA is aware of only one instance where this presently occurs. In this instance, the monitors have been assigned distinct site ID numbers in the AQS database, so that data will not be combined across these monitors. Should future instances arise where two or more monitoring agencies decide to operate O_3 monitors at the same site, the EPA encourages these agencies to work together to establish a plan for how the data collected from these monitors should be used in regulatory

decision making.

One state objected to combining data across monitors because the secondary monitors at their sites were used only for quality assurance purposes and data from these monitors should not be combined with data reported from the primary monitors. The EPA notes that concentration data collected to meet quality assurance requirements (i.e. precision and bias data) are reported and stored in a separate location within the AQS database and are not used for determining compliance with the NAAQS. The required quality assurance data are derived from O_3 standards and not from a separate O_3 monitor. However, if a separate O_3 monitor is used strictly for quality assurance purposes and does not meet the applicable monitoring requirements, it can be distinguished in AQS in such a manner that data from the secondary monitor would not be combined with data from the primary monitor.

Another commenter objected to the proposal because it would reduce the total number of comparisons made with the NAAQS. While this is true, the number of physical locations being compared with the NAAQS will not decrease under the proposed approach, and in fact may increase due to additional sites meeting the data completeness requirements.

Finally, two commenters submitted similar comments citing the EPA's evaluation of collocated O_3 monitoring data and precision data in the ISA (U.S. EPA, 2013, section 3.5.2), and stated that although the median differences in concentrations reported by the pairs of monitoring instruments were near zero, the extreme values were close to +/- 3.5%. The commenter argued that since the O_3 NAAQS are based on the 4th highest annual value, data should not be combined across monitors because of the imprecision in the extreme values. The EPA disagrees, noting that the data presented in the ISA are based on hourly concentrations, while design values for the O_3 NAAQS are based on a 3-year average of 8-hour average concentrations. Thus, the random

variability in the hourly O_3 concentration data due to monitoring imprecision will be reduced when concentrations are averaged for comparison with the NAAQS. Additionally, the precision data are typically collected at concentrations at or above the level of the NAAQS, thus the EPA expects that the level of precision documented in the ISA analysis is consistent with the level of precision in the 4th highest daily maximum concentrations used for determining compliance with the NAAQS.

The EPA is finalizing this addition in Appendix U as proposed. In addition, the AQS database will be updated to require state agencies to designate a primary monitor at O_3 monitoring sites that report data under more than one Pollutant Occurrence Code (POC), a numeric indicator in AQS used to identify individual monitoring instruments. O_3 design value calculations in AQS will be updated so that the data will automatically be combined across POCs at a site, and a single design value will be reported for each site. The EPA notes that the substitution approach described above will only be applied to design value calculations for the revised O_3 standards, and that design values for previous O_3 standards will continue to be calculated at the monitor level, in accordance with the applicable appendices of 40 CFR Part 50.

Second, the EPA proposed to add a provision in Appendix U that would allow the Regional Administrator to approve "site combinations", or to combine data across two nearby monitors for the purpose of calculating a valid design value. Although data handling appendices for previous O_3 standards do not explicitly mention site combinations, the EPA has approved over 100 site combinations since the promulgation of the first 8-hour O_3 NAAQS in 1997. Thus, the EPA's intention in proposing this addition was merely to codify an existing convention, and to improve transparency by implementing site combinations in AQS design value calculations.

Public commenters unanimously supported this proposed addition. Two commenters

suggested that the EPA should require monitoring agencies to provide technical documentation supporting the similarities between sites approved for combining data, including a requirement for simultaneous monitoring whenever possible. One state requested that the EPA provide more detailed acceptability criteria for approving site combinations, while another state urged the EPA not to create a regulatory burden by prescribing detailed requirements codified in regulations.

The EPA is finalizing this addition as proposed in Appendix U. The EPA believes that approval of site combinations should be handled on a case-by-case basis, and that any requests for supporting documentation should be left to the discretion of the Regional Administrator. The EPA may issue future guidance providing general criteria for determining an acceptable level of similarity in air quality concentrations between monitored locations, but is not prescribing detailed criteria for approval of site combinations in this rulemaking.

Additionally, the AQS database will be updated with new fields for monitoring agencies to request site combinations, and an additional field indicating Regional Administrator approval. All pre-existing site combinations will be initially entered into the database as having already been approved by the Regional Administrator. Since this provision has already been used in practice under previous O_3 standards, site combinations will be applied to AQS design value calculations for both the revised O_3 standards and previous O_3 standards.

C. Data Reporting and Data Handling Requirements

First, the EPA proposed a change in Appendix U to the pre-existing 8-hour average data substitution test (40 CFR Part 50, Appendix P, section 2.1) which is used to determine if a site would have had a valid 8-hour average greater than the NAAQS when fewer than 6 hourly O_3 concentration values are available for a given 8-hour period. The EPA proposed to change the value substituted for the missing hourly concentrations from one-half of the method detection

limit of the O_3 monitoring instrument (½ MDL) to zero (0.000 ppm).

Several commenters supported the proposed change, stating that the use of a constant substitution value instead of ½ MDL, which can vary across O_3 monitoring methods, would simplify design value calculations. One commenter noted that with a substitution value of zero, the data substitution test for an 8-hour average value greater than the NAAQS is equivalent to a sum of hourly O_3 concentrations greater than 0.567 ppm (i.e., if the sum is 0.568 ppm or higher, the resulting 8-hour average must be at least 0.071 ppm, which is greater than the revised O_3 NAAQS of 0.070 ppm). Finally, one commenter opposed the proposed change in favor of some type of mathematical or statistical interpolation approach, but did not provide a specific recommendation.

The EPA is finalizing the proposed change in Appendix U, with the addition of a short clause making note of the equivalent summation approach described above. The purpose of the data substitution test is to identify 8-hour periods that do not meet the requirements for a valid 8-hour average, yet the reported hourly concentration values are so high that the NAAQS would have been exceeded regardless of the magnitude of the missing concentration values. The EPA believes that zero, being the lowest measured O_3 concentration physically possible, is the most appropriate value to substitute in this situation. Additionally, the EPA does not support the use of interpolation or other means of filling in missing monitoring data for O_3 NAAQS comparisons. Such an approach would be contrary to the EPA's long-standing policy of using only quality-assured and certified ambient air quality measurement data to determine compliance with the O_3 NAAQS.

Second, the EPA proposed a new procedure in Appendix U for determining daily

maximum 8-hour O_3 concentrations for the revised NAAQS[213]. The EPA proposed to determine the daily maximum 8-hour O_3 concentration based on 17 consecutive moving 8-hour periods in each day, beginning with the 8-hour period from 7:00 a.m. to 3:00 p.m., and ending with the 8-hour period from 11:00 p.m. to 7:00 a.m.. In addition, the EPA proposed that a daily maximum value would be considered valid if 8-hour averages were available for at least 13 of the 17 consecutive moving 8-hour periods, or if the daily maximum value was greater than the level of the NAAQS. This procedure is designed to eliminate "double counting" exceedances of the NAAQS based on overlapping 8-hour periods from two consecutive days with up to 7 hours in common, which was allowed under previous 8-hour O_3 NAAQS. A dozen public commenters expressed support for the proposed procedure, including several states.

One regional air quality management organization and three of its member states submitted similar comments stating that they agreed with the principle of eliminating "double counting" exceedances of the NAAQS based on overlapping 8-hour periods, but suggested an alternative calculation procedure that would accomplish the same objective. The alternative procedure iteratively finds the highest 8-hour period in a given year, then removes this 8-hour period and all other 8-hour periods associated with that day, including any overlapping 8-hour periods on adjacent days, from the data until a daily maximum value is determined for each day of the year with sufficient monitoring data. The EPA examined a similar iterative procedure in a previous data analysis supporting the proposal (Wells, 2014b, Method 1). The EPA compared this procedure to the procedure proposed by the commenters using the data from the original analysis and found the resulting daily maximum 8-hour values to be nearly identical (Wells,

[213] This procedure will be adopted only for the revised O_3 NAAQS. Design values for the 1997 8-hour O_3 NAAQS and the 2008 8-hour O_3 NAAQS will continue to be calculated according to Appendix I and Appendix P of 40 CFR Part 50, respectively.

2015a). Additionally, the commenters' procedure suffers from the same limitations the EPA identified previously in the original analysis: added complexity in design value calculations, longer computational time, and challenges to real-time O_3 data reporting systems, which would have to re-calculate daily maximum 8-hour values for the entire year each time the system was updated with new data.

Three states submitted comments stating that they agreed with the proposed calculation procedure, but disagreed with the proposed requirements for determining a valid daily maximum 8-hour O_3 concentration. These states were primarily concerned that the proposed requirements would only allow a monitoring site to have four missing 8-hour averages during a day before the entire day would be invalidated, compared with six missing 8-hour averages allowed previously. Two of these states also stated concerns that the proposed requirements would be more difficult to meet while maintaining compliance with existing monitoring requirements such as biweekly quality assurance checks. The EPA compared annual data completeness rates calculated using the Appendix U requirements to annual data completeness rates calculated using the requirements under the previous O_3 standards across all U.S. monitoring sites based on data from 2004-2013 (Wells, 2015a). The national mean annual data completeness rate was 0.1% higher under the proposed Appendix U requirements than under the previous O_3 standards, and the national median annual data completeness rates were identical. In addition, the EPA notes that the Appendix U requirements allow for biweekly quality assurance checks and other routine maintenance to be performed between 5:00 a.m. and 9:00 a.m. local time without affecting data completeness. Thus, the EPA does not believe that the proposed daily data completeness requirements in Appendix U will be more difficult for monitoring agencies to meet.

Finally, two public commenters opposed the proposed procedures for determining daily

maximum 8-hour concentrations. These commenters expressed similar concerns, primarily that not considering 8-hour periods starting midnight to 6:00 a.m. is less protective of public health than the procedure used to determine daily maximum 8-hour concentrations for the previous O_3 standards. The EPA believes that this approach provides the appropriate degree of protection for public health, noting that the hourly concentrations from midnight to 7:00 a.m. are covered under the 8-hour period from 11:00 p.m. to 7:00 a.m., which is included in the design value calculations proposed in Appendix U. At the same time, the proposed approach ensures that individual hourly concentrations may not contribute to multiple exceedances of the NAAQS, which the EPA believes is inappropriate given that people are only exposed once.

The EPA is finalizing as proposed in Appendix U the procedure for determining daily maximum 8-hour concentrations. The EPA does not believe that daily maximum 8-hour concentrations for two consecutive days should be based on overlapping 8-hour periods, since the exposures experienced by individuals only occur once. The EPA believes that the new procedure will avoid this outcome while continuing to make use of all hourly concentrations in determining attainment of the standards, without introducing unnecessary complexity into design value calculations, and without creating additional difficulties for monitoring agencies to meet the data completeness requirements.

D. Exceptional Events Information Submission Schedule

The "Treatment of Data Influenced by Exceptional Events; Final Rule" (72 FR 13560, March 22, 2007), known as the Exceptional Events Rule and codified at 40 CFR 50.14, contains generic deadlines for an air agency to submit to the EPA specified information about exceptional events and associated air pollutant concentration data. As discussed in this section and in more detail in the O_3 NAAQS proposal, without revisions to 40 CFR 50.14, an air agency may not be

able to flag and submit documentation for some relevant data either because the generic deadlines may have already passed by the time a new or revised NAAQS is promulgated or because the generic deadlines require submission of documentation at least 12 months prior to the date by which the EPA must make a regulatory decision, which may be before air agencies have collected some of the potentially affected data. Specific to the revised O_3 NAAQS, revisions to 40 CFR 50.14 are needed because it is not possible for air agencies to flag and submit documentation for any exceptional events that occur in October through December of 2016 by 1 year before the designations are made in October 2017, as is required by the existing generic schedule.

The EPA is finalizing exceptional events scheduling provisions in 40 CFR 50.14, as proposed and as supported by multiple commenters, that will apply to the submission of information supporting claimed exceptional events affecting pollutant data that are intended to be used in the initial area designations for any new or revised NAAQS. The new scheduling provisions will apply to initial area designations for the revised O_3 NAAQS. The provisions that we are promulgating use a "delta schedule" that calculates the timelines associated with flagging data potentially influenced by exceptional events, submitting initial event descriptions and submitting exceptional events demonstrations based on the promulgation date of a new or revised NAAQS. The general data flagging deadlines in the Exceptional Events Rule at 40 CFR 50.14(c)(2)(iii) and the general schedule for submission of demonstrations at 40 CFR 50.14(c)(3)(i) continue to apply to data used in regulatory decisions other than those related to the initial area designations process under a new or revised NAAQS.[214]

[214] The EPA intends to consider changes to these retained scheduling requirements as part of the planned notice and comment rulemaking revisions to the 2007 Exceptional Events Rule.

The EPA acknowledges the concern raised by several commenters that a strengthened O_3 NAAQS may result in numerous demonstrations for exceptional events occurring between 2014 and 2016, the data years that the EPA will presumably use for initial area designation decisions made in October 2017.[215] Commenters noted that the proposed schedule is particularly burdensome for agencies needing to submit exceptional events packages for the third year to be used in a 3-year design value (*i.e.*, 2016 data). Several commenters recommended that the EPA either establish no defined schedule for data flagging and exceptional events demonstration submittal or allow a minimum of 2 years from the setting of any new or revised NAAQS for air agencies to provide a complete exceptional events demonstration. Given the CAA requirement that the EPA follow a 2-year designations schedule, the EPA cannot remove submittal schedules entirely for data influenced by exceptional events or provide a minimum 2-year period from the setting of a new or revised NAAQS for documentation submittal. Neither of these options would ensure that the EPA has time to consider event-influenced data in initial area designation decisions. Rather, the EPA is promulgating in this action an exceptional events schedule that provides air agencies with the maximum amount of time available to prepare exceptional events demonstrations and will still allow the EPA sufficient time to consider such exceptional events demonstrations in the designations process in advance of the date by which the EPA must send 120-day notification letters to states.[216] The EPA recognizes that the schedule promulgated in this action is compressed, particularly for the third year of data to be used in a 3-year design value, and we will work cooperatively with air agencies to accommodate this scenario.

---

[215] Governors may also use 2013 data to formulate their recommendations regarding designations.

[216] See Section VIII.B for additional detail on the initial area designations process for the revised O_3 NAAQS.

Under the schedule promulgated in this action and assuming initial area designation decisions in October 2017 for the revised O_3 NAAQS, affected air agencies would need to flag data, submit initial event descriptions and submit demonstrations for exceptional events occurring in 2016 by May 31, 2017. This schedule provides approximately 5 months between the EPA's receipt of the demonstration package and the expected date of designation decisions and approximately 1 month between the EPA's receipt of a package and the date by which the EPA must notify states and tribes of intended modifications to the Governors' recommendations for designations (*i.e.*, 120-day letters).

While, for the third year of data anticipated to be used in a 3-year design value for the revised O_3 NAAQS, the promulgated schedule provides for demonstration submission 5 months after the end of the calendar year, the EPA expects that most submitting agencies will have additional time to prepare documentation as we expect the majority of potential O_3-related exceptional events to occur during the warmer months (*e.g.*, March through October). Additionally, the EPA will soon propose rule revisions to the 2007 Exceptional Events Rule and will release through a *Federal Register* Notice of Availability a draft guidance document to address Exceptional Events Rule criteria for wildfires that could affect O_3 concentrations. We expect to promulgate Exceptional Events Rule revisions and finalize the new guidance document before the October 2016 date by which states, and any tribes that wish to do so, are required to submit their initial designation recommendations for the revised O_3 NAAQS. Considered together, the EPA believes the exceptional events scheduling dates promulgated in this action, the upcoming Exceptional Events Rule revisions, the forthcoming guidance, and the existing guidance and examples of submitted demonstrations currently on the EPA's exceptional events website at http://www2.epa.gov/air-quality-analysis/treatment-data-influenced-exceptional-

events, will help air agencies submit information in a timely manner.

Applying the "delta schedule" promulgated in this action for air quality data collected in 2013 through 2014 that could be influenced by exceptional events and be considered during the initial area designations process for the revised O_3 NAAQS, results in extending to July 1, 2016, the otherwise applicable generic deadlines of July 1, 2014, and July 1, 2015, respectively, for flagging data and providing an initial description of an event (40 CFR 50.14(c)(2)(iii)). The schedule promulgated in this action also results in a July 1, 2016, date for flagging data and providing an initial description of an event for air quality data collected in 2015. The July 1, 2016, date for data collected in 2015 is the same as that which would apply under the existing generic deadline in the 2007 Exceptional Events Rule. Under the schedule promulgated in this action, October 1, 2016 is the deadline for submitting exceptional events demonstrations for data years 2013 through 2015. As noted previously, under the schedule promulgated in this action, affected air agencies would need to flag, submit initial event descriptions and submit demonstrations for exceptional events occurring in 2016 by May 31, 2017. The EPA believes these revisions will provide adequate time for air agencies to review potential O_3 exceptional events influencing compliance with the revised O_3 NAAQS, to notify the EPA by flagging the relevant data and providing an initial event description in AQS, and to submit documentation to support exceptional events demonstrations. The schedule revisions promulgated in this action will also allow the EPA to consider and act on the submitted information during the initial area designation process.

While the EPA will make every effort to designate areas for any new or revised NAAQS on a 2-year schedule, the EPA recognizes that under some circumstances we may need up to an additional year for the designations process to ensure that air agencies and the EPA base

designations decisions on complete and sufficient information. The promulgated schedule accounts for the possibility that the EPA might announce after promulgating a new or revised NAAQS that we are extending the designations schedule beyond 2 years using authority provided in CAA section 107(d)(B)(i). If the EPA determines that we will follow a 3-year designation schedule, the deadline is 2 years and 7 months after promulgation of a new or revised NAAQS for states to flag data influenced by exceptional events, submit initial event descriptions and submit exceptional events demonstrations for the last year of data that will be used in the designations (*e.g.*, if the EPA were to designate areas in October 2018, the exceptional events submittal deadline for 2017 data would be May 31, 2018). If the EPA notifies states and tribes of a designations schedule between 2 and 3 years, the deadline for states to flag data affected by exceptional events, submit initial event descriptions, and submit exceptional events demonstrations associated with data from the last year to be considered would be 5 months prior to the date specified for designation decisions.

Therefore, using the authority provided in CAA section 319(b)(2) and in the 2007 Exceptional Events Rule at 40 CFR 50.14(c)(2)(vi), the EPA is modifying the schedule for flagging data and submitting exceptional events demonstrations considered for initial area designations by replacing the deadlines and information in Table 1 in 40 CFR 50.14 with the deadlines and information presented in Table 5. As we did in the O_3 NAAQS proposal, we are also providing Table 6 to illustrate how the promulgated schedule might apply to the designations process for the revised O_3 NAAQS and to designations processes for other future

new or revised NAAQS.[217]

Additionally, in conjunction with promulgating exceptional events schedules for initial area designations for new or revised NAAQS, the EPA, as proposed, is removing obsolete regulatory language in 40 CFR 50.14(c)(2)(iv) and (v) and 40 CFR 50.14(c)(3)(ii) and (iii) associated with exceptional events schedules for all historical standards.

Table 5. Schedule for Flagging and Documentation Submission for Data Influenced by Exceptional Events for Use in Initial Area Designations

Exceptional Events / Regulatory Action	**Exceptional Events Deadline Schedule[d]**
Flagging and initial event description deadline for data years 1, 2 and 3.[a]	If state and tribal initial designation recommendations for a new/revised NAAQS are due August through January, then the flagging and initial event description deadline will be the July 1 prior to the recommendation deadline. If state and tribal recommendations for a new/revised NAAQS are due February through July, then the flagging and initial event description deadline will be the January 1 prior to the recommendation deadline.
Exceptional events demonstration submittal deadline for data years 1, 2 and 3.[a]	No later than the date that state and tribal recommendations are due to the EPA.
Flagging, initial event description and exceptional events demonstration submittal deadline for data year 4[b] and, where applicable, data year 5.[c]	By the last day of the month that is 1 year and 7 months after promulgation of a new/revised NAAQS, unless either option a or b applies. a. If the EPA follows a 3-year designation schedule, the deadline is 2 years and 7 months after promulgation of a new/revised NAAQS. b. If the EPA notifies the state/tribe that it intends to complete the initial area designations process according to a schedule between 2 and 3 years, the deadline is 5 months prior to the date specified for final designations decisions in such EPA notification.

[217] The range of dates identified in Table 6 is illustrative of the dates for the revised O_3 NAAQS. Users could increment these dates by any constant number (for example by 6 years for a hypothetical NAAQS promulgated in 2021) to develop a table with dates relevant to NAAQS promulgated in the future.

[a] Where data years 1, 2, and 3 are those years expected to be considered in state and tribal recommendations.
[b] Where data year 4 is the additional year of data that the EPA may consider when it makes final area designations for a new/revised NAAQS under the standard designations schedule.
[c] Where data year 5 is the additional year of data that the EPA may consider when it makes final area designations for a new/revised NAAQS under an extended designations schedule.
[d] The date by which air agencies must certify their ambient air quality monitoring data in AQS is annually on May 1 of the year following the year of data collection as specified in 40 CFR 58.15(a)(2). In some cases, however, air agencies may choose to certify a prior year's data in advance of May 1 of the following year, particularly if the EPA has indicated its intent to promulgate final designations in the first 8 months of the calendar year. Data flagging, initial event description and exceptional events demonstration deadlines for “early certified” data will follow the deadlines for “year 4” and “year 5” data.

Table 6. Examples by Month of Applying the Promulgated Revised Schedule for Flagging and Documentation Submission for Data Influenced by Exceptional Events for Use in Initial Area Designations

		Month of NAAQS Promulgation, State and Tribal Recommendation, and Final Designations												
Exceptional Events / Regulatory Action	**Exceptional Events Deadline Schedule[c]**	**Oct**	**Nov**	**Dec**	**Jan**	**Feb**	**Mar**	**Apr**	**May[d]**	**Jun[d]**	**Jul[d]**	**Aug[d]**	**Sep**	**Oct**
		Oct 2015	**Nov 2015**	**Dec 2015**	**Jan 2016**	**Feb 2016**	**Mar 2016**	**Apr 2016**	**May 2016**	**Jun 2016**	**Jul 2016**	**Aug 2016**	**Sep 2016**	**Oct 2016**
Flagging and initial event description deadline for data years 1, 2, and 3.[a]	If state and tribal initial designation recommendations for a new/revised NAAQS are due August through January, then the flagging and initial event description deadline will be the July 1 prior to the recommendation deadline. If state and tribal recommendations for a new/revised NAAQS are due February through July, then the flagging and initial event description deadline will be the January 1 prior to the recommendation deadline.	July 1, 2016 (data years 2013, 2014, 2015)	July 1, 2016 (data years 2013, 2014, 2015)	July 1, 2016 (data years 2013, 2014, 2015)	July 1, 2016 (data years 2013, 2014, 2015)	Jan 1, 2017 (data years 2013, 2014, 2015)	Jan 1, 2017 (data years 2013, 2014, 2015)	Jan 1, 2017 (data years 2013, 2014, 2015)	Jan 1, 2017 (data years 2013, 2014, 2015)	Jan 1, 2017 (data years 2014, 2015, 2016)	Jan 1, 2017 (data years 2014, 2015, 2016)	July 1, 2017 (data years 2014, 2015, 2016)	July 1, 2017 (data years 2014, 2015, 2016)	July 1, 2017 (data years 2014, 2015, 2016)
Exceptional events demonstration submittal deadline for data years 1, 2, and 3.[a]	No later than the date that state and tribal recommendations are due to EPA.	by Oct 2016 (data years 2013, 2014, 2015)	by Nov 2016 (data years 2013, 2014, 2015)	by Dec 2016 (data years 2013, 2014, 2015)	by Jan 2017 (data years 2013, 2014, 2015)	by Feb 2017 (data years 2013, 2014, 2015)	by Mar 2017 (data years 2013, 2014, 2015)	by Apr 2017 (data years 2013, 2014, 2015)	by May 2017 (data years 2013, 2014, 2015)	by June 2017 (data years 2014, 2015, 2016)	by July 2017 (data years 2014, 2015, 2016)	by Aug 2017 (data years 2014, 2015, 2016)	by Sep 2017 (data years 2014, 2015, 2016)	by Oct 2017 (data years 2014, 2015, 2016)
AQS quality assurance and data certification	Annually on May 1 of the year following the year of data collection	May 1	May 1	May 1	May 1	May 1	May 1	May 1	May 1	May 1	May 1	May 1	May 1	May 1
Flagging, initial event description and exceptional events demonstration submittal deadline for data year 4[b] and, where applicable, data year 5.[c]	By the last day of the month that is 1 year and 7 months after promulgation of a new/revised NAAQS, unless either option a or b applies. a. If the EPA follows a 3 year designation schedule, the deadline is 2 years and 7 months after promulgation of a new/revised NAAQS. b. If the EPA notifies the state/tribe that it intends to complete the initial area designations process according to a schedule between 2 and 3 years, the deadline is 5 months prior to the date specified for final designations decisions in such EPA notification.	by May 31, 2017 (data year 2016)	by June 30, 2017 (data year 2016)	by July 31, 2017 (data year 2016)	by Aug 31, 2017 (data year 2016 and potentially 2017)	by Sep 30, 2017 (data year 2016 and potentially 2017)	by Oct 31, 2017 (data year 2016 and potentially 2017)	by Nov 30, 2017 (data year 2016 and potentially 2017)	by Dec 31, 2017 (data year 2016 and potentially 2017)	by Jan 31, 2018 (data year 2017)	by Feb 28/29, 2018 (data year 2017)	by Mar 31, 2018 (data year 2017)	by Apr 30, 2018 (data year 2017)	by May 31, 2018 (data year 2017)
State & Tribal Recommendations to EPA		**Oct 2016**	**Nov 2016**	**Dec 2016**	**Jan 2017**	**Feb 2017**	**Mar 2017**	**Apr 2017**	**May 2017**	**June 2017**	**July 2017**	**Aug 2017**	**Sep 2017**	**Oct 2017**

EPA notifies States/Tribes of intended modifications to recommendations (EPA sends 120-day letters)	**June 2017**	**July 2017**	**Aug 2017**	**Sep 2017**	**Oct 2017**	**Nov 2017**	**Dec 2017**	**Jan 2018**	**Feb 2018**	**Mar 2018**	**Apr 2018**	**May 2018**	**June 2018**
Administrator Promulgates Final Designations	**Oct 2017**	**Nov 2017**	**Dec 2017**	**Jan 2018**	**Feb 2018**	**Mar 2018**	**Apr 2018**	**May 2018**	**June 2018**	**July 2018**	**Aug 2018**	**Sep 2018**	**Oct 2018**

[a] Where data years 1, 2, and 3 are those years expected to be considered in state and tribal recommendations.

[b] Where data year 4 is the additional year of data that the EPA may consider when it makes final area designations for a new/revised NAAQS under the standard designations schedule.

[c] Where data year 5 is the additional year of data that the EPA may consider when it makes final area designations for a new/revised NAAQS under an extended designations schedule.

[d] The date by which air agencies must certify their ambient air quality monitoring data in AQS is annually on May 1 of the year following the year of data collection as specified in 40 CFR 58.15(a)(2). In some cases, however, air agencies may choose to certify a prior year's data in advance of May 1 of the following year, particularly if the EPA has indicated its intent to promulgate final designations in the first 8 months of the calendar year. Data flagging, initial event description and exceptional events demonstration deadlines for “early certified” data will follow the deadlines for “year 4” and “year 5” data.

VI. Ambient Monitoring Related to O_3 Standards

A. Background

The EPA proposed to revise the state-by-state O_3 monitoring seasons; the PAMS monitoring requirements; the FRM for measuring O_3; and the FEM performance requirement specifications for automated O_3 analyzers. The EPA also proposed to make additional minor changes to the FEM analyzer performance testing requirements for NO_2 and particulate matter in part 53.

The EPA is finalizing changes to the length of the required O_3 monitoring season for 32 states and the District of Columbia. Section VI.B of this preamble provides an overview of the proposed changes to the length of the required O_3 monitoring seasons, a summary of significant public comments and our responses, and a summary of the final decisions made to the O_3 monitoring seasons for each state.

The EPA is finalizing changes to the PAMS monitoring requirements in 40 CFR part 58, Appendix D Section 5. Section VI.C of this preamble provides background on the PAMS program and current monitoring requirements, a summary of the proposed changes to the PAMS requirements, a summary of significant public comments and our responses, and a summary of the changes to the PAMS requirements in this final rule.

The EPA is finalizing changes to the FRM for O_3 in Section VI.D of this preamble and to the associated FEM performance requirement specifications for automated O_3 analyzers in Section VI.E. A summary of significant public comments and our responses are provided and a summary of the final changes to the FRM and FEM requirements in this final rule. The EPA is also finalizing minor additional changes to Part 53 including conforming changes to the FEM performance testing requirements in Table B-1 and Figure B-5 for NO_2; extending the period of

time for the Administrator to take action on a request for modification of a FRM or FEM from 30 days to 90 days in part 53.14; and removing an obsolete provision for manufacturers to submit Product Manufacturing Checklists for fine and coarse particulate matter monitors in part 53.9.

B. Revisions to the Length of the Required O_3 Monitoring Seasons

Unlike the ambient monitoring requirements in 40 CFR part 58 for other criteria pollutants that mandate year-round monitoring at State and Local Air Monitoring Stations (SLAMS), O_3 monitoring is only required during the seasons of the year that are conducive to O_3 formation. These seasons vary in length from place–to-place as the conditions conducive to the formation of O_3 (i.e., seasonally-dependent factors such as ambient temperature, strength of solar insolation, and length of day) differ by location. In some locations, conditions conducive to O_3 formation are limited to the summer months of the year. In other states with warmer climates (e.g., California, Nevada, and Arizona), the currently required O_3 season is year-round. Elevated levels of winter-time O_3 have also been measured in some western states where precursor emissions can interact with sunlight off the snow cover under very shallow, stable boundary layer conditions (U.S. EPA 2013a).

The EPA has determined that the proposed lengthening of the O_3 monitoring seasons in 32 states and the District of Columbia is appropriate. Ambient O_3 concentrations in these areas could approach or exceed the level of the NAAQS, more frequently and during more months of the year compared with the current season lengths. It is important to monitor for O_3 during the periods when ambient concentrations could approach the level of the NAAQS to ensure that the public is informed when exposure to O_3 could reach or has reached a level of concern.

The EPA completed an analysis to address whether extensions of currently required monitoring seasons are appropriate (Rice, 2014). In this analysis, we used all available data in

AQS, including data from monitors that collected O_3 data year-round during 2010-2013. More than half of O_3 monitors are voluntarily operated on a year-round basis by monitoring agencies. We determined the number of days where one or more monitors had a daily maximum 8-hour O_3 average equal to or above 0.060 ppm in the months outside each state's current O_3 monitoring season and the pattern of those days in the out-of-season months. We believe that a threshold of 0.060 ppm, taking into consideration reasonable uncertainty, serves as an appropriate indicator of ambient conditions that may be conducive to the formation of O_3 concentrations that approach or exceed the NAAQS. We also considered regional consistency, particularly for those states with little available data. We note that seasonal O_3 patterns vary year-to-year due primarily to highly variable meteorological conditions conducive to the formation of elevated O_3 concentrations early or late in the season in some years and not others. The EPA believes it is important that O_3 monitors operate during all periods when there is a reasonable possibility of ambient levels approaching the level of the NAAQS.

Basing O_3 monitoring season requirements on the goal of ensuring monitoring when ambient O_3 levels approach or exceed the level of the NAAQS supports established monitoring network objectives described in Appendix D of Part 58, including the requirement to provide air pollution data to the general public in a timely manner[218] and to support comparisons of an area's air pollution levels to the NAAQS. The operation of O_3 monitors during periods of time when ambient levels approach or exceed the level of the NAAQS ensures that unusually sensitive people and sensitive groups are alerted to O_3 levels of potential health concern allowing them to take precautionary measures. The majority of O_3 monitors in the U.S. report to AIRNOW,[219] as

[218] Public reporting requirements are detailed in 40 CFR part 58 Appendix G, Uniform Air Quality Index (AQI) and Daily Reporting.
[219] See http://airnow.gov/

well as to state-operated websites and automated phone reporting systems. These programs support many objectives including real-time air quality reporting to the public, O_3 forecasting, and the verification of real-time air quality forecast models.

1. Proposed Changes to the Length of the Required O_3 Monitoring Seasons

The EPA proposed to extend the length of the required O_3 monitoring season in 32 states and the District of Columbia. The proposed changes were an increase of one month for 22 states (Connecticut, Delaware, Idaho, Illinois, Iowa, Kansas, Maryland, Massachusetts, Minnesota, Missouri, Nebraska, New Hampshire, New Jersey, New York, North Carolina, Ohio, Pennsylvania, Rhode Island, South Carolina, Texas (northern portion only), Virginia, and West Virginia) and the District of Columbia, an increase of one and one half months for Wisconsin, an increase of two months for four states (Indiana, Michigan, Montana, and North Dakota), an increase of four months for Florida and South Dakota, an increase of five months for Colorado, and an increase of seven months for Utah. For Wyoming, we proposed to add three months at the beginning of the season and remove one month at the end of the season, resulting in a net increase of two months. Ozone season requirements are currently split by Air Quality Control Region (AQCR) in Louisiana and Texas. We proposed lengthening the required season in the northern part of Texas (AQCR 022, 210, 211, 212, 215, 217, and 218) by one month and leaving the year-round O_3 season in the southern part of Texas (AQCRs 106, 153, 213, 214, and 216) unchanged. No changes were proposed for the AQCRs in Louisiana. As noted earlier, in a few states with limited available data and few exceedance days outside the currently-required season (Iowa, Missouri, and West Virginia), the proposed changes were made by considering supporting information from the surrounding states. These changes involved the proposed addition of one month (March) to the currently-required O_3 seasons for these states.

The EPA also proposed that O_3 monitors at all National Core Multipollutant Monitoring Stations (NCore) be operated year-round, January through December, regardless of the length of the required O_3 season for the remainder of the SLAMS within each state.

We noted that the EPA Regional Administrators have previously approved deviations from the required O_3 monitoring seasons as allowed by paragraph 4.1(i) of 40 CFR part 58, Appendix D. We proposed to retain the rule language permitting such deviations from the required O_3 monitoring seasons, but note that finalized changes to O_3 monitoring season requirements would revoke all existing Regional Administrator-granted waiver approvals. As appropriate, monitoring agencies could seek new approvals for seasonal deviations. Any seasonal deviations based on the Regional Administrator's waiver of requirements must be described in the state's annual monitoring network plan and updated in the AQS.

Given the timing of the final rulemaking and any associated burden on state/local monitoring agencies to implement the extended O_3 seasons, we proposed that implementation of the revised O_3 seasons would become effective at SLAMS (including NCore sites) on January 1, 2017. We solicited comment on whether the revised seasons could be implemented beginning January 1, 2016, for all monitors or for a subset of monitors, such as those currently operating year-round or on a schedule that corresponds to the proposed O_3 season.

2. Comments on the Length of the Required O_3 Monitoring Seasons

We received several comments on the proposed revisions to O_3 monitoring seasons. Several commenters supported the proposed O_3 season length changes and agreed that O_3 monitoring seasons should reflect the times of year when O_3 may approach or exceed the level of the NAAQS. A few commenters noted the complexities that would arise in the implementation of multi-state planning agreements if states that shared an MSA had different required O_3

monitoring seasons. Two state agencies that supported season length changes also recommended changes to neighboring states' O_3 seasons. New York recommended that Connecticut's proposed O_3 season be further extended (adding the month of October) to match the proposed season in New York (March – October) because they share a major MSA and nonattainment area, and the highest design value monitor in the nonattainment area is often in Connecticut. The results from the EPA's analysis did not support the addition of October for Connecticut. The EPA recognizes that there may be value in having a consistent O_3 season across multi-state planning areas. We recommend that monitoring agency representatives from New York and Connecticut contact their respective EPA Regional Office to jointly develop a monitoring plan to provide coverage of the MSA for a longer period of time. Consistent with the results from the EPA's analysis and consistent with our proposal, the EPA is finalizing the March – October season in New York and the March – September season in Connecticut.

Although no changes were proposed for Arkansas, the Arkansas Department of Environmental Quality recommended that the O_3 season in the nonattainment area that includes Crittenden County, Arkansas (March – November) be consistent with the O_3 seasons in Tennessee (March – October) and Mississippi (March – October) by either shortening the O_3 season in Arkansas or lengthening the O_3 season by one month in Tennessee and Mississippi. Based on the results from the EPA's analysis and consistent with our proposal, the EPA is not finalizing any changes to the current O_3 seasons in Arkansas, Tennessee, or Mississippi. There is currently one monitor operating in Crittenden County. We recommend that Arkansas work with their EPA Regional Administrator to consider a waiver for the monitor(s) in Crittenden County to allow a deviation (shortened season) from the required O_3 season if the agency demonstrates that such a deviation is appropriate for consistency in the nonattainment area.

Two commenters noted the need to extend seasons to capture wintertime O_3 events. One commenter urged the EPA to extend monitoring to year-round in the intermountain west (specifically Wyoming) to adequately capture summer and winter O_3 problem days and noted especially two monitors in the Pinedale area of Wyoming that should be operated year-round. The EPA's analysis showed that there were no days that were ≥ 0.060 ppm in Wyoming for the months of October – December and that the Wyoming Department of Environmental Quality is currently operating about 70% of their O_3 monitors year-round including all O_3 monitors in Sublette County, which includes the Pinedale area. Another commenter supported lengthening the seasons for states in the western U.S. where wintertime O_3 could be an issue in light of the unique and growing O_3 pollution problems caused by oil and gas development activities. They also recommended that the EPA expand the O_3 monitoring season to year-round for North Dakota, South Dakota, and Montana beyond what was proposed. The number of observed days that were ≥ 0.060 ppm in the months outside the season proposed for these states (one day for North Dakota and no days observed for South Dakota and Montana) do not support a further extension to the length of the O_3 monitoring season beyond what was proposed. These states are already operating a large percentage of their monitors year-round (89% in North Dakota, 100% in South Dakota, and 78% in Montana). The EPA is finalizing the seasons as proposed in Wyoming (January – September), North Dakota (March – September), South Dakota (March – October), and Montana (April – September). The EPA encourages these states to continue year-round operation of their monitors to determine what areas are affected by elevated levels of winter-time O_3.

The commenters who opposed lengthening the O_3 monitoring seasons noted concerns with the threshold (0.060 ppm) used as the basis for the changes and the length of time (2010-

2013) for which ambient data were retrieved and analyzed. Many of those with concerns recommended that levels in the proposed range (e.g., 0.065 ppm or 0.070 ppm) or the current NAAQS level of 0.075 ppm be used as the appropriate threshold for determining the O_3 season. With regard to the 0.060 ppm threshold used, this value is consistent with the 85 percent threshold used to require additional O_3 monitoring based on Appendix D requirements, which include the MSA population and design value.[220] As noted previously, year-to-year variability occurs in seasonal O_3 patterns based on highly variable and unpredictable meteorological conditions, which can support the formation of early or late season elevated O_3 concentrations in some years and not in other years. This threshold serves as an appropriate indicator of ambient conditions that may be conducive to the formation of O_3 concentrations that approach or exceed the level of the NAAQS.

Certain logistical complexities were noted if longer seasons were required, including site access during winter and the challenge of getting the monitoring equipment ready in time. Four states noted concerns with operator safety and anticipated their inability to access sites due to early spring snowfall. The EPA agrees that site access could be an issue depending on weather conditions and notes that specific site monitoring season deviations may be appropriate. We suggest that this be addressed through the monitoring season waiver process with the EPA Regional Administrator. Any deviations based on the Regional Administrator's waiver of requirements must be described in the state's annual monitoring network plan and updated in AQS.

Several commenters had concerns about the additional cost and resources needed to expand the O_3 monitoring seasons. There was some disagreement with the EPA's total annual

[220] See 40 CFR part 58, appendix D, Table D-2

average cost estimate of $230,000 which took into account the number of O_3 monitors already operating year-round across the country. Commenters noted specifically that the proposed extension of required monitoring seasons would increase operational costs and potentially impact the resources available for other monitoring efforts. The added cost of operating O_3 monitors over a longer period was noted by some commenters, referencing both the cost of staff to operate the monitors, as well as the additional wear and tear those O_3 monitors would experience over a longer operational period. They noted that extending their required monitoring season by adding the month of March would increase staffing requirements for monitor operation and quality assurance. They also noted that the life expectancy of equipment would be reduced due to increased wear and tear. The EPA acknowledges that operational costs for O_3 monitoring networks will incrementally increase in states where required seasons have been lengthened. We encourage monitoring agencies to review available technology and operational procedures to institute practices that could potentially reduce such costs, such as the automation of quality control and calibration checks and remote access to evaluate monitor operations. As noted earlier, all states operated at least a portion of their O_3 monitoring network outside of the required O_3 season during the 2010-2013 data period and reported the data to AQS. In addition, many states are operating more than the minimum number of monitors required to support the basic monitoring objectives described in 40 CFR part 58, Appendix D. Some states have a large percentage of their total O_3 monitors operating outside the currently-required O_3 season and some states have a small percentage. In situations where states are already operating a large number of their O_3 monitors outside their current O_3 season, the actual cost increase will be less. In cases where states have a small number of monitors operating outside their current O_3 season, in addition to automation and remote access, those states could investigate with their Regional

Administrator the process in 40 CFR part 58.14 for reducing the total number of operating monitors that are above the number required by 40 CFR, part 58, appendix D to offset the cost of extending the O_3 monitoring season in their state.

Two commenters had concerns about the 4-year period of time evaluated in the EPA's analysis and noted that the 4-year period of time evaluated does not take into account meteorological anomalies and other weather induced situations and is not consistent with the 3 years used to calculate design values. One state agency's comments referenced their own analysis showing concentrations going back 20 years. They noted that 2010 was an unusual year and inclusion of such an unusual year in the 4-year period (2010-2013) of the EPA's analysis provides too much weight on those data. As noted earlier, year-to-year variability occurs in seasonal O_3 patterns based on variable meteorological conditions and given the impracticality of forecasting such conditions that affect O_3 photochemistry, the EPA believes it is important that O_3 monitors operate when there is a reasonable possibility of ambient levels approaching the level of the NAAQS. Another state agency commented that 4 years appeared to be an unusual number of years given that design values are based on 3 years. To support the proposed rule in 2014, the EPA's analysis of O_3 seasons began in 2013. At that time the EPA's analysis considered the most recent 3 years of certified data (2010 – 2012) and updated the analysis to add a 4th year (2013) when the data were quality-assured, certified, and available in AQS. We used 4 years of data, including the most recent year (2013) to include an additional year of potentially-variable meteorological conditions to propose changes to the seasons. The EPA treated all years equally and did not put any more weight on the 2010 data than any of the other years used in the analysis. The EPA believes that using recently-available data across multiple years to capture varying meteorological conditions was appropriate to support the decisions on

extending the O_3 seasons. One commenter disagreed with the EPA's definition of year-round (at least 20 daily observations in all 12 months of at least 1 year of the 4-year period). The definition of year-round was used to estimate the number of monitors being operated outside a state's required O_3 season and also used for the EPA's Information Collection Request (ICR). All available data in AQS were used for the O_3 season analysis, including data from year-round monitors.

Two commenters noted that "regional consistency" is not a scientific reason and is not needed for making changes to the O_3 seasons. One commenter noted that significant geographical, meteorological and demographic differences exist between neighboring states that may not warrant identical monitoring seasons. The EPA notes that regional consistency was considered, but only important for a few states where little data were available and the neighboring states had more available data and a sufficient number of days that were $\geq$ 0.060 ppm to support the proposed O_3 season changes. Regional consistency was not important for other states.

Some commenters expressed support for the proposed requirement that NCore O_3 sites operate year-round. They questioned whether data from NCore stations outside the O_3 season will be used for designations and requested that the EPA exclude those data from the designations process. Consistent with the designations process for all criteria pollutants, the states, tribes, and the EPA use all data available in AQS that meet the quality assurance requirements in 40 CFR part 58, Appendix A for the designations process. Given that O_3 data from NCore stations will meet these requirements, there is no rational basis for excluding these data from comparison to the NAAQS. Accordingly, such data from NCore stations cannot be excluded and will be treated in a manner equivalent to all other O_3 data in AQS. The EPA

expects that the highest O_3 values will occur during the required O_3 season; therefore, we don't anticipate that NCore data from the out-of-season months will contribute to the design value used in the designations process. The EPA is finalizing the requirement for year-round O_3 monitoring at NCore stations.

The EPA Regional Administrators have previously approved deviations from the required O_3 monitoring seasons through rulemakings (64 FR 3028, January 20, 1999; 67 FR 57332, September 10, 2002; and 69 FR 52836, August 30, 2004). The current ambient monitoring rule, in paragraph 4.1(i) of 40 CFR part 58, Appendix D (71 FR 61319, October 17, 2006), allows the EPA Regional Administrators to approve changes to the O_3 monitoring season without rulemaking. The EPA is retaining the rule language allowing such deviations from the required O_3 monitoring seasons without rulemaking. In the finalized revision to paragraph 4.1(i) of 40 CFR part 58, Appendix D, the EPA is clarifying the minimum considerations that should be taken into account when reviewing requests, and clarifying that changes to the O_3 seasons finalized in this rule revoke all previously approved seasonal deviations. The EPA clarifies that all O_3 season waivers will be revoked when this final rule becomes effective. We encourage monitoring agencies with existing waivers to engage their EPA Regions as soon as possible to evaluate whether new or continued waivers are appropriate given the level of the revised O_3 NAAQS.

We received three comments for and three comments against early implementation of the revised O_3 seasons by the start of the applicable O_3 season in each state by January 1, 2016. Those commenters in favor of early implementation of the revised O_3 seasons are already operating a large percentage of O_3 monitors year-round or outside the current O_3 monitoring season in their state. Those commenters against early implementation cited concerns with the

need for additional time to implement the revised O_3 seasons, especially in areas where access in order to service and support the monitoring equipment may be problematic during winter weather conditions, and the undue burden on already constrained state resources. One commenter noted that given the date for the final rule (October 1, 2015) that there is insufficient time for public review of their annual monitoring network plan due July 1, 2015, for early implementation in 2016. The EPA encourages those agencies who are able to implement the O_3 season changes early to do so by the start of the applicable O_3 season in their state in 2016. However, taking into consideration the timing and potential burden on monitoring agencies, the EPA is finalizing the requirement for implementing the revised O_3 seasons no later than the start of the applicable O_3 monitoring season in 2017, as proposed.

3. Final Decisions on the Length of the Required O_3 Monitoring Seasons

Final changes to the required O_3 monitoring seasons are summarized in this section as well as in revised Table D-3 in 40 CFR part 58, Appendix D.

Detailed state-by-state technical information has been placed in the docket to document the basis for the EPA's decision on each state. This information includes state-by-state maps and number of days that were ≥ 0.060 ppm; distribution charts of the number of days that were ≥ 0.060 ppm by month and state; and detailed information regarding AQS site IDs, dates and concentrations of all occurrences of the 8-hour daily maximum of at least 0.060 ppm between 2010 and 2013. Summaries have also been prepared for each state including the former and proposed O_3 monitoring seasons.

No changes to the required O_3 monitoring season were proposed or finalized for these states: Alabama, Alaska, Arizona, Arkansas, California, Georgia, Hawaii, Kentucky, Northern

Louisiana (AQCR[221] 019, 022), Southern Louisiana (AQCR 106), Maine, Mississippi, Nevada, New Mexico, Oklahoma, Oregon, Tennessee, Southern Texas (AQCR 106, 153, 213, 214, 216), Vermont, Washington, Puerto Rico, Virgin Islands, Guam, and American Samoa. All existing O_3 season deviations or waivers are revoked.

Changes to the required O_3 monitoring seasons are finalized as follows for these states and the District of Columbia and all existing O_3 season deviations or waivers are revoked.

Colorado: Proposed addition of January, February, October, November, and December is finalized. The required season is revised to January – December.

Connecticut: Proposed addition of March is finalized, revising season to March – September.

Delaware: Proposed addition of March is finalized, revising season to March – October.

District of Columbia: Proposed addition of March is finalized, revising season to March – October.

Florida: Proposed addition of January, February, November, and December is finalized. The required season is revised to January – December.

Idaho: Proposed addition of April is finalized, revising season to April – September.

Illinois: Proposed addition of March is finalized, revising season to March – October.

Indiana: Proposed addition of March and October, revising season to March – October.

Iowa: Proposed addition of March is finalized, revising season to March – October.

Kansas: Proposed addition of March is finalized, revising season to March – October.

Maryland: Proposed addition of March is finalized, revising season to March – October.

Massachusetts: Proposed addition of March is finalized, revising season to March – September.

Michigan: Proposed addition of March and October is finalized, revising season to March –

[221] Air Quality Control Region

October.

Minnesota: Proposed addition of March is finalized, revising season to March – October.

Missouri: Proposed addition of March is finalized, revising season to March – October.

Montana: Proposed addition of April and May is finalized, revising season to April – September.

Nebraska: Proposed addition of March is finalized, revising season to March – October.

New Hampshire: Proposed addition of March is finalized, revising season to March – September.

New Jersey: Proposed addition of March is finalized, revising season to March – October.

New York: Proposed addition of March is finalized, revising season to March – October.

North Carolina: Proposed addition of March is finalized, revising season to March – October.

North Dakota: Proposed addition of March and April is finalized, revising season to March – September.

Ohio: Proposed addition of March is finalized, revising season to March – October.

Pennsylvania: Proposed addition of March is finalized, revising season to March – October.

Rhode Island: Proposed addition of March is finalized, revising season to March – September.

South Carolina: Proposed addition of March is finalized, revising season to March – October.

South Dakota: Proposed addition of March, April, May, and October is finalized, revising season to March – October.

Texas (Northern AQCR 022, 210, 211, 212, 215, 217, 218): Proposed addition of November is finalized, revising season to March – November.

Utah: Proposed addition of January, February, March, April, October, November, and December is finalized. The required season is revised to January – December.

Virginia: Proposed addition of March is finalized, revising season to March – October.

West Virginia: Proposed addition of March is finalized, revising season to March – October.

Wisconsin: Proposed addition of March and April 1 – 15 is finalized, revising season to March – October 15.

Wyoming: Proposed addition of January, February, March, and removal of October is finalized, revising season to January – September.

Finally, we are finalizing the required O_3 monitoring season for all NCore stations to be year-round (January – December) regardless of the required monitoring season for the individual state in which the NCore station is located.

C. Revisions to the PAMS Network Requirements

Section 182 (c)(1) of the CAA required the EPA to promulgate rules for enhanced monitoring of O_3, NO_x, and VOCs for nonattainment areas classified as serious (or above) to obtain more comprehensive and representative data on O_3 air pollution. In addition, Section 185B of the CAA required the EPA to work with the National Academy of Sciences (NAS) to conduct a study on the role of O_3 precursors in tropospheric O_3 formation and control. As a result of this study, the NAS issued the report entitled, "Rethinking the Ozone Problem in Urban and Regional Air Pollution", (NAS, 1991).

In response to the CAA requirements and the recommendations of the NAS report, on February 12, 1993 (58 FR 8452), the EPA revised the ambient air quality surveillance regulations to require PAMS in each O_3 nonattainment area classified as serious, severe, or extreme ("PAMS areas"). As noted in the EPA's Technical Assistance Document (TAD) for Sampling and Analysis of Ozone Precursors (U.S. EPA, 1998), the current objectives of the PAMS program are to: 1) provide a speciated ambient air database that is both representative and useful in evaluating control strategies and understanding the mechanisms of pollutant transport by ascertaining ambient profiles and distinguishing among various individual volatile organic

compounds (VOCs); 2) provide local, current meteorological and ambient data to serve as initial and boundary condition information for photochemical grid models; 3) provide a representative, speciated ambient air database that is characteristic of source emission impacts to be used in analyzing emissions inventory issues and corroborating progress toward attainment; 4) provide ambient data measurements that would allow later preparation of unadjusted and adjusted pollutant trends reports; 5) provide additional measurements of selected criteria pollutants for attainment/nonattainment decisions and to construct NAAQS maintenance plans; and 6) provide additional measurements of selected criteria and non-criteria pollutants to be used for evaluating population exposure to air toxics as well as criteria pollutants.

The original requirements called for two to five fixed sites per PAMS area depending on the area's population. Four types of PAMS sites were identified including upwind (Type 1), maximum precursor emission rate (Type 2), maximum O_3 concentration (Type 3), and extreme downwind (Type 4) sites. Each PAMS site was required to measure O_3, nitrogen oxide (NO), NO_2, speciated VOCs, selected carbonyl compounds, and selected meteorological parameters. In addition, upper air meteorological monitoring was required at one site in each PAMS area.

In the October 17, 2006 monitoring rule (71 FR 61236), the EPA revised the PAMS requirements to only require two sites per PAMS area. The intent of the revision was to "allow PAMS monitoring to be more customized to local data needs rather than meeting so many specific requirements common to all subject O_3 nonattainment areas; the changes also gave states the flexibility to reduce the overall size of their PAMS programs—within limits—and to use the associated resources for other types of monitoring they consider more useful." In addition to reducing the number of required sites per PAMS area, the 2006 revisions also limited the requirement for carbonyl measurements (specifically formaldehyde, acetaldehyde, and acetone)

to areas classified as serious or above for the 8-hour O_3 standards. This change was made in recognition of carbonyl sampling issues which were believed to cause significant uncertainty in the measured concentrations.

Twenty-two areas were classified as serious or above O_3 nonattainment at the time the PAMS requirements were promulgated in 1993. On July 18, 1997 (62 FR 38856), the EPA revised the averaging time of the O_3 NAAQS from a 1-hour averaging period to an 8-hour averaging period. On June 15, 2005 (70 FR 44470), the EPA revoked the 1-hour; however, PAMS requirements were identified as requirements that had to be retained in the anti-backsliding provisions included in that action. Therefore, PAMS requirements continue to be applicable to areas that were classified as serious or above nonattainment for the 1-hour O_3 standards as of June 15, 2004. Currently, 25 areas are subject to the PAMS requirements with a total of 75 sites. As will be discussed in detail later, the current PAMS sites are concentrated in the Northeast U.S. and California with relatively limited coverage in the rest of the country (Cavender, 2014).

The first PAMS sites began operation in 1994, and have been in operation for over 20 years. Since the start of the program, there have been many changes to the nature and scope of the O_3 problem in the U.S. as well as to our understanding of it. The O_3 standards has been revised multiple times since the PAMS program was first implemented. On July 18, 1997, the EPA revised the O_3 NAAQS to a level of 0.08 parts per million (ppm), with a form based on the 3-year average of the annual fourth-highest daily maximum 8-hour average O_3 concentration. On March 28, 2008 (73 FR 16436), the EPA revised the O_3 standards to a level of 0.075 ppm, with a form based on the 3-year average of the annual fourth-highest daily maximum 8-hour average O_3 concentration. These changes in the level and form of the O_3 NAAQS, along with notable

decreases in O_3 levels in most parts of the U.S., have changed the landscape of O_3 NAAQS violations in the U.S. At the time of the first round of designations for the 8-hour standards (June 15, 2005), only 5 areas were classified as serious or above for the 8-hour standards as compared to 22 areas that were classified as serious or above for the 1-hour standards. While the number of serious and above areas decreased, the number of nonattainment areas remained nearly the same. In addition to the change in the landscape of O_3 nonattainment issues, much of the equipment used at PAMS sites is outdated and in need of replacement. New technologies have been developed since the inception of the PAMS program that should be considered for use in the network to simplify procedures and improve data quality. For these reasons, the EPA determined that it would be appropriate to re-evaluate the PAMS program as explained below.

In 2011, the EPA initiated an effort to re-evaluate the PAMS requirements in light of changes in the needs of PAMS data users and the improvements in monitoring technology. The EPA consulted with the Clean Air Science Advisory Committee (CASAC), Air Monitoring and Methods Subcommittee (AMMS) to seek advice on potential revisions to the technical and regulatory aspects of the PAMS program; including changes to required measurements and associated network design requirements. The EPA also requested advice on appropriate technology, sampling frequency, and overall program objectives in the context of the most recently revised O_3 NAAQS and changes to atmospheric chemistry that have occurred over the past 10-15 years in the significantly impacted areas. The CASAC AMMS met on May 16 and May 17, 2011, and provided a report with their advice on the PAMS program on September 28, 2011 (U.S. EPA, 2011f). In addition, the EPA met multiple times with the National Association of Clean Air Agencies (NACAA) Monitoring Steering Committee (MSC) to seek advice on the PAMS program. The MSC includes monitoring experts from various State and local agencies

actively engaged in ambient air monitoring and many members of the MSC have direct experience with running PAMS sites. Specific advice obtained from the CASAC AMMS and the MSC that was considered in making the proposed changes to the PAMS requirements is discussed in the appropriate sections below.

Based on the findings of the PAMS evaluation and the consultations with the CASAC AMMS and NACAA MSC, the EPA proposed to revise several aspects of the PAMS monitoring requirements including changes in 1) network design, 2) VOC sampling, 3) carbonyl sampling, 4) nitrogen oxides sampling, and 5) meteorology measurements. The following paragraphs summarize the proposed changes, the comments received, and the final changes and supporting rationale.

1. Network Design

As discussed above, the current PAMS network design calls for two sites (a Type 2, and a Type 1 or Type 3) per PAMS area. In their report (U.S EPA, 2011f), the CASAC AMMS found "that the existing uniform national network design model for PAMS is outdated and too resource intensive," and recommended "that greater flexibility for network design and implementation of the PAMS program be transferred to state and local monitoring agencies to allow monitoring, research, and data analysis to be better tailored to the specific needs of each O_3 problem area." While stating that the current PAMS objectives were appropriate, the AMMS report also stated that "objectives may need to be revised to include both a national and regional focus because national objectives may be different from regional objectives." The NACAA MSC also advised the EPA that the existing PAMS requirements were too prescriptive and may hinder state efforts to collect other types of data that were more useful in understanding their local O_3 problems.

The EPA agrees with CASAC that the PAMS objectives include both local and national

objectives, and believes that the current PAMS network design is no longer suited for meeting either sets of objectives. As part of the PAMS evaluation, it was determined that at the national level the primary use of the PAMS data has been to evaluate photochemical model performance. Due to the locations of the current PAMS areas and the current network design, existing PAMS sites are clustered along the northeast and west coasts leading to significant redundancy in these areas and very limited coverage throughout the remainder of the country (Cavender, 2014). The resulting uneven spatial coverage greatly limits the value of the PAMS data for evaluation of model performance. CASAC (U.S. EPA, 2011f) noted the spatial coverage issue and advised that the EPA should consider requiring PAMS measurements in areas in addition to "areas classified as serious and above for the O_3 NAAQS to improve spatial coverage." The EPA also agrees with CASAC and NACAA that the PAMS requirements should be revised to provide monitoring agencies greater flexibility in meeting local objectives.

The EPA proposed changes to the network design requirements to better serve both national and local objectives. The EPA proposed a two part network design. The first part of the design included a network of fixed sites ("required PAMS sites") intended to support O_3 model development and the tracking of trends of important O_3 precursor concentrations. The second part of the network design required states with O_3 non-attainment areas to develop and implement Enhanced Monitoring Plans (EMPs) which were intended to allow monitoring agencies the needed flexibility to implement additional monitoring capabilities to suit the needs of their area.

To implement the fixed site portion of the network design, the EPA proposed to require PAMS measurements at any existing NCore site in an O_3 nonattainment area in lieu of the

current PAMS network design requirements.[222] The NCore network is a multi-pollutant monitoring network consisting of 80 sites (63 urban, 17 rural) sited in typical neighborhood scale locations and supports multiple air quality objectives including some of the objectives of the PAMS program including the development and evaluation of photochemical models (including both $PM_{2.5}$ and O_3 models), development and evaluation of control strategies, and the tracking of regional precursor trends.

The EPA recognized that in limited situations existing NCore sites may not be the most appropriate locations for making PAMS measurements. For example, an existing PAMS site in an O_3 nonattainment area may be sited at a different location than the existing NCore site. In this case, it may be appropriate to continue monitoring at the existing PAMS site to support ongoing research and to maintain trends information. To account for these situations, the EPA also proposed to provide the EPA Regional Administrator the authority to approve an alternative location for a required PAMS site where appropriate. The EPA also solicited comments on alternative frameworks using other benchmarks such as attainment status or population to ensure an appropriately sized fixed PAMS monitoring network. The EPA received several comments on the proposed changes to the network design, primarily from state and local monitoring agencies. The following paragraphs summarize the major comments made on the proposed network design, our response, and final network design requirements.

Most commenters agreed with the need to revise the existing network design. One commenter agreed that "requiring PAMS monitoring at already existing NCore locations will

[222] The EPA noted that the proposed change would expand the PAMS applicability beyond that required in 182(c)(1) of the CAA. Thus, in this final rule, the EPA is relying on the authority provided in Sections 103(c), 110(a)(2)(B), 114(a) and 301(a)(1) of the CAA to expand the PAMS applicability to areas other than those that are serious or above O_3 nonattainment.

benefit national and local objectives to understand ozone formation and would also provide significant cost efficiencies." Another commenter stated that they supported the proposed changes, "especially the flexibility provided by EMPs designed to meet local objectives and achieve a better understanding of photochemical precursors." Another commenter supporting the changes stated that the "proposed network revision will provide states the flexibility to use their resources effectively." One commenter stated that the proposed changes "reflect a more efficient use of state and local monitoring resources by availing monitoring agencies of existing NCore infrastructure to fulfill PAMS requirements."

A number of concerns were also raised with the proposed network design. Several commenters stated that the proposal "would drastically reduce the PAMS network in the Northeast." One commenter stated that "this is not acceptable for the Northeast and Mid-atlantic Corridor, which requires monitoring of the complex transport from multiple large metropolitan areas in the region." One commenter recognized that the EPA had intended to allow states to use EMPs to address upwind and downwind data needs, but raised concerns that states with historically important upwind and downwind sites in the Ozone Transport Region[223] (OTR) may not be required to develop an EMP since those sites would be in states that are attaining the O_3 NAAQS. One commenter suggested that "the EPA consider the entire OTR when designing a PAMS network rather than pockets of nonattainment areas in the region." The EPA agrees that the reduction of sites in the OTR is a potential issue and that many important existing PAMS sites would not be part of the required PAMS sites based on the proposed network design. As

[223] Section 184(c) of the CAA establishes the OTR as comprised of the states of Connecticut, Delaware, Maine, Maryland, Massachusetts, New Hampshire, New Jersey, New York, Pennsylvania, Rhode Island, Vermont, and Consolidated Metropolitan Statistical Area that includes the District of Columbia.

noted by several commenters, the EPA intended the state directed EMPs to give states flexibility in determining data needed to understand local O_3 formation, including transport in the Northeast. However, the EPA also agrees that as proposed many states in the OTR would not be required to develop EMPs and, therefore, may not be provided PAMS resources. To address these concerns and ensure adequate network coverage in the OTR, the EPA is adding a requirement that all states in the OTR develop and implement an EMP regardless of O_3 attainment status. This change will help ensure that an EMP appropriate for the entire OTR can be implemented.

Concerns were raised by some states that existing NCore sites may not be the most appropriate location for making PAMS measurements. One commenter noted that their NCore site was inland but that their "most significant ozone problems occur along the shoreline due to transport along the lake", and that "the NCore site cannot provide insight into these important lakeshore ozone processes." Another commenter stated that "while it was laudable to leverage sites where data is already being collected, it is unclear whether NCore sites adequately meet the objectives of the PAMS program", and that "the current NCore network may not be adequate to depict boundary conditions or areas of maximum emissions." One commenter stated that "in some nonattainment areas an NCore site may be an appropriate location for a PAMS monitor, but in other areas it would be preferable to install the PAMS monitoring in a location downwind of a source region where higher ozone exposures occur" and that "State and local boundaries should not be part of the network design criteria." One commenter noted that while the EPA had proposed to allow waivers, it was unclear if waivers would be allowed where the alternative site was in a different CBSA or state than the required PAMS site. As stated in our proposal, the EPA recognizes that in some cases existing PAMS sites (or other sites) may be better suited to meet

local and national data needs. For this reason, we had proposed to allow waivers in these situations. We do agree that it is appropriate in some cases to allow these waivers to cross CBSA and state boundaries. Therefore, we have added specific language to the final waiver provisions to clarify that waivers can be allowed to cross CBSA and state boundaries. Where a monitoring agency receives a waiver from siting a monitor in reliance on a monitor operated by a different monitoring agency (e.g., across state lines), the waiver will be conditioned on the monitor being properly included in the other agency's network plan, and operated in accordance with the requirements of Part 58, including the relevant appendices.

In addition to the concerns raised about closing important existing PAMS sites discussed above, some commenters raised concerns that many of the newly required PAMS sites would be in locations that were expected to attain the revised O_3 NAAQS soon after the new sites would be installed. One commenter noted that "requiring marginal nonattainment areas to install PAMS sites would result in a large undertaking at an area that would most likely be back in attainment at or around the time the PAMS site started collecting data." One commenter stated that by tying the network requirement to NAAQS attainment "threatens to underserve areas that are very close to exceeding the revised ozone NAAQS and results in significant gaps in the spatial coverage of the PAMS network" and "has the potential to introduce undesirable uncertainty on the size and spatial extent of the PAMS network over the long term." Another commenter was concerned that the proposed network would be unstable, and would experience frequent changes as areas came into attainment or went out of attainment thus reducing the value of the data collected, and resulting in inefficient use of resources. One commenter noted that "a more stable monitoring network design will allow for the examination of trends from spatially robust, long running sites and will allow states to firmly establish the infrastructure costs."

The EPA noted in the proposal that the size and locations of the proposed required PAMS network is sensitive to the level of the revised O_3 NAAQS and future O_3 concentrations. We recognize and agree that if current downward trends in O_3 concentrations continue, many initially required sites may no longer be required to make PAMS measurements soon after the sites were installed. Non-required sites could be closed, soon after being installed, at the state's discretion. We agree this would result in an inefficient use of resources. We also note that if these sites were closed following a potential reclassification to attainment, the loss of those sites could lead to a network with poor spatial coverage. Therefore, the EPA is making changes to the proposed revisions to the network design to improve the stability of the fixed site network. As explained below, the final requirements are based on options for which we requested comments in the proposal and the comments we have received.

We requested comments on additional options to define the fixed PAMS network component of the new network design. These options were further discussed in a memorandum to the docket (Cavender, 2014). One option discussed was to require PAMS measurements at all NCore sites irrespective of the O_3 attainment status of the area. One commenter noted that "requiring PAMS monitoring at all NCore sites, regardless of ozone attainment status, provides the most spatially robust and stable monitoring network." We noted that this requirement would result in a network of approximately 80 sites, which would be larger than the current network. In the supporting memorandum, we noted that a fixed network of 80 sites would strain existing resources and would not allow adequate resources to implement the state directed EMPs.

Another option discussed in the proposal included requiring PAMS measurements at NCore sites in O_3 nonattainment areas with a population greater than 1,000,000. We noted that this option would result in a network of between 31 and 37 sites depending on the level of the

revised O_3 NAAQS. We also noted that focusing the applicability of PAMS to those NCore sites in larger CBSAs would still provide the desired improvement in geographic distribution while reducing the number of required sites down to a level that would provide sufficient resources to implement the state-directed EMP portion of the network. One commenter stated that they "supported a 1,000,000 population threshold because it would help prioritize resources to areas based on the greatest human health impacts." In addition, a number of commenters, while not commenting on the need for a population limit, did raise concerns about their ability to acquire and retain staff with the necessary expertise to collect PAMS measurements in less urbanized areas. As with the proposed network design, we recognize that the total number of sites and the ultimate spatial coverage under this option is also sensitive to changes in O_3 concentrations. If current downward trends in O_3 concentrations continue, many initially required sites would not be required soon after they were installed. As with the proposed option, this option could result in an unstable network resulting in an inefficient use of resources and inadequate spatial coverage to meet the network goals discussed above.

Upon further consideration and in response to the comments received, we are finalizing a network design that includes a requirement for states to make PAMS measurements at all NCore sites in CBSAs with a population of 1,000,000 people or more, irrespective of O_3 attainment status. We believe this requirement will result in an appropriately sized network (roughly 40 sites) that will provide adequate spatial coverage to meet national model evaluation needs (Cavender, 2015). Redundancy is greatly reduced while important network coverage is added in the midwest, southeast, and mountain west. The improved spatial coverage will also strengthen the EPA's ability to track trends in precursor concentrations regionally.

Because the network requirement is not tied to attainment status, this final requirement

will ensure network stability and allows for more efficient use of available resources. This final requirement also removes uncertainty as to applicability and aids planning and logistics involved with implementing the new requirements. Monitoring agencies can determine the applicability of the fixed site requirements to their areas today, and begin to make plans for investments in equipment, shelter improvements, and staffing and training needs necessary to implement the fixed site requirements without having to wait for the designations process to be completed. In addition, this final requirement should alleviate concerns raised by monitoring agencies in more rural locations over the ability to attract and retain staff with the skills necessary to make PAMS measurements.

By adding the PAMS measurements to existing NCore sites, significant efficiencies can be obtained which should further reduce the costs of the fixed site network as NCore sites currently make many of the PAMS measurements. Furthermore, adding the additional PAMS measurements (e.g., speciated VOCs, carbonyls, and mixing height) to existing NCore sites will improve our ability to assess other pollutants (e.g., air toxics and $PM_{2.5}$).

Although, as discussed in comment and summarized above, we believe there are good reasons for not tying the requirement for fixed PAMS sites to O_3 attainment status, we continue to believe that requiring PAMS measurements in areas that historically have had low O_3 concentrations is unlikely to provide data of significant value to warrant the expense and effort of making such measurements. Therefore, we have included a provision that would allow a monitoring agency to obtain a waiver, based on Regional Administrator approval, in instances where CBSA-wide O_3 design values are equal to or less than 85% of the 8-hour O_3 NAAQS and where the site is not considered an important upwind or downwind site for other nonattainment areas. The EPA selected 85% as the threshold for this waiver provision as it has been used

historically to identify locations needing additional monitoring for both the O_3 and $PM_{2.5}$ NAAQS. The EPA will work with the monitoring agencies and the Regions to help ensure consistent implementation of this waiver provision.

The second part of the proposed PAMS network design included monitoring agency directed enhanced O_3 monitoring activities intended to provide data needed to understand an area's specific O_3 issues. To implement this part of the PAMS network design, the EPA proposed to add a requirement for states with O_3 nonattainment areas to develop an EMP. The purpose of the EMP was to improve monitoring for ambient concentrations of O_3, NO_x, total reactive nitrogen (NO_y)[224], VOC, and meteorology. The EPA suggested that types of activities that might be included in the state's EMP could include additional PAMS sites (e.g., upwind or downwind sites), additional O_3 and NO_x monitoring, ozonesondes or other aloft measurements, rural measurements, mobile PAMS sites, additional meteorological measurements, and episodic or intensive studies. The intent of the EMPs is to allow monitoring agencies flexibility in determining and collecting the information they need to understand their specific O_3 problems.

We received comments on the proposed requirement for an EMP in states with O_3 nonattainment areas. Most comments supported the requirement, but other comments raised a number of concerns. A number of commenters questioned the need for EMPs in Marginal and Moderate O_3 nonattainment areas. They noted that in most cases, Marginal O_3 nonattainment areas were expected to come into compliance without state-specific controls. One commenter stated that "nonattainment areas projected to attain the standard without additional state-level actions may not need the PAMS resources and additional monitoring to develop a better understanding of their ozone issues." One commenter noted that "marginal ozone nonattainment

[224] NO_y includes NO, NO_2, and other oxidized nitrogen compounds (NO_z).

areas are given only a few requirements because it is assumed that the areas will reach attainment within three years." Another commenter stated "requiring enhanced monitoring for any marginal or moderate area should only be implemented where such analyses show the need for this data." The EPA agrees that based on current trends in O_3 concentrations and the EPA's own projections, states in Marginal nonattainment areas likely will comply with the revised NAAQS without additional state-directed controls, and as such, an EMP is not necessary in Marginal O_3 attainment areas. Accordingly, the EPA is finalizing a requirement for EMPs in areas classified as Moderate or above O_3 nonattainment and, thereby, removing the applicability of the requirement for Marginal areas. We believe this final requirement will provide the desired flexibility to allow states to identify enhanced monitoring needs while focusing resources for EMPs in areas of greater need of enhanced monitoring data.

Commenters expressed concerns over the lack of detail on what an approvable EMP would entail. As proposed, the EMPs would be reviewed and approved by the EPA Regional Administrator as part of the annual monitoring plan review process. One commenter recommended that the "EPA detail the requirements of the EMPs for ozone nonattainment areas in future implementation guidance." One commenter stated that the "EPA should provide some coordination between regional offices and technical guidance to state agencies that would be of assistance in developing and executing the EMPs." The requirements for the EMPs were intentionally left quite general in order to maximize the flexibility for states in identifying their specific data needs. Regional approval of the plans is required to ensure the enhanced monitoring planned will be commensurate with grant funds provided for EMPs. Nonetheless, the EPA understands the need for guidance on developing EMPs and commits to working with monitoring agencies and the regions to develop appropriate guidance on developing and

reviewing EMPs.

2. Speciated VOC Measurements

Measurement of speciated VOCs important to O_3 formation is a key aspect of the PAMS program. The existing PAMS requirements allow for a number of options in measuring speciated VOCs at PAMS sites which include 1) hourly measurements using an automatic gas chromatograph ("autoGC"), 2) eight 3-hour samples daily using canisters, or 3) one morning and one afternoon sample with a 3-hour or less averaging time daily using canisters plus continuous Total Non-methane Hydrocarbon (TNMHC) measurements.

The EPA believes that the current options provided for VOC measurement limit the comparative value of the data being collected, and proposed that required PAMS sites must measure and report hourly speciated VOCs, which effectively would require them to use an autoGC to measure VOCs in lieu of canisters. More complete and consistent speciated VOC data nationally would better help meet certain objectives of the PAMS program described above (e.g., a speciated ambient air database useful in evaluating control strategies, analyzing emissions inventory issues, corroborating progress toward attainment, and evaluating population exposure to air toxics). Furthermore, as noted by the CASAC AMMS, hourly VOC data are "particularly useful in evaluating air quality models and performing diagnostic emission attribution studies. These data can be provided on a near real-time basis and presented along with other precursor species (e.g., oxides of nitrogen and carbon monoxide) collected over similar averaging times." Longer time-averaged data are of significantly lower value for model evaluation. In addition, creating consistent monitoring requirements across the network would provide better data for analyzing regional trends and spatial patterns.

At the time the original PAMS requirements were promulgated, the canister options were

included because the EPA recognized that the technologies necessary to measure hourly average speciated VOCs concentrations were relatively new and may not have been suitable for broad network use. At that time, GCs designed for laboratory use were equipped with auto-samplers designed to "trap" the VOC compounds from a gas sample, and then "purge" the compounds onto the GC column. The EPA did not believe that autoGCs were universally appropriate due to the technical skill and effort necessary at that time to properly operate an autoGC.

While the basic principles of autoGC technology have not changed, the hardware and software of modern autoGCs are greatly improved over that available at the time of the original PAMS requirements. Based on advice from the CASAC AMMS, the EPA initiated an evaluation of current autoGCs potentially suitable for use in the PAMS network. Based on the preliminary results, the EPA believes that typical site operators, with appropriate training, will have the skill necessary to operate a modern autoGC successfully. Considering the advances in autoGC technology, the added value obtained from hourly data, and the proposed move of PAMS measurements to NCore sites in O_3 nonattainment areas, the EPA proposed to require hourly speciated VOC sampling at all PAMS sites. The EPA noted that this proposed requirement would effectively prevent the use of canisters to collect speciated VOCs at the required PAMS sites but that canister sampling may continue to be an appropriate method for collecting speciated VOCs at other locations as part of discretionary monitoring designed within the EMPs.

While the EPA believes that the proposed transition to hourly speciated VOC sampling is the appropriate strategy to take advantage of improved technology and to broaden the utility of collected data, we are also mindful of the additional rigidity that the proposed mandatory use of autoGCs may have for monitoring agencies, especially those that have experience with and have established effective and reliable canister sampling programs. Therefore, the EPA requested

comment on the proposed requirement for hourly VOC sampling as well as the range of alternatives that might be appropriate in lieu of a strict requirement.

The EPA received a number of comments on the requirement to measure hourly VOCs at required PAMS sites. Many commenters agreed with requiring hourly VOC data. One commenter agreed that "hourly VOC data collection is the most appropriate and useful for PAMS monitors" and that "it is only appropriate to approve an alternative data collection interval if it is believed that the high ozone in an area is due to other pollutants, such as NO_x or methane." One commenter stated they "supported the movement towards hourly PAMS VOC speciated measurements with flexibility to use canisters if programmatic or logistical needs indicate."

However, some commenters raised concerns with the hourly VOC requirement. Some commenters questioned if autoGCs would be capable of measuring important VOC species in their environment. One commenter noted that in their location (high desert) "the largest VOC present in our inventory is creosote, a compound not commonly measured with this instrumentation." One commenter stated that the "Southeastern United States is dominated by biogenic VOC emissions" and questioned "the benefits of an autoGC in understanding ozone formation in any potential nonattainment area in our State."[225] Some questioned the detection capabilities of autoGCs as compared to canister sampling. One commenter found that the method detection limit (MDL) for their canister sampling was "consistently equal to or less than the autoGC instrumentation" based on the EPA's autoGC evaluation laboratory report (RTI, 2014). Another commenter noted that the MDLs for many of the compounds and systems reported in the laboratory report were too high to be useful at PAMS sites. Another commenter stated that

[225] The EPA notes that isoprene (the dominant biogenic compound in the Southeast) is well measured using autoGCs. The EPA is also evaluating the potential of modern autoGC's to measure alpha and beta pinene; however that work is not complete.

they found that "retention-time shifts made it difficult for instant identification of chemical peaks" and that "states should be allowed the flexibility to continue using canisters instead of autoGC."

As noted in the preamble, and the comments received, the EPA is currently completing an evaluation of commercially available autoGCs. A copy of the report for the laboratory phase of the study is available in the docket (RTI, 2014). As noted in the laboratory report, the MDL estimates made for the laboratory study were not conducted according to normal MDL testing procedures and as such the results should only be used to compare the various instruments being tested against each other[226]. As part of the evaluation, the EPA identified the manufacturer's specifications for MDL. Most of the systems that are being evaluated have a manufacturer's estimated MDL in the range of 0.1 ppb to 0.5 ppb. Based on the evaluation of MDL capabilities and typical ambient concentrations of O_3 precursors, the EPA believes that autoGCs are an appropriate method for gathering VOC data at most urban locations. However, canister sampling may be more appropriate in locations with low VOC concentrations.

For the reasons discussed above and in the proposed rule, the EPA is finalizing a requirement for hourly speciated VOC measurements at required PAMS sites. The EPA believes that hourly VOC measurements will provide a more complete and consistent speciated VOC database to help meet the PAMS program objectives described above. Hourly VOC data are

[226] Several factors combined to result in the high relative MDL estimates reported in laboratory report. The MDL testing in the laboratory was conducted during concurrent tests for interferences from humidity and temperature. In addition, the MDL testing was conducted at relatively high concentrations compared to the concentrations testing would be conducted at for conventional MDL testing. Finally, as noted in the laboratory report, a number of instruments were having technical difficulties during the testing which greatly impacted their MDL results. The EPA is continuing the autoGC evaluation and has conducted a field study during the summer of 2015. A final report is expected in early 2016.

particularly useful in evaluating air quality models and performing diagnostic emission attribution studies. Longer time-averaged data are of lower value for model evaluation. Consistent monitoring requirements across the network will provide better data for analyzing regional trends and spatial patterns.

However, the EPA agrees that there may be locations where an autoGC may not be the most appropriate method for VOC measurement and that it is appropriate to allow for canister sampling in limited situations. Accordingly, the EPA is adding a waiver option (to be approved by the EPA Regional Administrator) to allow three 8-hour average samples every 3rd day as an alternative in cases where VOCs are not well measured by autoGC due to low concentrations of target compounds or where the predominant VOC compounds cannot be measured using autoGC technology (e.g., creosote in high desert environments). This alternative sampling frequency was selected to be consistent with the sampling frequency selected for carbonyls, which is discussed later in this preamble.

3. Carbonyl Measurements

Carbonyls include a number of compounds important to O_3 formation that cannot currently be measured using the autoGCs or canisters used at PAMS sites to measure speciated VOCs. The current method for measuring carbonyls in the PAMS program is Compendium Method TO-11A (U.S. EPA, 1999). In this method, carbonyl compounds are adsorbed and converted into stable hydrazones using dinitrophenylhydrazine (DNPH) cartridges. These cartridges are then analyzed for the individual carbonyl compounds using liquid chromatography (LC) techniques. Three carbonyls are currently required to be measured in the PAMS program - formaldehyde, acetaldehyde, and acetone.

In 2006, the EPA revised the PAMS requirements such that carbonyl sampling was only

required in areas classified as serious or above nonattainment for O_3 under the 8-hour O_3 standard which effectively reduced the applicability of carbonyl sampling to a few areas in California. This change was made in recognition that there were a number of issues with Method TO-11A that raised concerns with the uncertainty in the carbonyl data being collected. These issues include interferences (humidity and O_3) and breakthrough (i.e., overloading of the DNPH cartridge) at high concentrations. While solutions for these issues have been investigated, these improvements have not been incorporated into Method TO-11A.

A recent evaluation of the importance of VOCs and carbonyls to O_3 formation determined that carbonyls, especially formaldehyde, are very important to O_3 formation (Cavender, 2013). CASAC AMMS (U.S. EPA, 2011f) also noted the importance of carbonyls stating that "There are many compelling scientific reasons to measure carbonyls. They are a very important part of O_3 chemistry almost everywhere." Although the EPA recognizes the issues that have been raised about the current method of measuring carbonyls, due to the importance of carbonyls to understanding O_3 chemistry, the EPA proposed to require all required PAMS sites to measure carbonyls.

Several commenters agreed with the need for carbonyl data at PAMS sites. However, a number of commenters questioned the proposed frequency of eight 3-hour samples every day during the PAMS sampling season (June through August). Several commenters indicated that the frequency was too high. One commenter noted that the requirement would require 800 samples per season at each PAMS site and pointed out that this requirement, which was required at the inception of the PAMS program in the 1990s was "found to be prohibitively expensive, technically unsustainable, and qualitatively compromised." Another commenter stated that "this level of sampling would require a substantial amount of agency resources and seems unduly

burdensome." A number of commenters also questioned the commercial availability of an 8-channel carbonyl sampler that would be needed to take eight 3-hour samples daily. In light of the comments and upon further review, the EPA agrees that the proposed frequency is unduly burdensome and is finalizing a requirement with a lower frequency.

A number of alternative frequencies were suggested in the comments. Several commenters suggested a frequency of three 8-hour samples on either a 1-in-6 day or 1-in-3 day basis. Another commenter suggested a frequency of eight 3-hour samples on a 1 in 6 day basis. The EPA notes that sampling on a 1-in-6 day frequency would lead to as little as 15 sampling days per PAMS sampling season. The EPA believes that 15 sampling days is too few to provide a meaningful representation of carbonyl concentrations over the PAMS sampling period. A sampling frequency of 1-in-3 days would lead to 30 sampling days per season with each day of the week being represented at least 4 times per sampling season. With regards to samples per day, a 3-hour sampling duration provides a better diurnal representation of carbonyl sampling compared with an 8-hour sampling duration; however 8-hour sampling can provide information useful for evaluating diurnal differences in carbonyl concentrations. Upon further consideration and in light of the comments received, the EPA is finalizing a carbonyl sampling requirement with a frequency of three 8-hour samples on a 1-in-3 day basis. This final requirement will result in approximately 90 samples per PAMS sampling season which the EPA believes is not unduly burdensome and will provide a reasonable representation of carbonyl concentrations.

A number of commenters noted the ongoing development of continuous formaldehyde instruments, and recommended that EPA allow for continuous formaldehyde measurements as an alternative to the manual cartridge based TO-11A method. The EPA agrees that continuous formaldehyde, with the ability to obtain hourly averaged measurements, would be a significantly

more valuable that the longer averaged measurements. As a result, the EPA has added an option to allow for continuous formaldehyde as an alternative to the carbonyl measurements using TO-11A.

4. Nitrogen Oxides Measurements

It is well known that NO and NO_2 play important roles in O_3 formation (U.S. EPA, 2013, Section 3.2.2). Under the current network design, Type 2 PAMS sites are required to measure NO_x (which by definition is the sum of NO and NO_2), and Types 1, 3, and 4 sites are required to measure NO_y. NCore sites are currently required to measure NO_y but are not required to measure NO_2 separately.

In conventional NO_x analyzers, NO_2 is determined as the difference between the measured NO and NO_x concentrations. However, due to the non-selective reduction of oxidized nitrogen compounds by the molybedenum converter used in conventional NO_x monitors, the NO_2 measurement made by conventional NO_x monitors can be biased high due to the varying presence of NOz compounds that may be reported as NO_2. The unknown bias from the NOz compounds is undesirable when attempting to understand O_3 chemistry.

Improvements in reactive nitrogen measurements have been made since the original PAMS requirements were promulgated that allow for improved NO_2 measurements. Selective photolytic converters have been developed that are not significantly biased by NOz compounds (Ryerson et al., 2000). Monitors using photolytic converters are commercially available and have been approved as FEMs for the measurement of NO_2. In addition, methods that directly read NO_2 have been developed that allow for very accurate readings of NO_2 without some of the issues inherent to the “difference method” used in converter-based NO_x analyzers. However, these direct reading NO_2 analyzers generally do not provide an NO estimate, and would need to

be paired with a converter-based NO_x monitor or NO_y monitor in order to also measure NO.

As discussed above, the EPA is finalizing a PAMS network design such that PAMS measurements will be required at existing NCore sites in CBSAs with a population of 1,000,000 people or more. NCore sites currently are required to measure NO and NO_y. NCore sites are not currently required to measure NO_2. Due to the importance of accurate NO_2 data to the understanding of O_3 formation, the EPA proposed to require NO_2 measurements at required PAMS sites. Since existing NCore sites currently measure NO_y, either a direct reading NO_2 analyzer or a photolytic-converter NO_x analyzer could be used to meet the proposed requirement. The EPA believes conventional NO_x analyzers would not be appropriate for making PAMS measurements due to the uncertainty caused by interferences from NO_z compounds.

A number of commenters questioned the need for both NO_y and NO_2 measurements at PAMS sites. One commenter stated that "in dense urban areas an $NO/NO_2/NO_x$ instrument may be adequate but in a more rural area an NO/NO_y instrument may be preferable." Another commenter stated that due to the size of the grid cells used in grid models that "the impact of NOz interferences would be very small compared to other modeling uncertainties such as emission inventories and mixing heights." Another commenter suggested that "EPA should provide clear and specific guidance on how agencies can request that the NO_y monitoring be eliminated from the NCore suite based on comparative data between the NO_2 and NO_y monitors."

The comments suggest that the model's ability to simulate the partitioning of reactive nitrogen is unimportant because there may be other errors in the model. The EPA believes that measurements should be routinely collected so that it can be demonstrated that the chemistry, meteorology, and emissions in the model are all of sufficient reliability for use in informing air

quality management decisions. Monitoring sites rarely fall into simple categories of urban or rural, and the speciation of NO_y varies considerably as a function of meteorology and time of day at a given site. The state-of-the-science in regulatory air quality modeling is such that accurate measurements of key O_3 precursors must be available to demonstrate the credibility of the model predictions. The increased availability of special field study observations is leading to increased scrutiny of the chemical mechanisms used in regulatory modeling. Comprehensive and accurate measurement sites are needed to demonstrate the adequacy of the models and to respond to these challenges.

Measurements of NO, NO_2, and NO_y concentrations are critical to understanding atmospheric aging and photochemistry. These measurements will provide essential information about whether NO_y compounds are fresh or aged which is important for understanding both local photochemistry (i.e. through indicator ratios to distinguish NO_x vs VOC limited conditions) as well as for characterizing transport from upwind regions. These evaluations may be conducted using observations, box modeling or through complex photochemical grid based modeling. Accurate speciated and total NO_y measurements are necessary for all three types of analysis. For these reasons, the EPA is finalizing the requirement for required PAMS sites to measure true NO_2 in addition to NO and NO_y.

5. Meteorology Measurements

The current PAMS requirements require monitoring agencies to collect surface meteorology at all required PAMS sites. As noted in the EPA's Technical Assistance Document (U.S. EPA, 1998) for the PAMS program, the PAMS requirements do not provide specific surface meteorological parameters to be monitored. As part of the implementation efforts for the original PAMS program, a list of recommended parameters was developed and incorporated into

the TAD which includes wind direction, wind speed, temperature, humidity, atmospheric pressure, precipitation, solar radiation, and ultraviolet (UV) radiation. Currently, NCore sites are required to measure the above parameters with the exceptions of atmospheric pressure, precipitation, solar radiation, and UV radiation. In recognition of the importance of these additional measurements for understanding O_3 formation, the EPA proposed to specify that required PAMS sites are required to collect wind direction, wind speed, temperature, humidity, atmospheric pressure, precipitation, solar radiation, and UV radiation. Since NCore sites are currently required to measure several of these surface meteorological parameters, the net impact of the proposal was to add the requirement for the monitoring of atmospheric pressure, precipitation, solar radiation, and UV radiation at affected NCore sites. The EPA received no significant comments on this portion of the proposal, and therefore is finalizing the requirement as proposed.

The existing PAMS requirements also require the collection of upper air meteorological measurements at one site in each PAMS area. The term upper air meteorological is not well defined in the existing PAMS requirements. As part of the implementation efforts for the original PAMS program, mixing height was added to the PAMS TAD as a recommended meteorological parameter to be monitored. Most monitoring agencies installed radar profilers to meet the requirement to collect upper air meteorology. Radar profilers provide data on wind direction and speed at multiple heights in the atmosphere. Radio acoustic sounding system (RASS) profilers are often included with radar profilers to obtain atmospheric temperature at multiple heights in the atmosphere and to estimate mixing height. The EPA recognizes that the upper air data on wind speed and wind direction from radar profilers can be very useful in O_3 modeling. However, many of the current PAMS radar profilers are old and in need of replacement or expensive

maintenance. In addition, the cost to install and operate radar profilers at all required PAMS sites would be prohibitive. Therefore, the EPA did not propose to add upper air wind speed and direction as required meteorological parameters to be monitored at required PAMS sites. Where monitoring agencies find the radar profiler data valuable, continued operation of existing radar profilers or the installation of new radar profilers would be appropriate to consider as part of the state's EMP.

As discussed above, mixing height is one upper air meteorological measurement that has historically been measured at PAMS sites. A number of methods can be used to measure mixing height in addition to radar profiler technology discussed above. Recent developments in ceilometer technology allow for the measurement of mixing height by changes in particulate concentrations at the top of the boundary layer (Eresmaa et al., 2006). Ceilometers provide the potential for continuous mixing height data at a fraction of the cost of radar profilers. Due to the importance of mixing height measurements for O_3 modeling, the EPA proposed to add the requirement for monitoring agencies to measure mixing height at required PAMS sites.

A number of commenters questioned the need for mixing height measurements at PAMS sites. One commenter stated, "the photochemical modeling community has a long history of relying upon National Weather Service measurements for mixing height." Another commenter stated that "in some areas of the country the models used to predict mixing height are adequate, but in other mountainous or marine areas model-predicted mixing height data is inadequate." Accurate estimates of mixing height are important for appropriately characterizing concentrations of O_3 and O_3 precursors. Mixing height is also important for characterizing how modeled O_3 may change as a result of changing NO_x and VOC concentrations. For instance, if the modeled mixing height is too low causing unrealistically high concentration of NO_x, then O_3

destruction could be predicted when O_3 production may be happening in the atmosphere. When this or the opposite situation exists in modeling it may lead O_3 response to emissions changes that are less reliable for air quality planning purposes. While models are believed to do a reasonable job of predicting mixing height during the day, there is considerably more uncertainty in predicting this parameter during morning and evening transition periods and at night. Model O_3 predictions are particularly sensitive to mixing height during the time periods for which uncertainty in this parameter is greatest.

Several commenters noted that nearby National Oceanic and Atmospheric Administration (NOAA) Automated Surface Observing System (ASOS) sites may be a better alternative for collection of mixing height data. As indicated in the proposal, the EPA is aware of the network of ceilometers operated by NOAA as part of ASOS. The EPA has been in discussions with NOAA regarding the potential for these systems to provide the needed mixing height data. However, the ASOS ceilometers are not currently equipped to provide mixing height data and NOAA has no current plans to measure continuous mixing height in the future. Nonetheless, the EPA will continue to work with NOAA to determine if the ASOS ceilometers can be upgraded to meet the need for mixing height data, and included proposed regulatory language that will allow states a waiver to use nearby mixing height data from ASOS (or other sources) to meet the requirement to collect mixing height data at required PAMS sites when such data are suitable and available.

The EPA is finalizing the requirement for the measurement of mixing height at required PAMS sites due to the importance of mixing height in O_3 modeling. A waiver option, to be approved by the Regional Administrator, is also being included to allow mixing height measurements to be obtained from other nearby sites (e.g., NOAA ASOS sites).

6. PAMS Season

Currently, PAMS measurements are required to be taken during the months of June, July, and August. This 3-month period is referred to as the "PAMS Season." As part of the PAMS re-evaluation, the EPA considered changes to the PAMS season. The 3-month PAMS season was originally selected to represent the most active period for O_3 formation. However, the EPA notes that in many areas the highest O_3 concentrations are observed outside of the PAMS season. As an example, the highest O_3 concentrations in the mountain-west often occur during the winter months. Data collected during the current PAMS season would have limited value in understanding winter O_3 episodes.

The CASAC AMMS (U.S. EPA, 2011f) noted in their report to the EPA that "it would be desirable to extend the PAMS monitoring season beyond the current June, July, August sampling period." But that "the monitoring season should not be mandated and rigid; it should be flexible and adopted and coordinated on a regional airshed basis." The EPA agrees with CASAC on the need for flexibility in determining when PAMS measurements should be taken to meet local monitoring needs but also agrees with CASAC that the flexibility "should not conflict with national goals for the PAMS program." A significant benefit of the standard PAMS season is that it ensures data availability from all PAMS sites for national- or regional-scale modeling efforts.

While the EPA agrees with the potential benefit of extending the availability of PAMS measurements outside of the current season, we also considered the burden of requiring monitoring agencies to operate additional PAMS measurements (e.g., hourly speciated VOC) for periods that in some cases, might be much longer than the current 3-month season, for example, if the PAMS season was extended to match each state's required O_3 monitoring season. Being mindful of the potential burden associated with a lengthening of the PAMS season as well as the

potential benefits of the additional data, the EPA proposed to maintain the current 3-month PAMS monitoring season for required PAMS sites rather than extending the PAMS season to other periods where elevated O_3 may be expected. No significant comments were received on the proposed PAMS season, and as such, for the reasons stated here and in the proposal, the EPA is not changing the 3-month PAMS season of June, July, and August.

The EPA believes that the 3-month PAMS season will provide a consistent data set of O_3 and O_3 precursor measurements for addressing the national PAMS objectives. Monitoring agencies are strongly encouraged to consider collecting PAMS measurements in additional periods beyond the required PAMS season as part of their EMP. The monitoring agencies should consider factors such as the periods of expected peak O_3 concentrations and regional consistency when determining potential expansion of their specific monitoring periods beyond the required PAMS season.

7. Timing and Other Implementation Issues

The EPA recognizes that the changes to the PAMS requirements will require resources and a reasonable timeline in order to be successfully implemented. The PAMS program is funded, in part, as part of the EPA's section 105 grants. The EPA believes that the current national funding level of the PAMS program is sufficient to support these final changes, but changes in the distribution of PAMS funds will need to be made. The network design changes will require some monitoring agencies to start collection of new PAMS measurements, while other monitoring agencies will see reductions in PAMS measurement requirements. The EPA will work with the NAACA, AAPCA, and other monitoring agencies to develop an appropriate PAMS grant distribution strategy.

In addition to resources, the affected monitoring agencies will need time to implement the

revised PAMS requirements. For the required PAMS sites, monitoring agencies can determine now which NCore sites will be required to make PAMS measurements based on readily available census data. However, monitoring agencies will still need time to evaluate and seek approval for alternative sites or alternative VOC methods. In addition, monitoring agencies will need time to make capital investments (primarily for the installation of autoGCs, NO_2 monitors, and ceilometers), prepare appropriate QA documents, and develop the expertise needed to successfully collect PAMS measurements via training or otherwise. In order to ensure monitoring agencies have adequate time to plan and successfully implement the revised PAMS requirements, the EPA is requiring that monitoring agencies identify their plans to implement the PAMS measurements at NCore sites in their Annual Network Plan due July 1, 2018, and to begin making PAMS measurements at NCore sites by June 1, 2019. The EPA believes some monitoring agencies may be able to begin making PAMS measurements sooner than June 2019 and encourages early deployment where possible.

Monitoring agencies will need to wait until O_3 designations are made to officially determine the applicability of the EMP requirement. The EPA proposed to allow two years after designations to develop EMPs, and that the EMPs would be submitted as part of their Annual Network Plan. Several commenters stated that due to the level of planning and coordination required for the EMPs, that the plans should instead be included as part of the 5-year network assessment. While the EPA agrees that the EMPs will require a substantial amount of planning and coordination, the next 5 year network assessment will not be due until July 1, 2020 – nearly 5 years from the date of this final rulemaking. The EPA believes that it would be inappropriate to wait 5-years from the date of this rulemaking to develop plans for enhanced O_3 monitoring. In addition, the EPA believes that the first round of EMP development should receive additional

focus and review that may not be afforded as part of the larger network assessment. Finally, most monitoring agencies will be aware of their likely O_3 attainment status well in advance of the official designations. In order to ensure timely development of the initial EMPs, the EPA is requiring affected monitoring agencies to submit their initial EMPs no later than two years following designations. States in the OTR do not need to wait until designations to determine EMP applicability and may not be classified as Moderate or above. As such, the final rule includes a requirement for states in the OTR to submit their initial EMPs by October 1, 2019 (which is consistent with the expected timeline for the remaining EMPs). However, subsequent review and revisions to the EMPs are to be made as part of the 5-year network assessments beginning with the assessments due in 2025.

D. Addition of a New FRM for O_3

The use of FRM analyzers for the collection of air monitoring data provides uniform, reproducible measurements of concentrations of criteria pollutants in ambient air. FRMs for various pollutants are described in several appendixes to 40 CFR part 50. For most gaseous criteria pollutants (including O_3 in Appendix D of part 50), the FRM is described as a particular measurement principle and calibration procedure to be implemented, with further reference to specific analyzer performance requirements specified in 40 CFR part 53.

The EPA allows new or alternative monitoring technologies – identified as FEMs – to be used in lieu of FRMs, provided that such alternative methods produce measurements closely comparable to corresponding FRM measurements. Part 53 sets forth the specific performance requirements as well as the performance test procedures required by the EPA for determining and designating both FRM and FEM analyzers by brand and model.

To be used in a determination of compliance with the O_3 NAAQS, ambient O_3 monitoring

data must be obtained using either a FRM or a FEM, as defined in parts 50 and 53. For O_3, nearly all the monitoring methods currently used by state and local monitoring agencies are FEM (not FRM) continuous analyzers that utilize an alternative measurement principle based on quantitative measurement of the absorption of UV light by O_3. This type of O_3 analyzer was introduced into monitoring networks in the 1980s and has since become the predominant type of method used because of its all-optoelectronic design and its ease of installation and operation.

The existing O_3 FRM specifies a measurement principle based on quantitative measurement of chemiluminescence from the reaction of ambient O_3 with ethylene (ET-CL). Ozone analyzers based on this FRM principle were once widely deployed in monitoring networks, but now they are no longer used for routine O_3 field monitoring because readily available UV-type FEMs are substantially less difficult to install and operate. In fact, the extent of the utilization of UV-type FEMs over FRMs for O_3 monitoring is such that FRM analyzers have now become commercially unavailable. The last new commercial FRM analyzer was designated by the EPA in 1979. The current list of all approved FRMs and FEMs capable of providing ambient O_3 data for use in NAAQS attainment decisions may be found on the EPA's website and in the docket for this action (U.S. EPA, 2014e). However, that list does not indicate whether or not each listed method is still commercially available.

1. Proposed Changes to the FRM for O_3

Although the existing O_3 FRM is still a technically sound methodology, the lack of commercially available FRM O_3 analyzers severely impedes the use of FRM analyzers, which are needed for quality control purposes and as the standard to which candidate FEMs are required to be compared. Therefore, the EPA proposed to establish a new FRM measurement technique for O_3 based on NO-chemiluminescence (NO-CL) methodology. This new

chemiluminescence technique is very similar to the existing ET-CL methodology with respect to operating principle, so the EPA proposed to incorporate it into the existing O_3 FRM as a variation of the existing ET-CL methodology, coupled with the same existing FRM calibration procedure.

A revised Appendix D to 40 CFR Part 50 was proposed to include both the original ET-CL methodology as well as the new NO-CL methodology, such that use of either measurement technique would be acceptable for implementation in commercial FRM analyzers. Currently, two O_3 analyzer models (from the same manufacturer) employing the NO-CL methodology have been designated by the EPA as FEMs and would qualify for re-designation as FRMs under the revised O_3 FRM. The rationale for selecting the new NO-CL FRM methodology, including what other methodologies were also considered, and additional information to support its selection are discussed in the preamble to the proposal for this action (79 FR 75366 - 75368). No substantive change was proposed to the existing O_3 FRM calibration procedure, which would be applicable to both chemiluminescence FRM methodologies.

The proposed FRM in part 50, Appendix D also included numerous editorial changes to provide clarification of some provisions, some revised wording, additional details, and a more refined numbering system and format consistent with that of two other recently revised FRMs (for SO_2 and CO).

As noted in the proposal, there is substantial similarity between the new and previously existing FRM measurement techniques, and comparative field data show excellent agreement between ambient O_3 measurements made with the two techniques (U.S. EPA 2014f). Therefore, the EPA believes that there will be no significant impact on the comparability between existing ambient O_3 monitoring data based on the original ET-CL methodology and new monitoring data

that may be based on the NO-CL methodology.

The proposed FRM retains the original ET-CL methodology, so all existing FEMs, which were designated under part 53 based on demonstrated comparability to that ET-CL methodology, will retain their FEM designations. Thus, there will be no negative consequences or disruption to monitoring agencies, which will not be required to make any changes to their O_3 monitors due to the revised O_3 FRM. New FEMs would be designated under part 53, based on demonstrated acceptable comparability to either FRM methodology.

2. Comments on the FRM for O_3

Comments that were received from the public on the proposed new O_3 FRM technique are addressed in this section. Most commenters expressed general support for the proposed changes, although a few commenters expressed some concerns. The most significant issue discussed in comments was the relatively small but nevertheless potentially significant interference of water vapor observed in the ET-CL technique. As some comments pointed out, this interference is positive and could possibly affect NAAQS attainment decisions. The available NO-CL FEM analyzers include a sample dryer, which minimizes this interference. As noted previously, very few, if any, ET-CL FRM analyzers are still in operation. The ET-CL (with and without a sample dryer), the proposed NO-CL FRM, and all designated FEM analyzers have demonstrated compliance with the substantially reduced water vapor interference equivalent limit specified in 40 CFR part 53.

The proposed FRM mentioned the need for a sample air dryer for both ET-CL and NO-CL FRM analyzers. In response to these comments, the wording of the ET-CL FRM has been augmented to clarify the requirement for a dryer in all newly designated FRMs (the only change being made by the EPA to the existing ET-CL FRM as proposed). Also, the interference

equivalent limit for water vapor in part 53 was proposed to be substantially reduced from the current 0.02 ppm to 0.002 ppm. The interference equivalent test for water vapor applicable to the new NO-CL candidate FRM analyzers (specified in Table B-3 of part 53) was proposed to be more stringent than the corresponding existing test for ET-CL FRM analyzers by requiring that water vapor be mixed with O_3. This mixing requirement was not part of the existing test for ET-CL candidate analyzers (denoted by footnote 3 in Table B-3). However, in further response to these commenters' concerns, the EPA has modified Table B-3 to extend this water vapor mixing requirement to newly designated ET-CL analyzers, as well. These measures should insure that potential water vapor interference is minimized in all newly designated FRM analyzers.

Several comments indicated concern that currently-designated FEM analyzers retain their designation without retesting if the new FRM were promulgated. The current ET-CL FRM is being retained; therefore, it is not necessary to make these new requirements retroactive to existing designated FEM analyzers. The existing FEM analyzers will not be required to be retested, and their FEM designation will be retained so that there will be no disruption to current monitoring networks.

Although beyond the scope of this rulemaking, other comments concerned potential hazards of the NO compressed gas supply required for NO-CL analyzer operation, and the current non-availability of a photolytic converter to provide an alternative source of NO from a less hazardous nitrous oxide gas supply. With regard to the photolytic converter, the EPA would approve such a converter as a source of NO if requested by an FRM analyzer manufacturer, upon demonstration of adequate functionality.

A few commenters liked the "scrubberless UV absorption" (SL-UV) measurement technique. The EPA has identified the SL-UV method as a potentially advantageous candidate

for the O_3 FRM, but could not propose adopting it until additional test and performance information becomes available. A related comment requested clarification that promulgation of the proposed revised FRM would not preclude future consideration of other O_3 measurement techniques such as SL-UV. In response, the EPA can always consider new technologies for FRMs under 40 CFR 53.16 (Supersession of reference methods). However, a revised or amended FRM that included the SL-UV technique, as set forth in Appendix D of 40 CFR Part 50, would have to be promulgated as part of a future rulemaking, before a SL-UV analyzer could be approved as an FRM under 40 CFR Part 53.

One comment suggested that the value for the absorption cross section of O_3 at 254 nm used by the FRM's calibration procedure should be changed. The comment indicated that the nearly 2% difference effectively lowers the O_3 NAAQS by that amount. Using the corrected value would resolve much of the difference observed between O_3 measurements calibrated against the UV standard reference photometer versus those calibrated using NO gas phase titration and it would allow the EPA to adopt the less complex and more economical Gas Phase Titration (GPT) technique as the primary calibration standard for the FRM. The EPA will await the results of further studies determining the value of the O_3 cross section at 254 nm before making a change to the calibration procedures and will not finalize changes to the calibration procedures in this final rule.

E. Revisions to the Analyzer Performance Requirements

1. Proposed Changes to the Analyzer Performance Requirements

In close association with the proposed O_3 FRM, the EPA also proposed changes to the associated analyzer performance requirements for designation of FRMs and FEMs for O_3, as set forth in 40 CFR part 53. These changes were largely confined to Table B-1, which specifies

performance requirements for FRM and FEM analyzers for SO_2, CO, O_3, and NO_2, and to Table B-3, which specifies test concentrations for the various interfering agent (interferent) tests. Minor changes were also proposed for Figure B-5 and the general provisions in subpart A of part 53. All of these proposed changes are described and discussed more fully in the preamble to the proposal for this action (79 FR 75368 - 75369).

Modest changes proposed for Table B-3 would add new interferent test concentrations specifically for NO-CL O_3 analyzers, which include a test for NO_2 interference.

Several changes to Table B-1 were proposed. Updated performance requirements for "standard range" analyzers were proposed to be more consistent with current O_3 analyzer performance capabilities, including reduced limits for noise allowance, lower detectable limit (LDL), interference equivalent, zero drift, span drift, and lag, rise, and fall times. The previous limit on the total of all interferents was proposed to be withdrawn as unnecessary and to be consistent with that same change made previously for SO_2 and CO analyzers. Also, the span drift limit at 20% of the upper range limit (URL) was proposed to be withdrawn because it has similarly been shown to be unnecessary and to maintain consistency with that same change made previously for SO_2 and CO analyzers.

The form of the precision limits at both 20% and 80% of the URL was proposed to be changed from ppm to percent. The proposed new limits (in percent) were set to be equivalent to the previously existing limits (in ppm) and thus remain effectively unchanged. This change in form of the precision limits in Table B-1 has been previously made for SO_2 and CO analyzers, and was proposed to extend also to analyzers for NO_2, (again with equivalent limits) for consistency and to simplify Table B-1 across all types of analyzers to which the table applies. A new footnote proposed for Table B-1 clarifies the new form for precision limits as "standard

deviation expressed as percent of the URL." Also proposed was a revision to Figure B-5 (Calculation of Zero Drift, Span Drift, and Precision) to reflect the changes proposed in the form of the precision limits and the withdrawal of the limits for total interference equivalent.

Concurrent with the proposed changes to the performance requirements for candidate O_3 analyzers, the EPA conducted a review of all designated FRM and FEM O_3 analyzers currently in production or being used, and verified that all meet the proposed new performance requirements. Therefore, none would require withdrawal or cancellation of their current FRM or FEM respective designations.

Finally, the EPA proposed new, optional, "lower range" performance limits for O_3 analyzers operating on measurement ranges lower (i.e., more sensitive) than the standard range specified in Table B-1. The new performance requirements are listed in a new "lower range" column in Table B-1 and will provide for more stringent performance in applications where more sensitive O_3 measurements are needed.

Two minor changes were proposed to the general, administrative provisions in Subpart A of part 53. These include an increase in the time allowed for the EPA to process requests for approval of modifications to previously designated FRMs and FEMs in 53.14 and the withdrawal of a requirement for annual submission of Product Manufacturing Checklists associated with FRMs and FEMs for $PM_{2.5}$ and $PM_{10-2.5}$ in 53.9. No comments were received on these proposed changes and the EPA will be finalizing these revisions in this rulemaking.

2. Comments on the Analyzer Performance Requirements

Several comments were received related to the proposed changes to the analyzer performance requirements of part 53, and most were supportive. Comments from a few monitoring agencies suggested that the more stringent performance requirements proposed might

be difficult to achieve or would increase monitor maintenance and cost. The EPA is also clarifying that these requirements apply only to the performance qualification requirements for designations of new FRM and FEM analyzers and will have no impact on a monitoring agency's operation of existing O_3 analyzers.

More specific comments from an analyzer manufacturer pointed out that the proposed lower limits for noise and LDL may be too stringent, the former because low-cost portable analyzers may have shorter absorption cells, and the latter because of limitations of current calibration technology. After further consideration of available analyzer performance data in light of these comments, the EPA agrees and is changing the noise limits from the proposed values of 1 ppb and 0.5 ppb (for the standard and lower ranges, respectively) to 2.5 ppb and 1 ppb (respectively). The EPA is also changing the LDL limit from the proposed values of 3 ppb and 1 ppb (respectively) to 5 ppb and 2 ppb (respectively). These new limits are still considerably more stringent than the previous limits (for the standard range) and are also consistent with those recommended by the commenter and the current performance capabilities of existing analyzer/calibration technology.

This commenter also pointed out that the proposed lower limit for 12-hour zero drift, together with the way the prescribed test is carried out, resulted in the test being dominated by analyzer noise rather than drift. The EPA agrees with this comment in general but believes that further study is needed before any specific changes can be proposed for the 12-hour zero drift test, particularly since any such changes would affect analyzers for other gaseous pollutants, as well.

Other comments suggested that there was no need for the proposed new, low-range performance requirements, because of cost and that available calibrators would be inadequate for

calibration of such low ranges. The EPA disagrees with these comments and believes, as noted in the proposal preamble, that there is a definite need for low-level O_3 measurements in some applications and that suitable calibration for such low-level measurement ranges can be adequately carried out. As stated previously, the new "low range" specifications for O_3 analyzers are optional.

Several comments pointed out some typographical errors related to footnotes in Table B-3, as proposed; these errors have been corrected in the version of Table B-3 being finalized today.

EPA is finalizing the proposed amendments to both the O_3 FRM in Appendix D of part 50 and provisions in part 53, modified as described above, in response to the comments received.

VII. Grandfathering Provision for Certain PSD Permits

This section addresses the grandfathering provision for certain Prevention of Significant Deterioration (PSD) permit applications that is being finalized in this rule. Section VIII.C of this preamble contains a description of the PSD and Nonattainment New Source Review (NNSR) permitting programs and additional discussion of the implementation of those programs for the O_3 NAAQS.

A. Summary of the Proposed Grandfathering Provision

The EPA proposed to amend the PSD regulations to add a transition plan that would address the extent to which the revised O_3 NAAQS will apply to pending PSD permit applications. This transition plan is reflected in a grandfathering provision that applies to permit applications that meet certain milestones in the review process prior to either the signature date or effective date of the revised O_3 NAAQS. Absent such a grandfathering provision in the EPA's regulations, the EPA interprets section 165(a)(3)(B) of the CAA and the implementing PSD

regulations at 40 CFR 52.21(k)(1) and 51.166(k)(1) to require that PSD permit applications include a demonstration that emissions from the proposed facility will not cause or contribute to a violation of any NAAQS that is in effect as of the date the PSD permit is issued. The proposal included a grandfathering provision that would enable eligible PSD applications to make the demonstration that the proposed project would not cause or contribute to a violation of any NAAQS with respect to the O_3 NAAQS in effect at the time the relevant permitting benchmark for grandfathering was reached, rather than the revised O_3 NAAQS. We proposed that the grandfathering provision would apply specifically to either of two categories of pending PSD permit applications: (1) applications for which the reviewing authority has formally determined that the application is complete on or before the signature date of the final rule revising the O_3 NAAQS; and (2) applications for which the reviewing authority has first published a public notice of the draft permit or preliminary determination before the effective date of the revised NAAQS.

In the proposal, we also noted that for sources subject to the federal PSD program under 40 CFR 52.21, the EPA and air agencies that have been delegated authority to implement the federal PSD program for the EPA would apply the grandfathering provision to any PSD application that satisfies either of the two criteria that make an application eligible for grandfathering. Accordingly, if a particular application does not qualify under the first criterion based on a complete application determination, it may qualify under the second criterion based on a public notice announcing the draft permit or preliminary determination. Conversely, a source may qualify for grandfathering under the first criterion, even if it does not satisfy the second.

The EPA also proposed revisions to the PSD regulations at 40 CFR 51.166 that would

afford air agencies that issue PSD permits under a SIP-approved PSD permit program the discretion to adopt provisions into the SIP that allow for grandfathering of pending PSD permits under the same circumstances as set forth in the federal PSD regulations. With regard to implementing the grandfathering provision, we also explained that air agencies with EPA-approved PSD programs in their SIPs would have additional flexibility for implementing the proposed grandfathering provision to the extent that any alternative approach is at least as stringent as the federal provision. In addition, the proposal recognized that some air agencies do not make formal completeness determinations; thus, only the latter criterion based on the issuance of a public notice would be relevant in such cases and the state could elect to adopt only that criterion into its SIP. Accordingly, the EPA proposed to add a grandfathering provision to 40 CFR 51.166 containing the same two criteria as proposed for 40 CFR 52.21.

B. Comments and Responses

Many of the comments supported the concept of grandfathering. Some of these comments, mostly by state and local air agencies, supported the grandfathering provision as proposed. Many others recommended alternative approaches to grandfathering based on several different dates. Several comments recommended that air agencies be allowed to grandfather certain PSD permit applications and issue a PSD permit based on the 2008 O_3 NAAQS after the area is designated nonattainment for the revised O_3 NAAQS. An opposing set of comments, representing a coalition of eight environmental groups and one health advocacy group, strongly objected to the proposal for grandfathering, claiming that the EPA did not have any authority under the CAA to exempt or grandfather permit applicants from the statutory PSD permitting requirements. We are addressing some of these comments below and others in the Response to Comment Document that is included in the docket for this rule.

Comments that recommended broadening the scope of the proposed grandfathering provision suggested a variety of approaches. Some air agency and industry comments recommended that the EPA adopt a grandfathering provision applicable only to those PSD applications for which the reviewing authority has determined the application to be complete on or before the signature date of the revised NAAQS. Other air agency and industry comments recommended that grandfathered status be determined only on the basis of whether the relevant permitting milestone has been achieved by the effective date of the revised NAAQS.

The EPA disagrees with these comments; the final rule uses separate dates for the two grandfathering milestones, as proposed. If the effective date of the revised NAAQS were used as the date for the complete application milestone, this could lead to pressure on state permitting authorities to prematurely issue completeness determinations in order to qualify for the grandfathering provision in the time period between signature of this final rule and the effective date. Using the signature date of the revised O_3 NAAQS as the date for the grandfathering milestone based on the completeness determination is thus intended to help preserve the integrity of the completeness determination process. Permit applications that have not yet been determined complete can be supplemented or revised to address the revised O_3 standards before the completeness determination is issued. Conversely, the amount and type of work required for a preliminary determination or a draft permit reduces the risk that such a document would be released prematurely merely to qualify for grandfathering. Similarly, because these documents are released for the purpose of providing an adequate opportunity for public participation in the permitting process, it would not behoove a reviewing authority to precipitately release such documents merely to satisfy the grandfathering milestone. Accordingly, the EPA does not have the same concerns about using the effective date of this final rule for the preliminary

determination or draft permit milestone and further finds it reasonable to provide additional time for satisfying this milestone. Moreover, using the proposed milestones and corresponding dates is consistent with the milestones and corresponding dates that were used in the grandfathering provisions for the 2012 $PM_{2.5}$ NAAQS.

Several other comments recommended that the grandfathering provision apply to all PSD applications for which a final PSD permit will be issued prior to the effective date of the area designations for the revised NAAQS. Some of these comments explained that without some transition provisions in the final rule, it may be impossible for a source to demonstrate attainment if the current ambient air monitoring data indicates a revised, lowered standard is not being met. The comments also suggested that the extended period for grandfathering a source from the revised NAAQS would provide states with additional time to establish offset banks or similar systems for new nonattainment areas.

Other comments recommended that air agencies be allowed to grandfather either all or certain PSD permit applications received before the effective date of the final nonattainment designations for the revised O_3 NAAQS. These comments supported allowing air agencies to issue PSD permits to grandfathered sources even after the area in which the source proposes to locate is designated nonattainment for the revised O_3 NAAQS. One comment saw this as being necessary because the development of the regulatory framework that will support the revised NAAQS, such as development of a credit market or even a transition into NNSR permitting, does not instantaneously accompany the revised standard. Hence, the comment added that "[d]uring the Interim Period (the time between the revision of the NAAQS rule and development of the regulatory framework) the project may be unable to secure offsets and no offsets would be available for purchase." Another comment explained that the extended period for grandfathering

sources from the revised O_3 NAAQS was needed to "minimize disruption to complex projects that may have been under development since before the EPA published the proposed NAAQS revision." This comment noted the "PSD projects commonly undergo years of engineering and other development resources before an air permit application can be prepared."

The EPA does not agree with the comments recommending that the EPA use a date after the effective date of the revised O_3 NAAQS as the date by which the permit application must reach the relevant milestone to qualify for grandfathering. The EPA does not believe it is appropriate to unreasonably or unnecessarily delay implementation of these revised standards under the PSD program. As explained in more detail below, the purpose of the grandfathering provision is to provide a reasonable transition mechanism for certain PSD applications and the EPA believes that the milestones proposed and finalized here strike the appropriate balance in providing for such a reasonable transition. Moreover, in some cases, some of these recommended approaches could enable a situation where a PSD permit would be issued to a source during a future period when the area is designated nonattainment for the revised O_3 NAAQS. As explained below, the EPA does not believe that this specific outcome is permissible under the CAA.

The EPA does not agree with the comments suggesting that the grandfathering provision should be expanded to apply to any PSD application received before the effective date of the final nonattainment designations for the revised O_3 NAAQS. Because the process for reviewing PSD permit applications and issuing a final PSD permit is time consuming, such an approach could allow issuance of PSD permits to grandfathered sources even after the area in which the source proposes to locate is designated nonattainment for the revised O_3 NAAQS. The EPA does not agree that grandfathering should be extended in a way that would allow a source located in

an area designated as nonattainment for a pollutant at the time of permit issuance to obtain a PSD permit for that pollutant rather than a NNSR permit. The EPA does not interpret the CAA or its implementing regulations to allow such an outcome. The PSD requirements under CAA section 165 only apply in areas designated attainment or unclassifiable for the pollutant. *Alabama Power v. Costle*, 636 F.2d 323, 365-66, 368 (D.C. Cir. 1980). Accordingly, the PSD implementing regulations at 40 CFR 52.21(i)(2) contain an exemption that provides that the substantive PSD requirements shall not apply to a pollutant if the owner or operator demonstrates that the facility is located in an area designated nonattainment for that pollutant under CAA section 107 of the Act. *See also* 40 CFR 51.166(i)(2) (allowing for the same exemption in SIP-approved PSD permitting programs). In addition, under CAA section 172(c)(5) implementation plans must require that permits issued to new or modified stationary sources "anywhere in the nonattainment area" meet the requirements of CAA section 173, which contains the NNSR permit requirements. *See* 40 CFR Part 51, Appendix S, IV.A (providing that, if a major new source or major modification that would locate in an area designated as nonattainment for a pollutant for which the source or modification would be major, approval to construct may be granted only if the specific conditions for NNSR are met, including obtaining emission offsets and an emission limitation that specifies the lowest achievable emissions rate). Moreover, given the adverse air quality conditions that already exist in a nonattainment area and the congressional directive to reach attainment as expeditiously as practicable, construction of a major stationary source that significantly increases emissions in such an area should be expected to address all of the NNSR requirements, which are designed to ensure that a new or modified major stationary source will not interfere with reasonable progress toward attainment, even if this could cause delay to the permit applicant.

With respect to the comments that suggested the effective date of the NAAQS should be used as the date for both milestones, the EPA does not agree that such a change is necessary. The purpose of the grandfathering provision is to provide a reasonable transition mechanism in the following circumstances: first, the PSD application is one for which both the applicant and the reviewing authority have committed substantial resources; and, second, this situation is one where the need to satisfy the demonstration requirement under CAA section 165(a)(3) could impact the reviewing authority's ability to meet the statutory deadline for issuing a permit within one year of the completeness determination. In situations where the reviewing authority has not yet issued a completeness determination as of the signature date of the revised O_3 NAAQS, both the permit applicant and the reviewing authority have sufficient notice of the revised standard so that it can be addressed before the completeness determination is issued and the one-year clock begins to run. The grandfathering provision issued in this rulemaking is crafted to draw a reasonable balance that accommodates the requirements under both CAA sections 165(a)(3) and 165(c). Any modification of the dates further than is necessary to accommodate these concerns could upset this balance.

With respect to the comments that suggested adopting a grandfathering provision applicable only to those PSD applications for which the reviewing authority has determined the application to be complete on or before the signature date of the revised NAAQS, the EPA is not making this change because we understand that not all reviewing authorities issue formal completeness determinations. Including a grandfathering provision based on the publication of a public notice of the draft permit or preliminary determination provides a reasonable transition mechanism for PSD applications in situations where the reviewing authority does not issue formal completeness determinations, but the applicant and the reviewing authority have both

committed substantial resources to the pending permit application at the time the revisions to the O_3 NAAQS are finalized.

An opposing set of comments—submitted by a consortium of eight environmental groups and one health advocacy group—challenged the proposed grandfathering provision on the basis that the EPA did not have the legal authority to grandfather sources from PSD requirements. These commenters argued that the plain language of CAA section 165 forecloses the EPA's proposed approach and raised several other legal considerations. The EPA disagrees with these comments, including the interpretations of the CAA that they offer. As summarized in the rationale for the final action below in section VII.C of this preamble, the EPA believes that the CAA provides it authority and discretion to establish a PSD grandfathering provision such as the one being adopted today through a rulemaking process. The EPA is providing a further, detailed analysis fully responding to this set of comments, as well as other comments related to the grandfathering provision, in the Response to Comment Document in the docket for this rule.

C. Final Action and Rationale

After consideration and evaluation of all the public comments received on the grandfathering provision, the EPA is finalizing this provision as proposed, with minor revisions that enhance the clarity of the grandfathering provision, without changing its substantive effect. While these revisions lead to slight differences in wording for the grandfathering provision for the 2012 $PM_{2.5}$ NAAQS and the grandfathering provision finalized in this rulemaking, those differences are not intended to create a different meaning; rather, the grandfathering provision finalized in this rulemaking is intended to have the same substantive effect and meaning for the revised O_3 standards as the grandfathering provision for the 2012 $PM_{2.5}$ NAAQS had for the revised PM standards. Other than those clarifying revisions, this final

rule includes the same rule language for the grandfathering provision as previously proposed for the PSD regulations at 40 CFR 52.21(i)(12) and 51.166(i)(11), respectively. The provision in the final rule reflects the same two milestones and corresponding dates as the proposed grandfathering provision. Thus, under the grandfathering provision as finalized, either of the following two categories of pending PSD permit applications would be eligible for grandfathering: (1) applications for which the reviewing authority has formally determined that the application is complete on or before the signature date of the revised O_3 NAAQS, or (2) applications for which the reviewing authority has first published a notice of a draft permit or preliminary determination before the effective date of the revised O_3 NAAQS. The EPA believes that it continues to be appropriate to include the two proposed milestones for pending permit applications to be eligible for grandfathering. While a completeness determination is often the first event, some air agencies do not determine applications complete as part of their permit process.

Under 40 CFR 52.21, a permit application may qualify for grandfathering under either of the two sets of milestones and dates contained in the provision. Where the EPA is the reviewing authority, the EPA intends to apply the grandfathering provision to PSD applicants pursuant to PSD regulations at 40 CFR 52.21 primarily through the use of the completeness determination milestone because the EPA Regional Offices make a formal completeness determination for any PSD application that they receive and review. The EPA is including the second criterion in 40 CFR 52.21 so that pending applications can still qualify for grandfathering under the second criterion if any air agency that incorporates 40 CFR 52.21 into a SIP-approved program does not make formal completeness determinations as part of its permit review process.

The EPA is also amending the PSD regulations at 40 CFR 51.166 to enable states and

other air agencies that issue PSD permits under SIP-approved PSD programs to adopt a comparable grandfathering provision. Nevertheless, such air agencies have discretion to not grandfather PSD applications or to apply grandfathering under their approved PSD programs in another manner as long as that program is at least as stringent as the provision being added to 40 CFR 51.166. Accordingly, an air agency may elect to rely on both sets of milestones and dates or it may grandfather on the sole basis of only one set. However, the EPA anticipates that once a decision is made concerning the use of either set of milestones and dates, the air agency will apply grandfathering consistently to all pending PSD permit applications.

As explained in more detail in the proposal, absent a regulatory grandfathering provision, the EPA interprets section 165(a)(3)(B) of the CAA and the implementing PSD regulations at 40 CFR 52.21(k)(1) and 51.166(k)(1) to require that PSD permit applications include a demonstration that emissions from the proposed facility will not cause or contribute to a violation of any NAAQS that is in effect as of the date the PSD permit is issued. However, reading CAA section 165(a)(3)(B) in context with other provisions of the Act and the legislative history, the EPA interprets the Act to provide the EPA with authority to establish grandfathering provisions through regulation. The EPA has explained its interpretation of its authority to promulgate grandfathering provisions in previous rulemaking actions, most recently in the rule establishing the grandfathering provision for the 2012 $PM_{2.5}$ NAAQS (78 FR 3086, 3254-56, January 15, 2013), as well as in the proposal for this final action. The EPA is providing additional discussion of this authority in the Response to Comment Document contained in the docket for this final action.

To summarize briefly, the addition of this grandfathering provision is permissible under the discretion provided by the CAA for the EPA to craft a reasonable implementation regulation

that balances competing objectives of the statutory PSD program found in CAA section 165. Specifically, section 165(a)(3) requires a permit applicant to demonstrate that its proposed project will not cause or contribute to a violation of any NAAQS, while section 165(c) requires that a PSD permit be granted or denied within one year after the permitting authority determines the application for such permit to be complete. Section 109(d)(1) of the CAA requires the EPA to review existing NAAQS and make appropriate revisions every five years. When these provisions are considered together, a statutory ambiguity arises concerning how the requirements under CAA section 165(a)(3)(B) should be applied to a limited set of pending PSD permit applications when the O_3 NAAQS is revised. The Act does not clearly address how the requirements of CAA section 165(a)(3)(B) should be met for PSD permit applications that are pending when the NAAQS are revised, particularly when the EPA also determines that complying with the demonstration requirement for the revised NAAQS could hinder compliance with the requirement under section 165(c) to issue a permit within one year of the completeness determination for a certain subset of pending permits. The CAA also does not address how the requirements of CAA sections 165(a)(3) and 165(c) should be balanced in light of the statutory requirement to review the NAAQS every five years. As Congress has not spoken precisely to this issue, the EPA has the discretion to apply a permissible interpretation of the Act that balances the statutory requirements to make a decision on a permit application within one year and to ensure the new and modified sources will only be authorized to construct after showing they can meet the substantive permitting criteria. *See Chevron, U.S.A., Inc. v. Natural Res. Def. Council, Inc.*, 467 U.S. 837, 843-44 (1984).

In addressing these gaps in the CAA and the tension that may arise in section 165 in these circumstances, the EPA also applies CAA section 301, where the Administrator is authorized "to

prescribe such regulations as are necessary to carry out his functions under this chapter." Sections 165(a)(3) and 165(c) of the CAA make clear that the interests behind CAA section 165 include both protection of air quality and timely decision-making on pending permit applications. The legislative history illustrates congressional intent to avoid delays in permit processing. S. Rep. No. 94–717, at 26 (1976) ("nothing could be more detrimental to the intent of this section and the integrity of this Act than to have the process encumbered by bureaucratic delay"). Thus, when read in combination, these provisions of the CAA provide the EPA with the discretion to issue regulations to grandfather pending permit applications from having to address a revised NAAQS where necessary to achieve both CAA objectives – to protect the NAAQS and to avoid delays in processing PSD permit applications. Accordingly, the EPA is seeking in this action to balance the requirements in the CAA to make a decision on a permit application within one year and to ensure that new and modified sources will only be authorized to construct after showing they can meet the substantive permitting criteria that apply to them. The EPA is achieving this balance by determining through rulemaking which O_3 NAAQS apply to certain permit applications that are pending when the EPA finalizes the revisions to the O_3 NAAQS in this final rule. We are clarifying, for the limited purpose of satisfying the requirements under section 165(a)(3)(B) for those permits, which O_3 NAAQS are applicable to those permit applications and must be addressed in the source's demonstration that its emissions do not cause or contribute to a violation of the NAAQS.

This approach is consistent with a recent opinion the U.S. Court of Appeals for the Ninth Circuit, which recognized the EPA's traditional exercise of grandfathering authority through rulemaking. The court observed that this approach was consistent with the statutory requirement to "enforce whatever regulations are in effect at the time the agency makes a final decision"

because it involved identifying "an operative date, incident to setting the new substantive standard, and the grandfathering of pending permit applications was explicitly built into the new regulations." *Sierra Club v. EPA*, 762 F.3d 971, 983 (9th Cir. 2014). As discussed in more detail in the EPA's Response to Comment Document contained in the docket for this rule, this case supports the EPA's action in this rulemaking. The court favorably discussed prior adoption of regulatory grandfathering provisions that are similar to the action in this rulemaking, such as the grandfathering provision that the EPA promulgated when revising the $PM_{2.5}$ NAAQS that became effective in 2013. *See id.* at 982-83.[227]

This adoption of a grandfathering provision in this action is also consistent with previous actions in which the EPA has recognized that the CAA provides discretion for the EPA to establish grandfathering provisions for PSD permit applications through regulations. Some examples of previous references to the EPA's authority to grandfather certain applications through rulemaking include 45 FR 52683, August 7, 1980; 52 FR 24672, July 1, 1987; and most recently 78 FR 3086, January 15, 2013.

This grandfathering provision does not apply to any applicable PSD requirements related to O_3

[227] This case specifically involved an action by the EPA to issue an individual PSD permit, which grandfathered a specific permit applicant from certain requirements without any revision to the regulations that were in effect. The court's reasoning in this case distinguishes that type of permit-specific grandfathering from establishing grandfathering provisions through a rulemaking process. While the court was not persuaded that there was a conflict between the requirements of sections 165(a)(3) and 165(c) of the CAA that supported the permit-specific grandfathering at issue in that case, it did not extend that uncertainty to its discussion of the EPA's rulemaking authority. In fact, in its favorable discussion of the EPA's authority to grandfather pending permit applications through regulation, the court noted that the power of an administrative agency "to administer a congressionally created and funded program necessarily requires the formulation of policy and the making of rules to fill any gap left, implicitly or explicitly, by Congress" though "such decision cannot be made on an ad hoc basis." *Sierra Club v. EPA*, 762 F.3d 971, 983 (9th Cir. 2014) (internal quotations and marks omitted). This indicates that the court believed there is a gap in the CAA that supports including grandfathering provisions in regulations.

other than the requirement to demonstrate that the proposed source does not cause or contribute to a violation of the revised O_3 NAAQS. Sources with projects qualifying under the grandfathering provision will be required to meet all the other applicable PSD requirements, including applying BACT to all applicable pollutants, demonstrating that emissions from the proposed facility will not cause or contribute to a violation of the O_3 NAAQS in effect at the time of the relevant grandfathering milestone, and addressing any Class I area and additional O_3-related impacts in accordance with the applicable PSD requirements. In addition, this grandfathering provision would not apply to any permit application for a new or modified major stationary source of O_3 located in an area designated nonattainment for O_3 on the date the permit is issued.

VIII. Implementation of the Revised O_3 Standards

This section provides background information for understanding the implications of the revised O_3 NAAQS and describes the EPA's plans for providing revised rules or additional guidance on some subjects in a timely manner to assist states with their implementation efforts under the requirements of the CAA. This section also describes existing EPA rules, interpretations of CAA requirements, and other EPA guidance relevant to implementation of revised O_3 NAAQS. Relevant CAA provisions that provide potential flexibility with regard to meeting implementation timelines are highlighted and discussed. This section also contains a discussion of how existing requirements to reduce the impact on O_3 concentrations from the stationary source construction in permit programs under the CAA are affected by the revisions to the O_3 NAAQS. These are the PSD and Nonattainment New Source Review (NNSR) programs. As discussed in section VII of this preamble, to facilitate a smooth transition to the PSD requirements for the revised O_3 NAAQS, the EPA is finalizing as part of this rulemaking a

grandfathering provision that applies to certain PSD permit applications that are pending and have met certain milestones in the permitting process when the revised O_3 NAAQS is signed or before the effective date of the revised O_3 NAAQS, depending on the milestone.

In the preamble for the O_3 NAAQS proposal, the EPA solicited comments on several issues related to implementing the revised O_3 NAAQS that the agency anticipated addressing in future guidance or regulatory actions, but for which the EPA was not at that time proposing any action. The EPA received numerous comments on those and other implementation issues. Consistent with what the EPA indicated in the O_3 NAAQS proposal (79 FR 75370), the agency is not responding to the implementation comments that are not related to a specific proposal. However, the EPA intends to take these comments under advisement as the agency develops rules and guidance to assist with implementation of the revised NAAQS. Because the EPA did specifically propose and is finalizing provisions in the regulations addressing grandfathering for certain PSD permit applications and requirements, as discussed in section VII of this preamble, the EPA is responding to comments on the proposed PSD grandfathering provisions.

A. NAAQS Implementation Plans

1. Cooperative Federalism

As directed by the CAA, reducing pollution to meet national air quality standards always has been a shared task, one involving the federal government, states, tribes and local air quality management agencies. The EPA develops regulations and strategies to reduce pollution on a broad scale, while states and tribes are responsible for implementation planning and any additional emission reduction measures necessary to bring specific areas into attainment. The agency supports implementation planning with technical resources, guidance, and program rules where necessary, while air quality management agencies use their knowledge of local needs and

opportunities in designing emission reduction strategies that will work best for their industries and communities.

This partnership has proved effective since the EPA first issued O_3 standards more than three decades ago. For example, 101 areas were designated as nonattainment for the 1-hour O_3 standards issued in 1979. As of the end of 2014, air quality in all but one of those areas meets the 1-hour standards. The EPA strengthened the O_3 standards in 1997, shifting to an 8-hour standard to improve public health protection, particularly for children, the elderly, and other sensitive individuals. The 1997 standards drew significant public attention when they were proposed, with numerous parties voicing concerns about states' ability to comply. However, after close collaboration between the EPA, states, tribes and local governments to reduce O_3-forming pollutants, significant progress has been made. Air quality in 108 of the original 115 areas designated as nonattainment for the 1997 O_3 NAAQS now meets those standards. Air quality in 18 of the original 46 areas designated as nonattainment for the 2008 O_3 NAAQS now meets those standards.

The revisions to the primary and secondary O_3 NAAQS discussed in sections II.E and IV.G of this preamble trigger a process under which states[228] make recommendations to the Administrator regarding area designations. Then, the EPA promulgates the final area designations. States also are required to review capacity and authorities in their existing SIPs to ensure the CAA requirements associated with the new standards can be carried out, and modify or supplement their existing SIPs as needed. The O_3 NAAQS revisions also apply to the transportation conformity and general conformity determinations, and affect which

[228] This and all subsequent references to "state" are meant to include state, local, and tribal agencies responsible for the implementation of an O_3 control program.

preconstruction permitting requirements apply to sources of O_3 precursor emissions, and the nature of those requirements.

The EPA has regulations in place addressing the general requirements for SIPs, and there are also provisions in these existing rules that cover O_3 SIPs (40 CFR part 51). States likewise have provisions in their existing SIPs to address air quality for O_3 and to implement the existing O_3 NAAQS. In the course of the past 45 years of regulating criteria pollutants, including O_3, the EPA has also provided general guidance on the development of SIPs and administration of construction permitting programs, as well as specific guidance on implementing the O_3 NAAQS in some contexts under the CAA and the EPA regulations.

The EPA has considered the extent to which existing EPA regulations and guidance are sufficient to implement the revised standards. The CAA does not require that the EPA promulgate new implementing regulations or issue new guidance for states every time that a NAAQS is revised. Likewise, the CAA does not require the issuance of additional implementing regulations or guidance by the EPA before a revised NAAQS becomes effective. It is important to note that the existing EPA regulations in 40 CFR part 51 applicable to SIPs generally and to particular pollutants, including O_3 and O_3 precursors, continue to apply unless and until they are updated. Accordingly, the discussion below provides the EPA's current thoughts about the extent to which revisions to existing regulations and additional guidance are appropriate to aid in the implementation of the revised O_3 NAAQS.

2. Additional New Rules and Guidance

The EPA has received comments from a variety of states and organizations asking for rules and guidance associated with a revised NAAQS to be issued in a timely manner. As explained above, and consistent with the proposal, the EPA is not responding to these comments

at this time because they are not related to any changes to existing regulations that EPA proposed in this rule. Moreover, although issuance of such rules and guidance is not a part of the NAAQS review process, *National Ass'n of Manufacturers v. EPA*, 750 F. 3d 921, 926-27 (D.C. Cir. 2014), toward that end, the EPA intends to develop appropriate revisions to necessary implementation rules and provide additional guidance in time frames that are useful to states when developing implementation plans that meet CAA requirements.

Certain requirements under the PSD preconstruction permit review program apply immediately to a revised NAAQS upon the effective date of that NAAQS, unless the EPA has established a grandfathering provision through rulemaking. To ensure a smooth transition to a revised O_3 NAAQS, the EPA is finalizing a grandfathering provision similar to the provision finalized in the 2012 $PM_{2.5}$ NAAQS Rule. *See* section VII.C of this preamble for more details on the PSD program and the final grandfathering provision.

Promulgation or revision of the NAAQS starts a clock for the EPA to designate areas as either attainment or nonattainment. State recommendations for area designations are due to the EPA within 12 months of promulgating or revising the NAAQS. In an effort to allow states to make more informed recommendations for these particular standards, the EPA intends to issue additional guidance concerning the designations process for these standards within four months of promulgation of the NAAQS, or approximately eight months before state recommendations are due. The EPA generally completes area designations two years after promulgation of a NAAQS. *See* section VIII.B of this preamble for additional information on the initial area designation process.

Under CAA section 110, a NAAQS revision triggers the review and, as necessary, revision of SIPs to be submitted within three years of promulgation of a revised NAAQS. These

SIPs are referred to as "infrastructure SIPs." The EPA issued general guidance on submitting infrastructure SIPs on September 13, 2013.[229] It should be noted that this guidance did not address certain state planning and emissions control requirements related to interstate pollution transport. This guidance remains relevant for the revised O_3 NAAQS. *See* section VIII.A.4 of this preamble for additional information on infrastructure SIPs.

While much of the existing rules and guidance for prior ozone standards remains applicable to the new standards, the EPA intends to propose to adopt revised rules on some subjects to facilitate air agencies' efforts to implement the revised O_3 NAAQS within one year after the revised NAAQS is established. The rules would address nonattainment area classification methodologies and attainment dates, attainment plan and NNSR SIP submission due dates, and any other necessary revisions to existing regulations for other required implementation programs. The EPA anticipates finalizing these rules by the time areas are designated nonattainment. Finalizing rules and guidance on these subjects by this time would assist air quality management agencies with development of any CAA-required SIPs associated with nonattainment areas. *See* section VIII.A.5 of this preamble for additional information on nonattainment SIPs and section VIII.C.3 for additional information on nonattainment New Source Review requirements applicable to new major sources and major modifications of existing sources.

3. Background O_3

The EPA and state, local and tribal air agencies, strive to determine how to most

[229] *See* memorandum from Stephen D. Page to Regional Air Directors, "Guidance on Infrastructure State Implementation Plan (SIP) Elements under Clean Air Act Sections 110(a)(1) and 110(a)(2)" September 13, 2013, which is available at http://www3.epa.gov/airquality/urbanair/sipstatus/docs/Guidance_on_Infrastructure_SIP_Elements_Multipollutant_FINAL_Sept_2013.pdf.

effectively and efficiently use the CAA's various provisions to provide required public health and welfare protection from the harmful effects of O_3. In most cases, reducing man-made emissions of NO_X and VOCs within the U.S. will reduce O_3 formation and provide additional health and welfare protection. The EPA recognizes, however, that there can be infrequent events where daily maximum 8-hour O_3 concentrations approach or exceed 70 ppb largely due to the influence of wildfires or stratospheric intrusions, which contribute to U.S. background (USB) levels but may also qualify for consideration under the Exceptional Events Rule. See section I.D; but see section II.A.2.a above (percentage of anthropogenic O_3 tends to increase on high O_3 days relative to percentage of background, including in intermountain west).

The term "background" O_3 is often used to refer to O_3 that originates from natural sources of O_3 (e.g., wildfires and stratospheric O_3 intrusions) and O_3 precursors, as well as from man-made international emissions of O_3 precursors. Using the term generically, however, can lead to confusion as to what sources of O_3 are being considered. Relevant to the O_3 implementation provisions of the CAA, we define background O_3 the same way the EPA defines USB: O_3 that would exist in the absence of any man-made emissions inside the U.S.

While the great majority of modeled O_3 exceedances have local and regional emissions as their primary cause, there can be events where O_3 levels approach or exceed the concentration level of the revised O_3 standards in large part due to background sources. These cases of high USB levels on high O_3 days typically result from stratospheric intrusions of O_3 or wildfire O_3 plumes. These events are infrequent and the CAA contains provisions that can be used to help deal, in particular, with stratospheric intrusion and wildfire events with O_3 contributions of this magnitude, including providing varying degrees of regulatory relief for air agencies and potential regulated entities. The EPA intends to work closely with states to identify affected locations and

ensure that the appropriate regulatory mechanisms are employed.

Statutory and regulatory relief associated with U.S. background O_3 may include: [230]

- Relief from designation as a nonattainment area through exclusion of data affected by exceptional events;
- Relief from the more stringent requirements of higher nonattainment area classifications through treatment as a rural transport area, through exclusion of data affected by exceptional events, or through international transport provisions;
- Relief from having to demonstrate attainment and having to adopt more than reasonable controls on local sources through international transport provisions.

Further discussion of these mechanisms is provided in sections VIII.B.2 (exceptional events), VIII.B.1 (rural transport areas), and VIII.E.2 (international transport).

Although these relief mechanisms require some level of assessment or demonstration by a state and/or the EPA to invoke, they have been used successfully in the past under appropriate circumstances. For example, the EPA has historically acted on every exceptional events demonstration that has affected a regulatory decision regarding initial area designations. *See e.g.*, *Idaho: West Silver Valley Nonattainment Area – Area Designations for the 2012 primary annual $PM_{2.5}$ NAAQS Technical Support Document*, pp. 10-14, December 2014. For the revised O_3 standards, the areas that would most likely need to use the mechanisms discussed in this section

[230] Note that the relief mechanisms discussed here do not include the CAA's interstate transport provisions found in sections 110(a)(2)(D) and 126. The interstate transport provisions are intended to address the cross-state transport of O_3 and O_3 precursor emissions from man-made sources within the continental U.S. rather than background O_3 as it is defined in this section. As noted in section II.A.2.a above, many of the instances where commenters pointed to remote monitored locations having O_3 exceedances due to background O_3 in fact reflected sizeable contributions from domestic sources, including interstate contributions (including from the Los Angeles Basin and other California locations).

as part of attaining the revised O_3 standards are locations in the western U.S. where we have estimated the largest seasonal average values of background O_3 occur. We expect some of these areas to use the provisions in the Exceptional Events Rule during the designations process for the revised O_3 standards. The EPA will then give priority to exceptional events demonstrations submitted by air agencies with areas whose designation decision could be influenced by the exclusion of data under the Exceptional Events Rule. In addition, as discussed in more detail in sections V.D and VIII.B.2 of this action, to streamline the exceptional events process, the EPA will soon propose revisions to the 2007 Exceptional Events Rule and will release through a *Federal Register* Notice of Availability a draft guidance document to address Exceptional Events Rule criteria for wildfires that could affect O_3 concentrations. We expect to promulgate Exceptional Events Rule revisions and finalize the new guidance document before the October 2016 date by which states, and any tribes that wish to do so, are required to submit their initial designation recommendations for the revised O_3 NAAQS.

4. Section 110 State Implementation Plans

The CAA section 110 specifies the general requirements for SIPs. Within three years after the promulgation of revised NAAQS (or such shorter period as the Administrator may prescribe[231]) each state must adopt and submit "infrastructure" SIPs to the EPA to address the requirements of section 110(a)(1) and (2), as applicable. These "infrastructure SIP" submissions establish the basic state programs to implement, maintain, and enforce revised NAAQS and provide assurances of state resources and authorities. States are required to develop and maintain an air quality management infrastructure that includes enforceable emission limitations, a

[231] While the CAA allows the EPA to set a shorter time for submission of these SIPs, the EPA does not currently intend to do so for this revision to the O_3 NAAQS.

permitting program, an ambient monitoring program, an enforcement program, air quality modeling capabilities, and adequate personnel, resources, and legal authority. Because the revised primary NAAQS and secondary NAAQS are identical, the EPA does not at present discern any need for there to be any significant substantive difference in the infrastructure SIP elements for the two standards and thus believes it would be more efficient for states and the EPA if each affected state submits a single section 110 infrastructure SIP that addresses both standards at the same time (i.e., within three years of promulgation of the O_3 NAAQS). Accordingly the EPA is not extending the SIP deadline for purposes of a revised secondary standard.

It is the responsibility of each state to review its air quality management program's compliance with the infrastructure SIP provisions in light of each new or revised NAAQS. Most states have revised and updated their infrastructure SIPs in recent years to address requirements associated with 2008 O3 NAAQS. We expect that the result of these prior updates is that, in most cases, states will already have adequate state regulations previously adopted and approved into the SIP to address a particular requirement with respect to the revised O_3 NAAQS. For such portions of the state's infrastructure SIP submission, the state may provide a "certification" specifying that certain existing provisions in the SIP are adequate to meet applicable requirements. Although the term "certification" does not appear in the CAA as a type of infrastructure SIP submittal, the EPA sometimes uses the term in the context of infrastructure SIPs, by policy and convention, to refer to a state's SIP submission. If a state determines that its existing EPA-approved SIP provisions are adequate in light of the revised O_3 NAAQS with respect to a given infrastructure SIP element (or sub-element), then the state may make a "certification" that the existing SIP contains provisions that address those requirements of the

specific CAA section 110(a)(2) infrastructure elements. In the case of a certification, the submittal does not have to include another copy of the relevant provision (e.g., rule or statute) itself. Rather, the submission may provide citations to the already SIP-approved state statutes, regulations, or non-regulatory measures, as appropriate, which meet the relevant CAA requirement. Like any other SIP submission, such certification can be made only after the state has provided reasonable notice and opportunity for public hearing. This "reasonable notice and opportunity for public hearing" requirement for infrastructure SIP submittals appears at section 110(a), and it comports with the more general SIP requirement at section 110(l) of the CAA. Under the EPA's regulations at 40 CFR part 51, if a public hearing is held, an infrastructure SIP submission must include documentation by the state that the public hearing was held in accordance with the EPA's procedural requirements for public hearings. See 40 CFR part 51, Appendix V, paragraph 2.1(g), and 40 CFR 51.102. In the event that a state's existing SIP does not already meet applicable requirements, then the infrastructure SIP submission must include the modifications or additions to the state's SIP in order to update it to meet the relevant elements of section 110(a)(2).

5. Nonattainment Area Requirements

Part D of the CAA describes the various program requirements that apply to states with nonattainment areas for different NAAQS. Clean Air Act Section 182 (found in subpart 2 of part D) includes the specific SIP requirements that govern the O_3 program, and supplements the more general nonattainment area requirements in CAA sections 172 and 173. Under CAA section 182, states generally are required to submit attainment demonstration SIPs within three or four years after the effective date of area designations promulgated by the EPA, depending on the

classification of the area.[232] These SIP submissions need to show how the nonattainment area will attain the primary O_3 standard "as expeditiously as practicable," but no later than within the relevant time frame from the effective date of designations associated with the classification of the area.

The EPA believes that the overall framework and policy approach of the implementation rules associated with the 2008 O_3 NAAQS provide an effective and appropriate template for the general approach states would follow in planning for attainment of the revised O_3 standard.[233] However, to assist with the implementation of the revised O_3 standards, the EPA intends to develop and propose an additional O_3 NAAQS Implementation Rule that will address certain subjects specific to the new O_3 NAAQS finalized here. This will include establishing air quality thresholds associated with each nonattainment area classification (i.e., Marginal, Moderate, etc.), associated attainment deadlines, and deadlines for submitting attainment planning SIP elements (e.g., RACT for major sources, RACT VOC control techniques guidelines, etc.). The rulemaking will also address whether to revoke the 2008 O_3 NAAQS, and to impose appropriate anti-backsliding requirements to ensure that the protections afforded by that standard are preserved. The EPA intends to propose this implementation rule within one year after the revised O_3 NAAQS is promulgated, and finalize this implementation rule by no later than the time the area

[232] Section 181(a)(1) of the CAA establishes classification categories for areas designated nonattainment for the primary O_3 NAAQS. These categories range from "Marginal," the lowest O_3 classification with the fewest requirements associated with it, to "Extreme," the highest classification with the most required programs. Areas with worse O_3 problems are given more time to attain the NAAQS and more associated emission control requirements.
[233] Implementation of the 2008 National Ambient Air Quality Standards for Ozone: State Implementation Plan Requirements; Final Rule (80 FR 12264; March 6, 2015) and Implementation of the 2008 National Ambient Air Quality Standards for Ozone: Nonattainment Area Classifications Approach, Attainment Deadlines and Revocation of the 1997 Ozone Standards for Transportation Conformity Purposes (77 FR 30160; May 21, 2012).

designations process is finalized (approximately two years after promulgation of the revised O_3 NAAQS).

We know that developing the implementation plans that outline the steps a nonattainment area will take to meet an air quality standard requires a significant amount of work on the part of state, tribal or local air agencies. The EPA routinely looks for ways to reduce this workload, including assisting with air quality modeling by providing inputs such as emissions, meteorological and boundary conditions; and sharing national-scale model results that states can leverage in their development of attainment demonstrations.

B. O_3 Air Quality Designations

1. Area Designation Process

After the EPA establishes or revises a NAAQS, the CAA directs the EPA and the states to take steps to ensure that the new or revised NAAQS is met. One of the first steps, known as the initial area designations, involves identifying areas of the country that either meet or do not meet the new or revised NAAQS, along with any nearby areas that contribute to areas that do not meet the new or revised NAAQS.

Section 107(d)(1) of the CAA provides that, "By such date as the Administrator may reasonably require, but not later than 1 year after promulgation of a new or revised national ambient air quality standard for any pollutant under section 109, the Governor of each state shall ... submit to the Administrator a list of all areas (or portions thereof) in the state" that designates those areas as nonattainment, attainment, or unclassifiable. The EPA must then promulgate the area designations according to a specified process, including procedures to be followed if the EPA intends to modify a state's initial recommendation.

Clean Air Act Section 107(d)(1)(B)(i) further provides, "Upon promulgation or revision

of a national ambient air quality standard, the Administrator shall promulgate the designations of all areas (or portions thereof) ... as expeditiously as practicable, but in no case later than 2 years from the date of promulgation of the new or revised national ambient air quality standard. Such period may be extended for up to one year in the event the Administrator has insufficient information to promulgate the designations." By no later than 120 days prior to promulgating area designations, the EPA is required to notify states of any intended modifications to their recommendations that the EPA may deem necessary. States then have an opportunity to demonstrate why any proposed modification is inappropriate. Whether or not a state provides a recommendation, the EPA must timely promulgate the designation that the agency deems appropriate.

While section 107 of the CAA specifically addresses states, the EPA intends to follow the same process for tribes to the extent practicable, pursuant to CAA section 301(d) regarding tribal authority and the Tribal Authority Rule (63 FR 7254, February 12, 1998). To provide clarity and consistency in doing so, the EPA issued a 2011 guidance memorandum on working with tribes during the designation process.[234]

As discussed in sections II and IV of this preamble, the EPA is revising both the primary and secondary O_3 NAAQS. Accordingly, the EPA intends to complete designations for both NAAQS following the standard 2-year process discussed above. In accordance with section 107(d)(1) of the CAA, state Governors (and tribes, if they choose) should submit their initial designation recommendations for a revised primary and secondary NAAQS by 1 year after

[234] Page, S. (2011). Guidance to Regions for Working with Tribes during the National Ambient Air Quality Standards (NAAQS) Designations Process, Memorandum from Stephen D. Page, Director, EPA Office of Air Quality Planning and Standards to Regional Air Directors, Regions I-X, December 20, 2011. Available: http://www.epa.gov/ttn/oarpg/t1/memoranda/20120117naaqsguidance.pdf.

[INSERT DATE OF SIGNATURE]. If the EPA intends to modify any state recommendation, the EPA would notify the appropriate state Governor (or tribal leader) no later than 120 days prior to making final designation decisions. A state or tribe that believes the modification is inappropriate would then have the opportunity to demonstrate to the EPA why it believes its original recommendation (or a revised recommendation) is more appropriate. The EPA would take any additional input into account in making the final designation decisions.

The CAA defines an area as nonattainment if it is violating the NAAQS or if it is contributing to a violation in a nearby area. Consistent with previous area designations processes, the EPA intends to use area-specific analysis of multiple factors to support area boundary decisions. The EPA intends to evaluate information related to the following factors for designations: air quality data, emissions and emissions-related data, meteorology, geography/topography, and jurisdictional boundaries. Additional guidance on the designation process and how these factors may be evaluated and inform the process will be issued by the EPA early in 2016 to assist states in developing their recommendations.

Areas that are designated as nonattainment are also classified at the time of designation by operation of law according to the severity of their O_3 problem. The classification categories are Marginal, Moderate, Serious, Severe, and Extreme. Ozone nonattainment areas are subject to specific mandatory measures depending on their classification. As indicated previously, the thresholds for the classification categories will be established in a future O_3 implementation rule.

Clean Air Act section 182(h) authorizes the EPA Administrator to determine that an area designated nonattainment can be treated as a rural transport area. Regardless of its classification, a rural transport area is deemed to have fulfilled all O_3-related planning and control requirements if it meets the CAA's requirements for areas classified Marginal, which is the lowest

classification specified in the CAA. In accordance with the statute, a nonattainment area may qualify for this determination if it meets the following criteria:

- The area does not contain emissions sources that make a significant contribution to monitored O_3 concentrations in the area, or in other areas; and
- The area does not include and is not adjacent to a Metropolitan Statistical Area.

Historically, the EPA has listed four nonattainment areas as rural transport areas under this statutory provision.[235] The EPA has not issued separate written guidance to further elaborate on the interpretation of these CAA qualification criteria. However, the EPA developed draft guidance in 2005 that explains the kinds of technical analyses that states could use to establish that transport of O_3 and/or O_3 precursors into the area is so overwhelming that the contribution of local emissions to an observed 8-hour O_3 concentration above the level of the NAAQS is relatively minor and determine that emissions within the area do not make a significant contribution to the O_3 concentrations measured in the area or in other areas.[236] While this guidance was not prepared specifically for rural transport areas, it could be useful to states for developing technical information to support a request that the EPA treat a specific O_3 nonattainment area as a rural transport area. The EPA will work with states to ensure nonattainment areas eligible for treatment as rural transport areas are identified.

2. Exceptional Events

---

[235] For the 1979 1-hour O_3 standard, Door County Area, Wisconsin; Edmonson County Area, Kentucky; Essex County Area (Whiteface Mountain), New York; and Smyth County Area (White Top Mountain), Virginia were recognized by the EPA as rural transport areas. No rural transport areas were recognized for the 1997 or 2008 8-hour O_3 standards.

[236] U.S. Environmental Protection Agency (2005). Criteria For Assessing Whether an Ozone Nonattainment Area is Affected by Overwhelming Transport [Draft EPA Guidance]. U.S. Environmental Protection Agency, Research Triangle Park, NC. June 2005. Available at http://www.epa.gov/scram001/guidance/guide/owt_guidance_07-13-05.pdf.

During the initial area designations process, the EPA intends to evaluate multiple factors, including air quality data, when identifying and determining boundaries for areas of the country that meet or do not meet the revised O_3 NAAQS. In some cases, these data may be influenced by exceptional events. Under the Exceptional Events Rule, an air agency can request and the EPA can agree to exclude data associated with event-influenced exceedances or violations of a NAAQS, including the revised O_3 NAAQS, provided the event meets the statutory requirements in section 319(b) of the CAA, which requires that:

- the event "affects air quality;"
- the event "is not reasonably controllable or preventable;"
- the event is "caused by human activity that is unlikely to recur at a particular location or [is] a natural event,"[237] and
- that "a clear causal relationship must exist between the measured exceedances of a [NAAQS] and the exceptional event…."

The EPA's implementing regulations, the Exceptional Events Rule, further specify certain requirements for air agencies making exceptional events demonstrations[238]

The ISA contains discussions of natural events that may contribute to O_3 or O_3 precursors. These include stratospheric O_3 intrusion and wildfire events.[239] As indicated above, to satisfy the exceptional events requirements and to qualify for data exclusion under the Exceptional Events

[237] A natural event is further described in 40 CFR 50.1(k) as "an event in which human activity plays little or no direct causal role."
[238] 72 FR 13,560 (March 22, 2007), "Treatment of Data Influenced by Exceptional Events," Final Rule; *see also* 40 CFR parts 50 and 51.
[239] The preamble to the Exceptional Events Rule (72 FR 13560) identifies both stratospheric O_3 intrusions and wildfires as natural events that could also qualify as exceptional events under the CAA and Exceptional Event Rule criteria. Note that O_3 resulting from routine natural emissions from vegetation, microbes, animals and lightning are not exceptional events authorized for exclusion under the section 319 of the CAA.

Rule, an air agency must develop and submit a demonstration, including evidence, addressing each of the identified criteria. The extent to which a stratospheric O_3 intrusion event or a wildfire event contributes to O_3 levels can be uncertain, and in most cases requires detailed analyses to determine.

Strong stratospheric O_3 intrusion events, most prevalent at high elevation sites during winter or spring, can be identified based on measurements of low relative humidity, evidence of deep atmospheric mixing, and a low ratio of CO to O_3 based on ambient measurements. Accurately determining the extent of weaker intrusion events remains challenging (U.S. EPA 2013, p. 3-34). Although states have submitted only a few exceptional events demonstrations for stratospheric O_3 intrusion, the EPA recently approved a demonstration from Wyoming for a June 2012 stratospheric O_3 event.[240]

While stratospheric O_3 intrusions can increase monitored ground-level ambient O_3 concentrations, wildfire plumes can either suppress or enhance O_3 depending upon a variety of factors including fuel type, combustion stage, plume chemistry, aerosol effects, meteorological conditions and distance from the fire (Jaffe and Wigder, 2012). As a result, determining the impact of wildfire emissions on specific O_3 observations is challenging. The EPA recently approved an exceptional events demonstration for wildfires affecting 1-hour O_3 levels in Sacramento, California in 2008 that successfully used a variety of analytical tools (e.g., regression modeling, back trajectories, satellite imagery, etc.) to support the exclusion of O_3 data

[240] U.S. EPA (2014) Treatment of Data Influenced by Exceptional Events: Examples of Reviewed Exceptional Event Submissions. U.S. Environmental Protection Agency, Research Triangle Park, NC, *available at* http://www.epa.gov/ttn/analysis/exevents.htm.

affected by large fires.[241]

In response to previously expressed stakeholder feedback regarding implementation of the Exceptional Events Rule and specific stakeholder concerns regarding the burden of exceptional events demonstrations, the EPA is currently engaged in a rulemaking process to amend the Exceptional Events Rule. As part of an upcoming notice and comment rulemaking effort (and related activities, including the issuance of relevant guidance documents), the EPA sees opportunities to standardize best practices for collaboration between the EPA and air agencies, clarify and simplify demonstrations, and improve tools and consistency.

Additionally, the EPA intends to develop guidance to address implementing the Exceptional Events Rule criteria for wildfires that could affect ambient O_3 concentrations. Wildfire emissions are a component of background O_3 (Jaffe and Wigder, 2012) and in some locations can significantly contribute to periodic high O_3 levels (Emery, 2012). The threat from wildfires can be mitigated through management of wildland vegetation. Planned and managed fires are one tool that land managers can use to reduce fuel load, unnatural understory and tree density, thus helping to reduce the risk of catastrophic wildfires. Allowing some wildfires to continue and the thoughtful use of prescribed fire can influence the occurrence of catastrophic wildfires, which may reduce the probability of fire-induced smoke impacts and subsequent health effects. Thus, appropriate use of prescribed fire may help manage the contribution of wildfires to both background and periodic peak O_3 air pollution. Several commenters expressed concern that the revised O_3 NAAQS could limit the future use of prescribed fire. Under the

[241] U.S. EPA (2014) Treatment of Data Influenced by Exceptional Events: Examples of Reviewed Exceptional Event Submissions. U.S. Environmental Protection Agency, Research Triangle Park, NC. Examples of O_3-related exceptional event submissions, *available at* http://www.epa.gov/ttn/analysis/exevents.htm.

current Exceptional Events Rule, prescribed fires meeting the rule criteria may also qualify as exceptional events. The EPA intends to further clarify the Exceptional Events Rule criteria for prescribed fire on wildland in its upcoming rulemaking.

The EPA is committed to working with federal land managers, other federal agencies, tribes and states to effectively manage prescribed fire use to reduce the impact of wildfire-related emissions on O_3 through policies and regulations implementing these standards.

C. How do the New Source Review (NSR) Requirements apply to the Revised O_3 NAAQS?

1. NSR Requirements for Major Stationary Sources for the Revised O_3 NAAQS

The CAA, at parts C and D of title I, contains preconstruction review and permitting programs applicable to new major stationary sources and major modifications of existing major sources. The preconstruction review of each new major stationary source and major modification applies on a pollutant-specific basis, and the requirements that apply for each pollutant depend on whether the area in which the source is situated is designated as attainment (or unclassifiable) or nonattainment for that pollutant. In areas designated attainment or unclassifiable for a pollutant, the PSD requirements under part C apply to construction at major sources. In areas designated nonattainment for a pollutant, the NNSR requirements under part D apply to major source construction. Collectively, those two sets of permit requirements are commonly referred to as the "major New Source Review" or "major NSR" programs.

Until an area is formally designated with respect to the revised O_3 NAAQS, the NSR provisions applicable under that area's current designation for the 2008 O_3 NAAQS (including any applicable anti-backsliding requirements) will continue to apply. That is, for areas designated as attainment/unclassifiable for the 2008 O_3 NAAQS, PSD will apply for new major stationary sources and major modifications that trigger major source permitting requirements for

O_3; areas designated nonattainment for the 2008 O_3 NAAQS must comply with the NNSR requirements for new major stationary sources and major modifications that trigger major source permitting requirements for O_3. When the new designations for the revised O_3 NAAQS become effective, under the current rules, those designations will generally serve to determine whether PSD or NNSR applies to O_3 and its precursors. The PSD regulations at 40 CFR 51.166(i)(2) and 52.21(i)(2) provide that the substantive PSD requirements do not apply for a particular pollutant if the owner or operator of the new major stationary source or major modification demonstrates that the area in which the source is located is designated nonattainment for that pollutant under CAA section 107. Thus, new major sources and modifications will generally be subject to the PSD program requirements for O_3 if they are locating in an area that does not have a current nonattainment designation under CAA section 107 for O_3. These rules further provide that nonattainment designations for a revoked NAAQS, as contained in 40 CFR part 81, are not viewed as current designations under CAA section 107 for purposes of determining the applicability of such PSD requirements.[242]

The EPA's major NSR regulations define the term "regulated NSR pollutant" to include any pollutant for which a NAAQS has been promulgated and any pollutant identified in EPA regulations as a constituent or precursor to such pollutant.[243] Both the PSD and NNSR regulations identify VOC and NO_X as precursors to O_3. Accordingly, the major NSR programs

[242] This description of paragraph (i)(2) of the PSD regulations at 40 CFR 51.166 and 52.21 reflects revisions made in the final 2008 O_3 NAAQS SIP Requirements Rule. *See* 80 FR 12264 at 12287 (March 6, 2015).
[243] The definition of "regulated NSR pollutant" is found in the PSD regulations at 40 CFR 51.166(b)(49) and 52.21(b)(50), and in the NNSR regulations at 40 CFR 51.165(a)(1)(xxxvii).

for O_3 are applied to emissions of VOC and NO_X as precursors of O_3.[244]

2. Prevention of Significant Deterioration (PSD) Program

The statutory requirements for a PSD permit program set forth under part C of title I of the CAA (sections 160 through 169) are addressed by the EPA's PSD regulations found at 40 CFR 51.166 (minimum requirements for an approvable PSD SIP) and 40 CFR 52.21 (PSD permitting program for permits issued under the EPA's federal permitting authority). Both sets of regulations already apply for O_3 when the area is designated attainment or unclassifiable for O_3 and when the new source or modification triggers PSD requirements for O_3.

For PSD, a "major stationary source" is one that emits or has the potential to emit 250 tons per year (tpy) or more of any regulated NSR pollutant, unless the new or modified source is classified under a list of 28 source categories contained in the statutory definition of "major emitting facility" in section 169(1) of the CAA. For those 28 source categories, a "major stationary source" is one that emits or has the potential to emit 100 tpy or more of any regulated NSR pollutant. A "major modification" is a physical change or a change in the method of operation of an existing major stationary source that results first, in a significant emissions increase of a regulated NSR pollutant for the project, and second, in a significant net emissions increase of that pollutant at the source. *See* 40 CFR 51.166(b)(2)(i), 40 CFR 52.21(b)(2)(i).

Among other things, for each regulated NSR pollutant emitted or increased in significant amounts, the PSD program requires a new major stationary source or a major modification to apply Best Available Control Technology and to conduct an air quality impact analysis to demonstrate that the proposed source or project will not cause or contribute to a violation of any

[244] VOC and NOX are defined as precursors of ozone in the PSD regulations at 40 CFR 51.166(b)(49)(i)(b)(1) and 52.21(b)(50)(i)(b)(1), and in the NNSR regulations at 40 CFR 51.165(a)(1)(xxxvii)(B) and (C)(1) and part 51, Appendix S, II.A.31(ii)(b)(1).

NAAQS or PSD increment (*see* CAA section 165(a)(3)-(4), 40 CFR 51.166(j)-(k), 40 CFR 52.21(j)-(k)). The PSD requirements may also include, in appropriate cases, an analysis of potential adverse impacts on Class I areas (*see* CAA sections 162 and 165).[245] The EPA has generally interpreted the requirement for an air quality impact analysis under CAA section 165(a)(3) and the implementing regulations to include a requirement to demonstrate that emissions from the proposed facility will not cause or contribute to a violation of any NAAQS that is in effect as of the date a PSD permit is issued.[246] S*ee, e.g.*, 73 FR 28321, 28324, 28340 (May 16, 2008); 78 FR 3253 (Jan. 15, 2013); Memorandum from Stephen D. Page, Director, Office of Air Quality Planning & Standards, "Applicability of the Federal Prevention of Significant Deterioration Permit Requirements to New and Revised National Ambient Air Quality Standards" (April 1, 2010). Consistent with this interpretation, the demonstration required under CAA section 165(a)(3) and 40 CFR 51.166(k) and 52.21(k) will apply to any revised O_3 NAAQS when such NAAQS become effective, except to the extent that a pending permit application is subject to a grandfathering provision that the EPA establishes through

[245] Congress established certain Class I areas in section 162(a) of the CAA, including international parks, national wilderness areas, and national parks that meet certain criteria. Such Class I areas, known as mandatory federal Class I areas, are afforded special protection under the CAA. In addition, states and tribal governments may establish Class I areas within their own political jurisdictions to provide similar special air quality protection.

[246] An exception occurs in cases where the EPA has included a grandfathering provision in its PSD regulations for a particular pollutant. The EPA historically has exercised its discretion to transition the implementation of certain new requirements through grandfathering, under appropriate circumstances, either by rulemaking or through a case-by-case determination for a specific permit application. In 2014, the United States Court of Appeals for the Ninth Circuit vacated a decision by the EPA to issue an individual PSD permit grandfathering a permit applicant from certain requirements. *See Sierra Club v. EPA*, 762 F.3d 971 (9th Cir. 2014). In light of that decision, the EPA is no longer asserting authority to grandfather permit applications on a case-by-case basis. This decision is addressed in more detail in the discussion of the grandfathering provisions that the EPA is issuing through this rulemaking in section VII of this preamble.

rulemaking. In addition, the other existing requirements of the PSD program will remain applicable to O_3 after the revised O_3 NAAQS takes effect.

Because the complex chemistry of O_3 formation in the atmosphere poses significant challenges for the assessing the impacts of individual stationary sources on O_3 formation, the EPA's judgment historically has been that it is not technically sound to designate a specific air quality model that must be used in the PSD permitting process to make this demonstration for O_3. To address ambient impacts of emissions from proposed individual stationary sources on O_3, the EPA proposed amendments to Appendix W to 40 CFR part 51 in July 2015 that would, among other things, revise the Appendix W provisions relating to the analytical techniques for demonstrating that an individual PSD source or modification does not cause or contribute to a violation of the O_3 NAAQS (80 FR 45340, July 29, 2015). Until any revisions are finalized and in effect, PSD permit applicants should continue to follow the current provisions in the applicable regulations and Appendix W in order to demonstrate that a proposed source or modification does not cause or contribute to a violation of the O_3 NAAQS.

a. What Transition Plan is the EPA Providing for Implementing the PSD Requirements for the Revised O_3 NAAQS?

In this rulemaking, the EPA is amending the PSD regulations at 40 CFR 51.166 and 40 CFR 52.21 to include a grandfathering provision that will allow reviewing authorities to continue to review certain pending PSD permit applications in accordance with the O_3 NAAQS that was in effect when a specific permitting milestone was reached, rather than the revised O_3 NAAQS. The EPA is finalizing the grandfathering provision as proposed with two trigger dates—the signature date of the revised O_3 NAAQS rule for complete applications and the effective date of the revised O_3 NAAQS for a draft permit or preliminary determination. A more detailed

discussion of the final provision, comments received and our responses to those comments is provided in section VII of this preamble, which addresses this change to the PSD regulations, as well as the Response to Comment Document contained in the docket for this rulemaking.

b. What Screening and Compliance Demonstration Tools are Used to Implement the PSD Program?

The EPA has historically allowed the use of screening and compliance demonstration tools to help facilitate the implementation of the NSR program by reducing the source's burden and streamlining the permitting process for circumstances where the emissions or ambient impacts of a particular pollutant could be considered *de minimis*. For example, the EPA has established significant emission rates, or SERs, that are used as screening tools to determine when a pollutant would be considered to be emitted in a significant amount and, accordingly, when the NSR requirements should be applied to that pollutant. *See* 40 CFR 51.166(b)(23) and 52.21(b)(23). For O_3, the EPA established a SER of 40 tpy for emissions of each O_3 precursor—VOC and NO_X. For PSD, the O_3 SER applies independently to emissions of VOC and NO_X (emissions of precursors are not added together) to determine when the proposed major stationary source or major modification must undergo PSD review for that precursor and whether individual PSD requirements, such as BACT, apply to that precursor.[247]

In the context of the PSD air quality impact analysis, the EPA has also used a value called a significant impact level (SIL) as a compliance demonstration tool. The SIL, expressed as an ambient concentration of a pollutant, may be used first to determine the geographical scope of

[247] *See In re Footprint Power Salem Harbor Development, LP*, 16 E.A.D ___, PSD Appeal No. 14-02, at 20-25 (EAB, Sept. 2, 2014) (including description of EPA's position on application of BACT to ozone precursors) *available at* http://yosemite.epa.gov/oa/EAB_Web_Docket.nsf/PSD+Permit+Appeals+(CAA)?OpenView.

the ambient impact analysis that must be completed for the applicable pollutant to satisfy the air quality demonstration requirement under CAA section 165(a)(3). A second use is to guide the determination of whether the impact of the source is considered to cause or contribute to a violation of any NAAQS. The EPA has not established a SIL for O_3. The EPA is currently considering development of a SIL for O_3 through either guidance or a rulemaking process. Such a SIL would complement proposed revisions to Appendix W mentioned above (80 FR 45340, July 29, 2015) and would assist in the implementation of the PSD air quality analysis requirement for protection of the O_3 NAAQS. However, the EPA is not making revisions in this rulemaking to address the PSD air quality analysis for O_3. Until any rulemaking to amend existing PSD regulations for O_3 is completed, permitting decisions should continue to be based on the existing provisions in the applicable regulations.

Several commenters addressed statements that the EPA made concerning screening tools for O_3 in the preamble to the O_3 NAAQS proposal. These statements were not linked to any proposed amendments to EPA regulations. Aside from adopting the grandfathering provision addressed in section VII of this preamble, the EPA is not revising the PSD requirements for O_3 in this final rule. Therefore, the EPA is not responding to those comments at this time, consistent with the EPA's general approach to comments on implementation topics described above.

c. Other PSD Transition Issues

The EPA anticipates that the existing O_3 air quality in some areas currently designated attainment of unclassifiable for O_3 will not meet the revised O_3 NAAQS upon its effective date and that some of these areas will ultimately be designated "nonattainment" for the revised O_3 NAAQS through the formal area designation process set forth under the CAA (see section VIII.B above). However, until the EPA issues such nonattainment designations, proposed new major

sources and major modifications situated in any area designated attainment or unclassifiable for the 2008 O_3 NAAQS will continue to be required to address O_3 in a PSD permit.[248] As mentioned above, the PSD permitting program requires that proposed new major stationary sources and major modifications must demonstrate that the emissions from the proposed source or modification will not cause or contribute to a violation of any NAAQS. In the notice of proposed rulemaking, the EPA provided information concerning its views on the possibility that some PSD permit applications could satisfy the air quality analysis requirements for O_3 by obtaining air quality offsets (called PSD offsets).[249] Several commenters expressed concern that without some transition provisions in the final rule exempting PSD permit applications for sources located in such areas from meeting the air quality analysis requirements for the revised O_3 NAAQS, such applications might not be able to satisfy the demonstration requirement, as the current ambient air monitoring data indicate the revised lower standards are not being met. The O_3 NAAQS proposal included no proposed revisions to PSD regulations on this topic and the EPA is not making any revisions to the PSD requirements for O_3 in this action to address this issue. Therefore, the EPA is not responding to those comments at this time, consistent with its general approach to comments on implementation topics described above. However, to help address this concern raised by commenters, the EPA is considering issuing additional guidance

---

[248] Any proposed major stationary source or major modification subject to PSD for O_3 that does not receive its PSD permit by the effective date of a new O_3 nonattainment designation for the area where the source would locate would then be required to satisfy all of the applicable NNSR preconstruction permit requirements for O_3, even if such source had been grandfathered under the PSD regulations from the demonstration requirement under CAA section 165(a)(3) for O_3.
[249] The EPA has historically recognized in regulations and through other actions that sources applying for PSD permits may have the option of utilizing offsets as part of the required PSD demonstration under CAA section 165(a)(3)(B). *See*, *e.g., In re Interpower of New York, Inc.*, 5 E.A.D. 130, 141 (EAB 1994) (describing an EPA Region 2 PSD permit that relied in part on offsets to demonstrate the source would not cause or contribute to a violation of the NAAQS). 52 FR 24698 (July 1, 1987); 78 FR 3261-62 (Jan. 15, 2013).

on how PSD offsets can be implemented.

3. Nonattainment NSR

Part D of title I of the CAA includes preconstruction review and permitting requirements for new major stationary sources and major modifications when they locate in areas designated nonattainment for a particular pollutant. The relevant part D requirements are typically referred to as the nonattainment NSR (NNSR) program. The EPA regulations for the NNSR program are contained at 40 CFR 51.165, 52.24 and part 51 Appendix S. The EPA's minimum requirements for a NNSR program to be approvable into a SIP are contained in 40 CFR 51.165. Appendix S to 40 CFR part 51 contains an interim NNSR program. This interim program enables implementation of NNSR permitting in nonattainment areas that lack a SIP-approved NNSR permitting program for the particular nonattainment pollutant, and the interim program can be applied during the time between the date of the relevant nonattainment designation and the date on which the EPA approves into the SIP a NNSR program or additional components of an NNSR program for a particular pollutant.[250] This interim program is commonly known as the Emissions Offset Interpretative Rule, and is applicable to all criteria pollutants, including O_3.[251]

The EPA is not modifying any existing NNSR requirements in this rulemaking. Under the CAA, area designations for new or revised NAAQS are addressed subsequent to the effective date of the new or revised NAAQS. If the EPA determines that any revisions to the existing NNSR requirements, including those in Appendix S, are appropriate, the EPA expects, at a later date contemporaneous with the designation process for the revised O_3 NAAQS, to propose those

[250] *See* Appendix S, Part I; 40 CFR 52.24(k).
[251] As appropriate, certain NNSR requirements under 40 CFR 51.165 or Appendix S can also apply to sources and modifications located in areas that are designated attainment or unclassifiable in the Ozone Transport Region. *See, e.g.,* CAA 184(b)(2), 40 C.F.R. 52.24(k).

revisions. If any changes are proposed to Appendix S requirements, the EPA anticipates that it would intend for those changes to become effective no later than the effective date of the area designations. This timing would allow air agencies that lack an approved NNSR program for O_3 to use the relevant Appendix S provisions to issue NNSR permits addressing O_3 on and after the effective date of designations of new nonattainment areas for O_3 until such time as a NNSR program for O_3 is approved into the SIP[252].

For NNSR, new major stationary sources and major modifications for O_3 must comply with the Lowest Achievable Emission Rate (LAER) requirements as defined in the CAA and NNSR rules, and must perform other analyses and satisfy other requirements under section 173 of the CAA. For example, under CAA section 173(c) emissions reductions, known as emissions offsets, must be secured to offset the increased emissions of the air pollutant (including the relevant precursors) from the new or modified source by an equal or greater reduction, as applicable, of such pollutant. The appropriate emissions offset needed for a particular source will depend upon the classification for the O_3 nonattainment area in which the source or modification will locate, such that areas with more severe nonattainment classifications have more stringent offset requirements. This ranges from 1.1:1 for areas classified as Marginal to 1.5:1 for areas classified as Extreme. *See, e.g.,* CAA section 182, 40 CFR 51.165(a)(9) and 40 CFR part 51 Appendix S section IV.G.2.

To facilitate continued economic development in nonattainment areas, many states have established offset banks or registries.[253] Such banks or registries can help new or modified major

[252] States with SIP-approved NNSR programs for O_3 should evaluate that program to determine whether they can continue to issue permits under their approved program or whether revisions to their program are necessary to address the revised O_3 NAAQS.
[253] *See*, for example, emission reduction credit banking programs in Ohio (OAC Chapter 3745-1111) and California (H&SC Section 40709).

stationary source owners meet offset requirements by streamlining identification and access to available emissions reductions. Some states have established offset banks to help ensure a consistent method for generating, validating and transferring NO_X and VOC offsets. Offsets in these areas are generated by emissions reductions that meet specific creditability criteria set forth by the SIP consistent with the EPA regulations. *See* 40 CFR 51.165(a)(3)(ii)(A)-(J) and part 51 Appendix S section IV.C. The EPA received comments expressing concern about the limited availability of offsets in nonattainment areas. Since the EPA did not propose, and is not finalizing, any amendments related to the NNSR offset provisions, the EPA is not responding to those comments at this time, consistent with the EPA's general approach to comment on implementation topics as described above.

D. Transportation and General Conformity

1. What are Transportation and General Conformity?

Conformity is required under CAA section 176(c) to ensure that federal actions are consistent with ("conform to") the purpose of the SIP. Conformity to the purpose of the SIP means that federal activities will not cause new air quality violations, worsen existing violations, or delay timely attainment of the relevant NAAQS or interim reductions and milestones. Conformity applies to areas that are designated nonattainment, and those nonattainment areas redesignated to attainment with a CAA section 175A maintenance plan after 1990 ("maintenance areas").

The EPA's Transportation Conformity Rule (40 CFR 51.390 and part 93, subpart A) establishes the criteria and procedures for determining whether transportation activities conform to the SIP. These activities include adopting, funding or approving transportation plans, transportation improvement programs (TIPs) and federally supported highway and transit

projects. For further information on conformity rulemakings, policy guidance and outreach materials, *see* the EPA's website at *http://www.epa.gov/otaq/stateresources/transconf/index.htm*. The EPA may issue future transportation conformity guidance as needed to implement a revised O_3 NAAQS.

With regard to general conformity, the EPA first promulgated general conformity regulations in November 1993. (40 CFR part 51, subpart W, 40 CFR part 93, subpart B) Subsequently the EPA finalized revisions to the general conformity regulations on April 5, 2010. (75 FR 17254-17279). Besides ensuring that federal actions not covered by the transportation conformity rule will not interfere with the SIP, the general conformity program also fosters communications between federal agencies and state/local air quality agencies, provides for public notification of and access to federal agency conformity determinations, and allows for air quality review of individual federal actions. More information on the general conformity program is available at *http://www.epa.gov/air/genconform/*.

2. When Would Transportation and General Conformity Apply to Areas Designated Nonattainment for the Revised O_3 NAAQS?

Transportation and general conformity apply one year after the effective date of nonattainment designations for the revised O_3 NAAQS. This is because CAA section 176(c)(6) provides a 1-year grace period from the effective date of initial designations for any revised NAAQS before transportation and general conformity apply in areas newly designated nonattainment for a specific pollutant and NAAQS.

3. Impact of a Revised O_3 NAAQS on a State's Existing Transportation and/or General Conformity SIP.

In this final rule, the EPA is revising the O_3 NAAQS, but is not making specific changes

to its transportation or general conformity regulations. Therefore, states should not need to revise their transportation and/or general conformity SIPs. While we are not making any revisions to the general conformity regulations at this time, we recommend, when areas develop SIPs for a revised O_3 NAAQS, that state and local air quality agencies work with federal agencies with large emitting activities that are subject to the general conformity regulations to establish an emissions budget for those facilities and activities in order to facilitate future conformity determinations under the conformity regulations. Finally, states with existing conformity SIPs and new nonattainment areas may also need to revise their conformity SIPs in order to ensure the state regulations apply in any newly designated areas.

Because significant tracts of land under federal management may be included in nonattainment area boundaries, the EPA encourages state and local air quality agencies to work with federal agencies to assess and develop emissions budgets that consider emissions from projects subject to general conformity, including emissions from fire on wildland, in any baseline, modeling and SIP attainment inventory. Where appropriate, states, land managers, and landowners may also consider developing plans to ensure that fuel accumulations are addressed Information is available from DOI and USDA Forest Service on the ecological role of fire and on smoke management programs and basic smoke management practices.[254]

If this is the first time that transportation conformity will apply in a state, such a state is required by the statute and EPA regulations to submit a SIP revision that addresses three specific transportation conformity requirements that address consultation procedures and written commitments to control or mitigation measures associated with conformity determinations for

[254] USDA Forest Service and Natural Resources Conservation Service, Basic Smoke Management Practices Tech Note, October 2011, http://www.nrcs.usda.gov/Internet/FSE_DOCUMENTS/stelprdb1046311.pdf.

transportation plans, TIPs or projects. (40 CFR 51.390) Additional information and guidance can be found in the EPA's "Guidance for Developing Transportation Conformity State Implementation Plans" (http://www.epa.gov/otaq/stateresources/transconf/policy/420b09001.pdf).

E. Regional and International Pollution Transport

1. Interstate Transport

The CAA contains provisions that specifically address and require regulation of the interstate transport of air pollution that does not otherwise qualify for data exclusion under the Act's exceptional events provisions. As previously noted, emissions from events, such as wildfires, may qualify as exceptional events and may be transported across jurisdictional boundaries. The EPA intends to address the transport of event-related emissions in our upcoming proposed revisions to the Exceptional Events Rule and draft guidance document addressing the Exceptional Events Rule criteria for wildfires that could affect O_3 concentrations. The EPA encourages affected air agencies to coordinate with their EPA regional office to identify approaches to evaluate the potential impacts of transported event-related emissions and determine the most appropriate information and analytical methods for each area's unique situation.

CAA section 110(a)(2)(D)(i)(I), Interstate Transport - CAA section 110(a)(2)(D)(i)(I) requires states to develop and implement a SIP to address the interstate transport of emissions. Specifically, this provision requires the SIP to prohibit "any source or other type of emissions activity within the state" that would "significantly contribute to nonattainment" of any NAAQS in another state, or that would "interfere with maintenance" of any NAAQS in another state. When EPA promulgates or revises a NAAQS, each state is required to submit a SIP addressing

this interstate transport provision within 3 years.

CAA section 126, Interstate Transport - CAA section 126(b) provides states and political subdivisions with a mechanism to petition the Administrator for a finding that "any major source or group of stationary sources emits or would emit any air pollution in violation of the prohibition of [CAA section 110(a)(2)(D)(i)(I)]."[255] Where the EPA makes such finding, the source is allowed to operate beyond a 3-month period after such finding only if the EPA establishes emissions limitations and a compliance schedule designated to bring the source into compliance as expeditiously as practicable, but no later than three years after such finding. This mechanism is available to downwind states and political subdivisions, regardless of designation status, that would be affected by emissions from upwind states.

2. International Transport

The agency is active in work to reduce the international transport of O_3 and other pollutants that can contribute to "background" O_3 levels in the U.S. Under the Convention on Long-Range Transboundary Air Pollution (LRTAP) of the United Nations Economic Commission for Europe, the U.S. has been a party to the Protocol to Abate Acidification, Eutrophication, and Ground-level Ozone (known as the Gothenburg Protocol) since 2005. The U.S. is also active in the LRTAP Task Force for Hemispheric Transport of Air Pollution. The U.S. has worked bilaterally with Canada under the US-Canada Air Quality Agreement to adopt an Ozone Annex to address transboundary O_3 impacts and continues to work with China on air quality management activities. This work includes supporting China's efforts to rapidly deploy

[255] The text of section 126 codified in the United States Code cross references section 110(a)(2)(D)(ii) instead of section 110(a)(2)(D)(i). The courts have confirmed that this is a scrivener's error and the correct cross reference is to section 110(a)(2)(D)(i), See *Appalachian Power Co. v. EPA*, 249 F.3d 1032, 1040–44 (D.C. Cir. 2001).

power plant pollution controls that can achieve NO_X reductions of at least 80 to 90%. The U.S. also continues to work bilaterally with Mexico on the Border 2020 program to support efforts to improve environmental conditions in the border region. One of the main goals of the program is to reduce air pollution, including emissions that can cause transboundary O_3 impacts.

Clean Air Act section 179B recognizes the possibility that certain nonattainment areas may be impacted by O_3 or O_3 precursor emissions from international sources beyond the regulatory jurisdiction of the state. The EPA's science review suggests that the influence of international sources on U.S. O_3 levels will be largest in locations that are in the immediate vicinity of an international border with Canada or Mexico. The science review also cites two recent studies which indicate that intercontinental transport of pollution, along with other natural sources and local pollutant sources, can affect O_3 air quality in the western U.S. under specific conditions. (U.S. EPA 2013, p. 3-140). Section 179B allows states to consider in their attainment plans and demonstrations whether an area might meet the O_3 NAAQS by the attainment date "but for" emissions contributing to the area originating outside the U.S. If a state is unable to demonstrate attainment of the NAAQS in such an area impacted by international transport after adopting all reasonably available control measures (e.g., RACM, including RACT, as required by CAA section 182(b)), the EPA can nonetheless approve the CAA-required state attainment plan and demonstration using the authority in section 179B.

When the EPA approves this type of attainment plan and demonstration, and there would be no adverse consequence for a finding that the area failed to attain the NAAQS by the relevant attainment date. States can also avoid potential sanctions and FIPs that would otherwise apply for failure to submit a required SIP submission or failure to submit an approvable SIP submission. For example, section 179B explicitly provides that the area shall not be reclassified

to the next highest classification or required to implement a section 185 penalty fee program if a state meets the applicable criteria.

Section 179B authority does not allow an area to avoid a nonattainment designation or for the area to be classified with a lower classification than is indicated by actual ambient air quality. Section 179B also does not provide for any relaxation of mandatory emissions control measures (including contingency measures) or the prescribed emissions reductions necessary to achieve periodic emissions reduction progress requirements. In this way, section 179B insures that states will take actions to mitigate the public health impacts of exposure to ambient levels of pollution that violate the NAAQS by imposing reasonable control measures on the sources that *are* within the jurisdiction of the state while also authorizing EPA to approve such attainment plans and demonstrations even though they do not fully address the public health impacts of international transport. Also, generally, monitoring data influenced by international transport may not be excluded from regulatory determinations. However, depending on the nature and scope of international emissions events affecting air quality in the U.S., the event-influenced data may qualify for exclusion under the Exceptional Events Rule. The EPA encourages affected air agencies to coordinate with their EPA regional office to identify approaches to evaluate the potential impacts of international transport and to determine the most appropriate information and analytical methods for each area's unique situation. The EPA will also work with states that are developing attainment plans for which section 179B is relevant, and ensure the states have the benefit of the EPA's understanding of international transport of ozone and ozone precursors.

The EPA has used section 179B authority previously to approve attainment plans for Mexican border areas in El Paso, TX (O_3, PM_{10}, and CO plans); and Nogales, AZ (PM_{10} plan). The 24-hour PM_{10} attainment plan for Nogales, AZ, was approved by EPA as sufficient to

demonstrate attainment of the NAAQS by the Moderate classification deadline, but for international emissions sources in the Nogales Municipality, Mexico area (77 FR 38400, June 27, 2012).

States are encouraged to consult with their EPA Regional Office to establish appropriate technical requirements for these analyses.

IX. Statutory and Executive Order Reviews

Additional information about these statutes and Executive Orders can be found at http://www2.epa.gov/laws-regulations/laws-and-executive-orders.

A. Executive Order 12866: Regulatory Planning and Review and Executive Order 13563: Improving Regulation and Regulatory Review

This action is an economically significant regulatory action that was submitted to the Office of Management and Budget (OMB) for review. Any changes made in response to OMB recommendations have been documented in the docket. The EPA prepared an analysis of the potential costs and benefits associated with this action. This analysis is contained in the document, *Regulatory Impact Analysis of the Final National Ambient Air Quality Standards for Ground-Level Ozone*, October 2015. A copy of the analysis is available in the RIA docket (EPA-HQ-OAR-2013-0169) and the analysis is briefly summarized here. The RIA estimates the costs and monetized human health and welfare benefits of attaining three alternative O_3 NAAQS nationwide. Specifically, the RIA examines the alternatives of 65 ppb and 70 ppb. The RIA contains illustrative analyses that consider a limited number of emissions control scenarios that states and Regional Planning Organizations might implement to achieve these alternative O_3 NAAQS. However, the CAA and judicial decisions make clear that the economic and technical feasibility of attaining ambient standards are not to be considered in setting or revising NAAQS,

although such factors may be considered in the development of state plans to implement the standards. Accordingly, although an RIA has been prepared, the results of the RIA have not been considered in issuing this final rule.

B. Paperwork Reduction Act

The information collection requirements in this final rule have been submitted for approval to the Office of Management and Budget (OMB) under the Paperwork Reduction Act (PRA). The information collection requirements are not enforceable until OMB approves them. The Information Collection Request (ICR) document prepared by the EPA for these revisions has been assigned EPA ICR #2313.04.

The information collected and reported under 40 CFR part 58 is needed to determine compliance with the NAAQS, to characterize air quality and associated health and ecosystems impacts, to develop emission control strategies, and to measure progress for the air pollution program. We are extending the length of the required O_3 monitoring season in 32 states and the District of Columbia and the revised O_3 monitoring seasons will become effective on January 1, 2017. We are also revising the PAMS monitoring requirements to reduce the number of required PAMS sites while improving spatial coverage, and requiring states in moderate or above O_3 non-attainment areas and the O_3 transport region to develop an enhanced monitoring plan as part of the PAMS requirements. Monitoring agencies will need to comply with the PAMS requirements by June 1, 2019. In addition, we are revising the O_3 FRM to establish a new, additional technique for measuring O_3 in the ambient air. It will be incorporated into the existing O_3 FRM, using the same calibration procedure in Appendix D of 40 CFR part 50. We are also making changes to the procedures for testing performance characteristics and determining comparability between candidate FEMs and reference methods.

For the purposes of ICR number 2313.04, the burden figures represent the burden estimate based on the requirements contained in this rule. The burden estimates are for the 3-year period from 2016 through 2018. The implementation of the PAMS changes will occur beyond the time frame of this ICR with implementation occurring in 2019. The cost estimates for the PAMS network (including revisions) will be captured in future routine updates to the Ambient Air Quality Surveillance ICR that are required every 3 years by OMB. The addition of a new FRM in 40 CFR part 50 and revisions to the O_3 FEM procedures for testing performance characteristics in 40 CFR part 53 does not add any additional information collection requirements.

The ICR burden estimates are associated with the changes to the O_3 seasons in this final rule. This information collection is estimated to involve 158 respondents for a total cost of approximately $24,597,485 (total capital, labor, and operation and maintenance) plus a total burden of 339,930 hours for the support of all operational aspects of the entire O_3 monitoring network. The labor costs associated with these hours are $20,209,966. Also included in the total are other costs of operations and maintenance of $2,254,334 and equipment and contract costs of $2,133,185. The actual labor cost increase to expand the O_3 monitoring seasons is $2,064,707. In addition to the costs at the state, local, and tribal air quality management agencies, there is a burden to EPA of 41,418 hours and $2,670,360. Burden is defined at 5 CFR 1320.3(b). State, local, and tribal entities are eligible for state assistance grants provided by the federal government under the CAA which can be used for related activities. An agency may not conduct or sponsor, and a person is not required to respond to, a collection of information unless it displays a currently valid OMB control number. The OMB control numbers for EPA's regulations in 40 CFR are listed in 40 CFR part 9.

C. Regulatory Flexibility Act (RFA)

I certify that this action will not have a significant economic impact on a substantial number of small entities under the RFA. This action will not impose any requirements on small entities. Rather, this rule establishes national standards for allowable concentrations of O_3 in ambient air as required by section 109 of the CAA. See also *American Trucking Associations v. EPA*, 175 F. 3d at 1044-45 (NAAQS do not have significant impacts upon small entities because NAAQS themselves impose no regulations upon small entities). Similarly, the revisions to 40 CFR part 58 address the requirements for states to collect information and report compliance with the NAAQS and will not impose any requirements on small entities. Similarly, the addition of a new FRM in 40 CFR part 50 and revisions to the FEM procedures for testing in 40 CFR part 53 will not impose any requirements on small entities.

D. Unfunded Mandates Reform Act (UMRA)

This action does not contain an unfunded federal mandate of $100 million or more as described in UMRA, 2 U. S. C. 1531 – 1538, and does not significantly or uniquely affect small governments. The revisions to the O_3 NAAQS impose no enforceable duty on any state, local, or tribal governments or the private sector beyond those duties already established in the CAA. The expected costs associated with the monitoring requirements are described in the EPA's ICR document, and these costs are not expected to exceed $100 million in the aggregate for any year.

Furthermore, as indicated previously, in setting NAAQS the EPA cannot consider the economic or technological feasibility of attaining ambient air quality standards, although such factors may be considered to a degree in the development of state plans to implement the standards (see *American Trucking Associations v. EPA*, 175 F. 3d at 1043 [noting that because the EPA is precluded from considering costs of implementation in establishing NAAQS,

preparation of a RIA pursuant to the UMRA would not furnish any information which the court could consider in reviewing the NAAQS]). With regard to the sections of the rule preamble discussing implementation of the revisions to the O_3 NAAQS, the CAA imposes the obligation for states to submit SIPs to implement the NAAQS for O_3. To the extent the EPA's discussion of implementation topics in this final rule may reflect some interpretations of those requirements, those interpretations do not impose obligations beyond the duties already established in the CAA and thus do not constitute a federal mandate for purposes of UMRA. The EPA is also adopting a grandfathering provision for certain PSD permits in this action, as described above. However, that provision does not impose any mandate on any state, local, or tribal government or the private sector, but rather provides relief from requirements that would otherwise result from the new standards. In addition, the EPA is not requiring states to revise their SIPs to include such a provision.

E. Executive Order 13132: Federalism

This action does not have federalism implications. It will not have substantial direct effects on the states, on the relationship between the national government and the states, or on the distribution of power and responsibilities among the various levels of government.

F. Executive Order 13175: Consultation and Coordination with Indian Tribal Governments

This action does not have tribal implications as specified in Executive Order 13175. It does not have a substantial direct effect on one or more Indian tribes. This rule provides increased protection from adverse effects of ozone for the entire country, including for sensitive populations, and tribes are not obligated to adopt or implement any NAAQS. In addition, tribes are not obligated to conduct ambient monitoring for O_3 or to adopt the ambient monitoring requirements of 40 CFR part 58. Even if this action were determined to have tribal implications

within the meaning of Executive Order 13175, it will neither impose substantial direct compliance costs on tribal governments, nor preempt tribal law. Thus, consultation under Executive Order 13175 was not required.

Nonetheless, consistent with the "EPA Policy on Consultation and Coordination with Indian Tribes", the EPA offered government-to-government consultation on the proposed rule. No tribe requested government-to-government consultation with the EPA on this rule. In addition, the EPA conducted outreach to tribal environmental professionals, which included participation in the Tribal Air call sponsored by the National Tribal Air Association, and two other calls available to tribal environmental professionals. During the public comment period we received comments on the proposed rule from seven tribes and three tribal organizations.

G. Executive Order 13045: Protection of Children from Environmental Health & Safety Risks

This action is subject to Executive Order 13045 because it is an economically significant regulatory action as defined by Executive Order 12866, and the EPA believes that the environmental health risk addressed by this action may have a disproportionate effect on children. The rule will establish uniform NAAQS for O_3; these standards are designed to protect public health with an adequate margin of safety, as required by CAA section 109. However, the protection offered by these standards may be especially important for children because children, especially children with asthma, along with other at-risk populations[256] such as all people with lung disease and people active outdoors, are at increased risk for health effects associated with exposure to O_3 in ambient air. Because children are considered an at-risk lifestage, we have carefully evaluated the environmental health effects of exposure to O_3 pollution among children.

[256] As used here and similarly throughout this document, the term population refers to people having a quality or characteristic in common, including a specific pre-existing illness or a specific age or lifestage.

Discussions of the results of the evaluation of the scientific evidence, policy considerations, and the exposure and risk assessments pertaining to children are contained in sections II.B and II.C of this preamble.

H. Executive Order 13211: Actions that Significantly Affect Energy Supply, Distribution, or Use

This action is not a "significant energy action" because it is not likely to have a significant adverse effect on the supply, distribution, or use of energy. The purpose of this rule is to establish revised NAAQS for O_3, establish an additional FRM, revise FEM procedures for testing, and revises air quality surveillance requirements. The rule does not prescribe specific pollution control strategies by which these ambient standards and monitoring revisions will be met. Such strategies will be developed by states on a case-by-case basis, and the EPA cannot predict whether the control options selected by states will include regulations on energy suppliers, distributors, or users. Thus, the EPA concludes that this rule is not likely to have any adverse energy effects and does not constitute a significant energy action as defined in Executive Order 13211.

I. National Technology Transfer and Advancement Act

This rulemaking involves environmental monitoring and measurement. Consistent with the Agency's Performance Based Measurement System (PBMS), the EPA is not requiring the use of specific, prescribed analytical methods. Rather, the Agency is allowing the use of any method that meets the prescribed performance criteria. Ambient air concentrations of O_3 are currently measured by the FRM in 40 CFR part 50, Appendix D (Measurement Principle and Calibration Procedure for the Measurement of Ozone in the Atmosphere) or by FEM that meet the requirements of 40 CFR part 53. Procedures are available in part 53 that allow for the approval of an FEM for O_3 that is similar to the FRM. Any method that meets the performance

criteria for a candidate equivalent method may be approved for use as an FEM. This approach is consistent with EPA's PBMS. The PBMS approach is intended to be more flexible and cost-effective for the regulated community; it is also intended to encourage innovation in analytical technology and improved data quality. The EPA is not precluding the use of any method, whether it constitutes a voluntary consensus standard or not, as long as it meets the specified performance criteria.

J. Executive Order 12898: Federal Actions to Address Environmental Justice in Minority Populations and Low-Income Populations

The EPA believes that this action will not have disproportionately high and adverse human health or environmental effects on minority populations, low-income populations or indigenous peoples. The action described in this notice is to strengthen the NAAQS for O_3.

The primary NAAQS are established at a level that is requisite to protect public health, including the health of sensitive or at-risk groups, with an adequate margin of safety. The NAAQS decisions are based on an explicit and comprehensive assessment of the current scientific evidence and associated exposure/risk analyses. More specifically, EPA expressly considers the available information regarding health effects among at-risk populations, including that available for low-income populations and minority populations, in decisions on NAAQS. Where low-income populations or minority populations are among the at-risk populations, the decision on the standard is based on providing protection for these and other at-risk populations and lifestages. Where such populations are not identified as at-risk populations, a NAAQS that is established to provide protection to the at-risk populations would also be expected to provide protection to all other populations, including low-income populations and minority populations.

The ISA, HREA, and PA for this review, which include identification of populations at

risk from O_3 health effects, are available in the docket, EPA-HQ-OAR-2008-0699. The information on at-risk populations for this NAAQS review is summarized and considered earlier in this preamble (see section II.A). This final rule increases the level of environmental protection for all affected populations without having any disproportionately high and adverse human health or environmental effects on any population, including any minority populations, low-income populations or indigenous peoples. This rule establishes uniform national standards for O_3 in ambient air that, in the Administrator's judgment, protect public health, including the health of sensitive groups, with an adequate margin of safety.

Although it is part of a separate docket (EPA-HQ-OAR-2013-0169) and is not part of the rulemaking record for this action, EPA has prepared a RIA of this decision. As part of the RIA, a demographic analysis was conducted. While, as noted in the RIA, the demographic analysis is not a full quantitative, site-specific exposure and risk assessment, that analysis examined demographic characteristics of persons living in areas with poor air quality relative to the proposed standard. Specifically, Chapter 9, section 9.10 (page 9-7) and Appendix 9A of the RIA describe this proximity and socio-demographic analysis. This analysis found that in areas with poor air quality relative to the revised standard,[257] the representation of minority populations was slightly greater than in the U.S. as a whole. Because the air quality in these areas does not currently meet the revised standard, populations in these areas would be expected to benefit from implementation of the strengthened standard, and, thus, would be more affected by strategies to attain the revised standard. This analysis, which evaluates the potential implications for minority populations and low-income populations of future air pollution control actions that state and

[257] This refers to monitored areas with O_3 design values above the revised and alternative standards.

local agencies may consider in implementing the revised O_3 NAAQS described in this decision notice are discussed in Appendix 9A of the RIA. The RIA is available on the Web, through the EPA's Technology Transfer Network website at http://www.epa.gov/ttn/naaqs/standards/ozone/s_o3_index.html and in the RIA docket (EPA-HQ-OAR-2013-0169). As noted above, although an RIA has been prepared, the results of the RIA have not been considered in issuing this final rule.

K. Congressional Review Act (CRA)

This action is subject to the CRA, and the EPA will submit a rule report to each House of the Congress and to the Comptroller General of the United States. This action is a "major rule" as defined by 5 U.S.C. 804(2).

References

Adams, WC. (2006). Comparison of chamber 6.6 hour exposures to 0.04-0.08 ppm ozone via square-wave and triangular profiles on pulmonary responses. Inhalation Toxicol. 18: 127-136. http://dx.doi.org/10.1080/08958370500306107.

Adams, WC. (2002). Comparison of chamber and face-mask 6.6-hour exposures to ozone on pulmonary function and symptoms responses. Inhal Toxicol 14: 745-764. http://dx.doi.org/10.1080/08958370290084610.

Akinbami, LJ; Lynch, CD; Parker, JD; Woodruff, TJ. (2010). The association between childhood asthma prevalence and monitored air pollutants in metropolitan areas, United States, 2001-2004. Environ Res 110: 294-301. http://dx.doi.org/10.1016/j.envres.2010.01.001.

Alexis, N; Urch, B; Tarlo, S; Corey, P; Pengelly, D; O'Byrne, P; Silverman, F. (2000). Cyclooxygenase metabolites play a different role in ozone-induced pulmonary function decline in asthmatics compared to normals. Inhal Toxicol 12: 1205-1224.

American Thoracic Society. (2000a). What constitutes an adverse health effect of air pollution? Am. J. Respir. Crit. Care Med. 161: 665-673.

American Thoracic Society. (2000b). Guidelines for methacholine and exercise challenge testing – 1999. Am. J. Respir. Crit. Care Med. 161: 309-329.

American Thoracic Society. (1985). Guidelines as to what constitutes an adverse respiratory health effect, with special reference to epidemiological studies of air pollution. Am. Rev. Respir. Dis. 131: 666-668.

Andersen, CP; Wilson, R; Plocher, M; Hogsett, WE. (1997). Carry-over effects of ozone on root growth and carbohydrate concentrations of ponderosa pine seedlings. Tree Physiol 17: 805-811.

Basha, MA; Gross, KB; Gwizdala, CJ; Haidar, AH; Popovich, J, Jr. (1994). Bronchoalveolar lavage neutrophilia in asthmatic and healthy volunteers after controlled exposure to ozone and filtered purified air. Chest 106: 1757-1765.

Bell, ML; Peng, RD; Dominici, F. (2006). The exposure-response curve for ozone and risk of mortality and the adequacy of current ozone regulations. Environ Health Perspect 114: 532-536.

Bloom, B; Cohen, RA; Freeman, G. (2011). Summary health statistics for U.S. children: National Health Interview Survey, 2010. National Center for Health Statistics. Vital Health Stat 10 (250). http://www.cdc.gov/nchs/data/series/sr_10/sr10_250.pdf.

Brauer, M; Blair, J; Vedal, S. (1996). Effect of ambient ozone exposure on lung function in farm workers. Am J Respir Crit Care Med 154: 981-987.

Brown, JS; Bateson, TF; McDonnell, WF. (2008). Effects of exposure to 0.06 ppm ozone on FEV_1 in humans: A secondary analysis of existing data. Environ Health Perspect 116: 1023-1026. http://dx.doi.org/10.1289/ehp.11396.

Brown, JS. (2007). The effects of ozone on lung function at 0.06 ppm in healthy adults. June 14, 2007. Memo to the Ozone NAAQS Review Docket. EPA-HQ-OAR-2005-0172-0175. http://www.epa.gov/ttn/naaqs/standards/ozone/s_o3_cr_td.html

Brunekreef, B; Hoek, G; Breugelmans, O; Leentvaar, M. (1994). Respiratory effects of low-level photochemical air pollution in amateur cyclists. Am J Respir Crit Care Med 150: 962-966.

Cakmak, S; Dales, RE; Judek, S. (2006). Respiratory health effects of air pollution gases: Modification by education and income. Arch Environ Occup Health 61: 5-10. http://dx.doi.org/10.3200/AEOH.61.1.5-10.

Campbell, SJ; Wanek, R; Coulston, JW. (2007). Ozone injury in west coast forests: 6 years of monitoring - Introduction. Portland, OR: U.S. Department of Agriculture.

Cavender, K. (2015). Summary of Final PAMS Network Design. Memorandum to the Ozone NAAQS Review Docket, EPA-HQ-OAR-2008-0699.

Cavender, K. (2014). Network Design Considerations for the PAMS Network: Memorandum to the Ozone NAAQS Review Docket, EPA-HQ-OAR-2008-0699.

Cavender, K. (2013). Revisions to the PAMS Compound Target List: Memorandum to the Ozone NAAQS Review Docket, EPA-HQ-OAR-2008-0699.

Centers for Disease Control and Prevention. (2004). The health consequences of smoking: A report of the Surgeon General. Washington, DC: U.S. Department of Health and Human Services. http://www.surgeongeneral.gov/library/smokingconsequences/

Cordell, HK; Betz, CJ; Fly, M; Mou, S; Green, GT. (2008) How do Americans View Wilderness. A WILDERNESS Research Report in the Internet Research Information Series. National Survey on Recreation and the Environment. This research is a collaborative effort between the U.S. Department of Agriculture Forest Service's Southern Research Station and its Forestry Sciences Laboratory in Athens, Georgia; the University of Georgia in Athens; and the University of Tennessee in Knoxville, Tennessee. http://warnell.forestry.uga.edu/nrrt/nsre/IRISWild/IrisWild1rptR.pdf.

Dales, RE; Cakmak, S; Doiron, MS. (2006). Gaseous air pollutants and hospitalization for respiratory disease in the neonatal period. Environ Health Perspect 114: 1751-1754. http://dx.doi.org/10.1289/ehp.9044.

Darbah, JNT; Kubiske, ME; Nelson, N; Oksanen, E; Vaapavuori, E; Karnosky, DF. (2008). Effects of decadal exposure to interacting elevated CO2 and/or O-3 on paper birch (Betula papyrifera) reproduction. Environ Pollut 155: 446-452. http://dx.doi.org/10.1016/j.envpol.2008.01.033.

Darbah, JNT; Kubiske, ME; Nelson, N; Oksanen, E; Vaapavuori, E; Karnosky, DF. (2007). Impacts of elevated atmospheric CO2 and O3 on paper birch (Betula papyrifera): Reproductive fitness. ScientificWorldJournal 7: 240-246. http://dx.doi.org/10.1100/tsw.2007.42.

Darrow, LA; Klein, M; Sarnat, JA; Mulholland, JA; Strickland, MJ; Sarnat, SE; Russell, AG; Tolbert, PE. (2011a). The use of alternative pollutant metrics in time-series studies of ambient air pollution and respiratory emergency department visits. J Expo Sci Environ Epidemiol 21: 10-19. http://dx.doi.org/10.1038/jes.2009.49.

Eresmaa, N, Karppinen, SM; Joffre, SM; Rasanene, J; Talvitie, H. (2006). Mixing Height Determination by Ceilometer, Atmospheric Chemistry and Physics, 6. 1485-1493.

Franze, T; Weller, MG; Niessner, R; Pöschl, U. (2005). Protein nitration by polluted air. Environ Sci Technol 39: 1673-1678. http://dx.doi.org/10.1021/es0488737.

Frey, HC; Samet, JM. (2012a). Letter from Dr. H. Christopher Frey, Chair and Dr. Jonathan M. Samet, Immediate Past Chair, Clean Air Scientific Advisory Committee, to Administrator Lisa P. Jackson. Re: CASAC Review of the EPA's Policy Assessment for the Review of the Ozone National Ambient Air Quality Standards (First External Review Draft – August 2012). EPA-CASAC-13-003. November 26, 2012.

Frey, HC; Samet, JM. (2012b). Letter from Dr. H. Christopher Frey, Chair and Dr. Jonathan M. Samet, Immediate Past Chair, Clean Air Scientific Advisory Committee, to Administrator Lisa P. Jackson. Re: CASAC Review of the EPA's Health Risk and Exposure Assessment for Ozone (First External Review Draft - Updated August 2012) and Welfare

Risk and Exposure Assessment for Ozone (First External Review Draft - Updated August 2012). EPA-CASAC-13-002. November 19, 2012.

Frey, HC. (2014a). Letter from Dr. H. Christopher Frey, Chair, Clean Air Scientific Advisory Committee, to Administrator Gina McCarthy. Re: CASAC Review of the EPA's *Health Risk and Exposure Assessment for Ozone (Second External Review Draft – February, 2014)*. EPA-CASAC-14-005. July 1, 2014.

Frey, HC. (2014b). Letter from Dr. H. Christopher Frey, Chair, Clean Air Scientific Advisory Committee, to Administrator Gina McCarthy. CASAC Review of the EPA's *Welfare Risk and Exposure Assessment for Ozone (Second External Review Draft)*. EPA-CASAC-14-003. June 18, 2104.

Frey, HC. (2014c). Letter from Dr. H. Christopher Frey, Chair, Clean Air Scientific Advisory Committee, to Administrator Gina McCarthy. CASAC Review of the EPA's *Second Draft Policy Assessment for the Review of the Ozone National Ambient Air Quality Standards*. EPA-CASAC-14-004. June, 26, 2014.

Gielen, MH; Van Der Zee, SC; Van Wijnen, JH; Van Steen, CJ; Brunekreef, B. (1997). Acute effects of summer air pollution on respiratory health of asthmatic children. Am J Respir Crit Care Med 155: 2105-2108.

Goodman, JE; Prueitt, RL; Sax, SN; Bailey, LI; Rhomberg, LR. (2013). Evaluation of the causal framework used for setting the National Ambient Air Quality Standards, Crit. Rev. Toxicol. 43(10):829-849.

Heck, WW; Cowling, EB. (1997).The need for a long term cumulative secondary ozone standard - An ecological perspective. EM January: 23-33.

Henderson, R. (2008). Letter from Dr. Rogene Henderson, Chair, Clean Air Scientific Advisory Committee, to Administrator Stephen Johnson. Subject: Clean Air Scientific Advisory Committee Recommendations Concerning the Final Rule for the National Ambient Air Quality Standards for Ozone. EPA-CASAC-08-009. April 7, 2008.

Henderson, R. (2006). Letter from Dr. Rogene Henderson, Chair, Clean Air Scientific Advisory Committee, to Administrator Stephen Johnson. Subject: Clean Air Scientific Advisory Committee's (CASAC) Peer Review of the Agency's 2nd Draft Ozone Staff Paper. EPA-CASAC-07-001. October 24, 2006.

Hill, AB. (1965). The environment and disease: Association or causation? Proc R Soc Med 58: 295-300.

Hoek, G; Brunekreef, B; Kosterink, P; Van den Berg, R; Hofschreuder, P. (1993). Effect of ambient ozone on peak expiratory flow of exercising children in the Netherlands. Arch Environ Occup Health 48: 27-32. http://dx.doi.org/10.1080/00039896.1993.9938390

Holmes, T; Kramer, R. (1995). “An Independent Sample Test of Yea-Saying and StartingPoint Bias in Dichotomous-Choice Contingent Valuation.” Journal of Environmental Economics and Management 28:121-132.

Hoppe, P; Peters, A; Rabe, G; Praml, G; Lindner, J; Jakobi, G; Fruhmann, G; Nowak, D. (2003). Environmental ozone effects in different population subgroups. Int J Hyg Environ Health 206: 505-516. http://dx.doi.org/10.1078/1438-4639-00250.

Horstman, DH; Ball, BA; Brown, J; Gerrity, T; Folinsbee, LJ. (1995). Comparison of pulmonary responses of asthmatic and nonasthmatic subjects performing light exercise while exposed to a low level of ozone. Toxicol Ind Health 11: 369-385.

Howden, LM; Meyer, JA. (2011). U.S. Census Bureau, 2010 Census Briefs, C2010BR-03, Age and Sex Composition: 2010, U.S. Department of Commerce, Economics and Statistics Administration, U.S. Census Bureau, Washington, DC 20233. http://www.census.gov/prod/cen2010/briefs/c2010br-03.pdf.

Hwang, BF; Lee, YL; Lin, YC; Jaakkola, JJK; Guo, YL. (2005). Traffic related air pollution as a determinant of asthma among Taiwanese school children. Thorax 60: 467-473.

Islam, T; McConnell, R; Gauderman, WJ; Avol, E; Peters, JM; Gilliland, FD. (2008). Ozone, oxidant defense genes and risk of asthma during adolescence. Am J Respir Crit Care Med 177: 388-395. http://dx.doi.org/10.1164/rccm.200706-863OC.

Jacob DJ; Winner DA. (2009). Effect of climate change on air quality. Atmos Environ 43:51-63.

Jerrett, M; Burnett, RT; Pope, CA, III; Ito, K; Thurston, G; Krewski, D; Shi, Y; Calle, E; Thun, M. (2009). Long-term ozone exposure and mortality. N Engl J Med 360: 1085-1095. http://dx.doi.org/10.1056/NEJMoa0803894.

Jorres, R; Nowak, D; Magnussen, H; Speckin, P; Koschyk, S. (1996). The effect of ozone exposure on allergen responsiveness in subjects with asthma or rhinitis. Am J Respir Crit Care Med 153: 56-64.

Katsouyanni, K; Samet, JM; Anderson, HR; Atkinson, R; Le Tertre, A; Medina, S; Samoli, E; Touloumi, G; Burnett, RT; Krewski, D; Ramsay, T; Dominici, F; Peng, RD; Schwartz, J; Zanobetti, A. (2009). Air pollution and health: A European and North American approach (APHENA). (Research Report 142). Boston, MA: Health Effects Institute. http://pubs.healtheffects.org/view.php?id=327.

Kim, CS; Alexis, NE; Rappold, AG; Kehrl, H; Hazucha, MJ; Lay, JC; Schmitt, MT; Case, M; Devlin, RB; Peden, DB; Diaz-Sanchez, D. (2011). Lung function and inflammatory responses in healthy young adults exposed to 0.06 ppm ozone for 6.6 hours. Am J Respir Crit Care Med 183: 1215-1221. http://dx.doi.org/10.1164/rccm.201011-1813OC.

King, JS; Kubiske, ME; Pregitzer, KS; Hendrey, GR; McDonald, EP; Giardina, CP; Quinn, VS; Karnosky, DF. (2005). Tropospheric O3 compromises net primary production in young stands of trembling aspen, paper birch and sugar maple in response to elevated

atmospheric CO2. New Phytol 168: 623-635. http://dx.doi.org/10.1111/j.1469-8137.2005.01557.x.

Kohut, R. (2007). Assessing the risk of foliar injury from ozone on vegetation in parks in the U.S. National Park Service's Vital Signs Network. Environ Pollut 149: 348-357.

Kreit, JW; Gross, KB; Moore, TB; Lorenzen, TJ; D'Arcy, J; Eschenbacher, WL. (1989). Ozone-induced changes in pulmonary function and bronchial responsiveness in asthmatics. J Appl Physiol 66: 217-222.

Kubiske, ME; Quinn, VS; Heilman, WE; McDonald, EP; Marquardt, PE; Teclaw, RM; Friend, AL; Karnoskey, DF. (2006). Interannual climatic variation mediates elevated CO_2 and O_3 effects on forest growth. Global Change Biol 12: 1054-1068. http://dx.doi.org/10.1111/j.1365-2486.2006.01152.x.

Kubiske, ME; Quinn, VS; Marquardt, PE; Karnosky, DF. (2007). Effects of elevated atmospheric CO_2 and/or O_3 on intra- and interspecific competitive ability of aspen. Plant Biol (Stuttg) 9: 342-355. http://dx.doi.org/10.1055/s-2006-924760.

Lee, EH; Hogsett, WE. (1996). Methodology for calculating inputs for ozone secondary standard benefits analysis: Part II. Research Triangle Park, NC: U.S. Environmental Protection Agency.

Lefohn, AS; Hazucha, MJ; Shadwick, D; Adams, WC. (2010). An alternative form and level of the human health ozone standard. Inhal Toxicol 22: 999-1011. http://dx.doi.org/10.3109/08958378.2010.505253.

Lefohn, AS; Jackson, W; Shadwick, DS; Knudsen, HP. (1997). Effect of surface ozone exposures on vegetation grown in the southern Appalachian Mountains: Identification of possible areas of concern. Atmos Environ 31: 1695-1708. http://dx.doi.org/10.1016/S1352-2310(96)00258-0.

Lin, S; Bell, EM; Liu, W; Walker, RJ; Kim, NK; Hwang, SA. (2008a). Ambient ozone concentration and hospital admissions due to childhood respiratory diseases in New York State, 1991-2001. Environ Res 108: 42-47. http://dx.doi.org/10.1016/j.envres.2008.06.007.

Lin, S; Liu, X; Le, LH; Hwang, SA. (2008b). Chronic exposure to ambient ozone and asthma hospital admissions among children. Environ Health Perspect 116: 1725-1730. http://dx.doi.org/10.1289/ehp.11184.

Mar, TF; Koenig, JQ. (2009). Relationship between visits to emergency departments for asthma and ozone exposure in greater Seattle, Washington. Ann Allergy Asthma Immunol 103: 474-479.

McCarthy, G. (2012). Letter from Gina McCarthy, Assistant Administrator, U.S. Environmental Protection Agency to Robert Ukeiley. January 4, 2012.

http://www.epa.gov/scram001/10thmodconf/review_material/Sierra_Club_Petition_OAR-11-002-1093.pdf.

McDonnell, WF; Stewart, PW; Smith, MV; Kim, CS; Schelegle, ES. (2012). Prediction of lung function response for populations exposed to a wide range of ozone conditions. Inhal Toxicol 24: 619-633.

McDonnell, WF; Chapman, RS; Horstman, DH; Leigh, MW; Abdul-Salaam, S. (1985). A comparison of the responses of children and adults to acute ozone exposure.

McLaughlin, SB; Nosal, M; Wullschleger, SD; Sun, G. (2007a). Interactive effects of ozone and climate on tree growth and water use in a southern Appalachian forest in the USA. New Phytol 174: 109-124. http://dx.doi.org/10.1111/j.1469-8137.2007.02018.x.

McLaughlin, SB; Wullschleger, SD; Sun, G; Nosal, M. (2007b). Interactive effects of ozone and climate on water use, soil moisture content and streamflow in a southern Appalachian forest in the USA. New Phytol 174: 125-136. http://dx.doi.org/10.1111/j.1469-8137.2007.01970.x.

Medina-Ramon, M; Zanobetti, A; Schwartz, J. (2006). The effect of ozone and PM10 on hospital admissions for pneumonia and chronic obstructive pulmonary disease: A national multicity study. Am J Epidemiol 163: 579-588. http://dx.doi.org/10.1093/aje/kwj078.

Mortimer, KM; Neas, LM; Dockery, DW; Redline, S; Tager, IB. (2002). The effect of air pollution on inner-city children with asthma. Eur Respir J 19: 699-705. http://dx.doi.org/10.1183/09031936.02.00247102.

Mudway, IS; Kelly, FJ. (2004). An investigation of inhaled ozone dose and the magnitude of airway inflammation in healthy adults. Am J Respir Crit Care Med 169: 1089-1095.

National Academy of Sciences. (1991). Rethinking the Ozone Problem in Urban and Regional Air Pollution, Committee on Tropospheric Ozone, National Resource Council, National Academy Press, Washington, D.C. 20001. ISBN: 0-309-56037-3.

National Institutes of Health, National Heart Lung and Blood Institute. (2007). Expert panel report 3: guidelines for the diagnosis and management of asthma. (07-4051). Bethesda, MD: National Institute of Health.

National Research Council. (2008). Estimating Mortality Risk Reduction and Economic Benefits from Controlling Ozone Air Pollution. Washington, DC: *The National Academies Press*.

Nicholich, M. (2007). Some additional statistical analyses of the FEV1 pulmonary response data from the W.C. Adams data (2006). Appendix A. In: ExxonMobil comments, Docket No. EPA-HQ-OAR-2005-0172, October 9, 2007.

Page, S. (2010). Memorandum from Stephen D. Page, Director, Office of Air Quality Planning & Standards, U.S. EPA, to Air Division Directors and Deputies, Regions I – X. Re:

Applicability of the Federal Prevention of Significant Deterioration Permit Requirements to New and Revised National Ambient Air Quality Standards. April 1, 2010.

Page, S. (2011). Memorandum from Stephen D. Page, Director, Office of Air Quality Planning and Standards, U.S. EPA, to Regional Air Directors, Regions I-X. Re: Guidance to Regions for Working with Tribes during the National Ambient Air Quality Standards (NAAQS) Designations Process. December 20, 2011. http://www.epa.gov/ttn/oarpg/t1/memoranda/20120117naaqsguidance.pdf.

Page, S. (2013). Memorandum from Stephen D. Page, Director, EPA Office of Air Quality Planning and Standards to Regional Air Directors, Regions I-X. Re: Guidance on Infrastructure State Implementation Plan (SIP) Elements under Clean Air Act Sections 110(a)(1) and 110(a)(2). September 13, 2013. http://www.epa.gov/oar/urbanair/sipstatus/infrastructure.html.

Phillips, SJ; Comus, PWA. (2000). Natural History of the Sonoran Desert. University of California Press, 628 pages.

Pope, CA, III; Burnett, RT; Thun, MJ; Calle, EE; Krewski, D; Ito, K; Thurston, GD. (2002). Lung cancer, cardiopulmonary mortality, and long-term exposure to fine particulate air pollution. JAMA 287: 1132-1141.

Rice, J. (2014). Ozone Monitoring Season Analysis. Memorandum to the Ozone NAAQS Review Docket, EPA-HQ-OAR-2008-0699.

Riikonen, J; Kets, K; Darbah, J; Oksanen, E; Sober, A; Vapaavuori, E; Kubiske, ME; Nelson, N; Karnosky, DF. (2008). Carbon gain and bud physiology in Populus tremuloides and Betula papyrifera grown under longterm exposure to elevated concentrations of CO2 and O3. Tree Physiol 28: 243-254. http://dx.doi.org/10.1093/treephys/28.2.243.

RTI International. (2014). Gas Chromatograph (GC) Evaluation Study: Laboratory Evaluation Phase Report. http://www.epa.gov/ttnamti1/files/ambient/pams/labevalreport.pdf

Ryerson, TB; Williams, EJ; Fehsenfeld, FC. (2000). An Efficient Photolysis System for Fast-Response NO2 Measurements, Journal of Geophysical Research, Volume 105, Issue D21.

Salam, MT; Islam, T; Gauderman, WJ; Gilliland, FD. (2009). Roles of arginase variants, atopy, and ozone in childhood asthma. J Allergy Clin Immunol 123: 596-602. http://dx.doi.org/10.1016/j.jaci.2008.12.020.

Samet, JM. (2011). Letter from Dr. Jonathan M. Samet, Chair, Clean Air Scientific Advisory Committee to Administrator Lisa P. Jackson. Re: Clean Air Scientific Advisory Committee (CASAC) Response to Charge Questions on the Reconsideration of the 2008 Ozone National Ambient Air Quality Standards. EPA-CASAC-11-004. March 30, 2011. http://yosemite.epa.gov/sab/sabproduct.nsf/0/F08BEB48C1139E2A8525785E006909AC/$File/EPA-CASAC-11-004-unsigned+.pdf.

Samet, JM. (2010). Letter from Dr. Jonathan M. Samet, Chair, Clean Air Scientific Advisory Committee to Administrator Lisa P. Jackson. Re: Review of EPA's Proposed Ozone National Ambient Air Quality Standard (Federal Register, Vol. 75, Nov. 11, January 19, 2010). EPA-CASAC-10-007. February 19, 2010. http://yosemite.epa.gov/sab/sabproduct.nsf/264cb1227d55e02c85257402007446a4/610BB57CFAC8A41C852576CF007076BD/$File/EPA-CASAC-10-007-unsigned.pdf.

Samet, JM; Bodurow, CC. (2008). Improving the presumptive disability decision-making process for veterans. In JM Samet; CC Bodurow (Eds.). Washington, DC: National Academies Press. http://www.nap.edu/openbook.php?record_id=11908

Samoli, E; Zanobetti, A; Schwartz, J; Atkinson, R; Le Tertre, A; Schindler, C; Pérez, L; Cadum, E; Pekkanen, J; Paldy, A; Touloumi, G; Katsouyanni, K. (2009). The temporal pattern of mortality responses to ambient ozone in the APHEA project. J Epidemiol Community Health 63: 960-966. http://dx.doi.org/10.1136/jech.2008.084012.

Sasser, E. (2014). Memorandum from Erika Sasser, Acting Director, Health and Environmental Impacts Division, Office of Air Quality Planing and Standards, U.S. EPA, to Holly Stallworth, Designated Federal Office, Clean Air Scientific Advisory Committee. Re: Request for Revised Ozone HREA Chapter 7 Appendix Tables. May 9, 2014. http://www.epa.gov/ttn/naaqs/standards/ozone/s_o3_2008_rea.html.

Scannell, C; Chen, L; Aris, RM; Tager, I; Christian, D; Ferrando, R; Welch, B; Kelly, T; Balmes, JR. (1996). Greater ozone-induced inflammatory responses in subjects with asthma. Am J Respir Crit Care Med 154: 24-29.

Schelegle, ES; Adams, WC; Walby, WF; Marion, MS. (2012). Modelling of individual subject ozone exposure response kinetics. Inhal Toxicol 24: 401-415. http://dx.doi.org/10.3109/08958378.2012.683891.

Schelegle, ES; Morales, CA; Walby, WF; Marion, S; Allen, RP. (2009). 6.6-hour inhalation of ozone concentrations from 60 to 87 parts per billion in healthy humans. Am J Respir Crit Care Med 180: 265-272. http://dx.doi.org/10.1164/rccm.200809-1484OC.

Schiller, JS; Lucas, JW; Ward, BW; Peregoy, JA. (2012). Summary health statistics for U.S. adults: National Health Interview Survey, 2010. National Center for Health Statistics. Vital Health Stat 10(252). http://www.cdc.gov/nchs/data/series/sr_10/sr10_252.pdf.

Silverman, RA; Ito, K. (2010). Age-related association of fine particles and ozone with severe acute asthma in New York City. J Allergy Clin Immunol 125: 367-373. http://dx.doi.org/10.1016/j.jaci.2009.10.061.

Smith, JT.; Murphy, DL. (2015). Additional Observations From WREA Datasets for Visible Foliar Injury. Memorandum to the Ozone NAAQS Review Docket, EPA-HQ-OAR-2008-0699.

Smith, G. (2012). Ambient ozone injury to forest plants in Northeast and North Central USA: 16 years of biomonitoring. Environ Monit Assess 184: 4049-4065. http://dx.doi.org/10.1007/s10661-011-2243-z.

Smith, RL; Xu, B; Switzer, P. (2009). Reassessing the relationship between ozone and short-term mortality in U.S. urban communities. Inhal Toxicol 21: 37-61. http://dx.doi.org/10.1080/08958370903161612.

Stafoggia, M; Forastiere, F; Faustini, A; Biggeri, A; Bisanti, L; Cadum, E; Cernigliaro, A; Mallone, S; Pandolfi, P; Serinelli, M; Tessari, R; Vigotti, MA; Perucci, CA. (2010). Susceptibility factors to ozone-related mortality: A population-based case-crossover analysis. Am J Respir Crit Care Med 182: 376-384. http://dx.doi.org/10.1164/rccm.200908-1269OC.

Stieb, DM; Szyszkowicz, M; Rowe, BH; Leech, JA. (2009). Air pollution and emergency department visits for cardiac and respiratory conditions: A multi-city time-series analysis. Environ Health Global Access Sci Source 8: 25. http://dx.doi.org/10.1186/1476-069X-8-25.

Strickland, MJ; Darrow, LA; Klein, M; Flanders, WD; Sarnat, JA; Waller, LA; Sarnat, SE; Mulholland, JA; Tolbert, PE. (2010). Short-term associations between ambient air pollutants and pediatric asthma emergency department visits. Am J Respir Crit Care Med 182: 307-316. http://dx.doi.org/10.1164/rccm.200908-1201OC.

Tolbert, PE; Klein, M; Peel, JL; Sarnat, SE; Sarnat, JA. (2007). Multipollutant modeling issues in a study of ambient air quality and emergency department visits in Atlanta. J Expo Sci Environ Epidemiol 17: S29-S35. http://dx.doi.org/10.1038/sj.jes.7500625.

Ulmer, C; Kopp, M; Ihorst, G; Frischer, T; Forster, J; Kuehr, J. (1997). Effects of ambient ozone exposures during the spring and summer of 1994 on pulmonary function of schoolchildren. Pediatr Pulmonol 23: 344- 353. http://dx.doi.org/10.1002/(SICI)1099-0496(199705)23:53.0.CO;2-K.

United Nations Environment Programme. (2003). Millennium Ecosystem Assessment: Ecosystems and human well-being: A framework for assessment. Washington, DC: Island Press.

U.S. Department of Agriculture, U.S. Forest Service (2014). Tree basal area data. http://www.fs.fed.us/foresthealth/technology/nidrm2012.shtml.

U.S. Department of Agriculture, National Resources Conservation Service (2014), The PLANTS Database (http://plants.usda.gov, 2014), National Plant Data Center, Baton Rouge, LA.

U.S. Department of Agriculture, Agricultural Research Service. (2012). Effects of Ozone Air Pollution on Plants. http://www.ars.usda.gov/Main/docs.htm?docid=12462.

U.S. Department of Health, Education, and Welfare. (1970). Air Quality Criteria for Photochemical Oxidants. Washington, D.C.: National Air Pollution Control

Administration; publication no. AP-63. Available from NTIS, Springfield, VA; PB-190262/BA.

U.S. Environmental Protection Agency. (2015) Climate Change in the United States: Benefits of Global Action. U.S. Environmental Protection Agency. Office of Atmospheric Programs. EPA 430-F-15-001, June 2015. Available at www.epa.gov/cira.

U.S. Environmental Protection Agency. (2014a). Health Risk and Exposure Assessment for Ozone. Office of Air Quality Planning and Standards, Research Triangle Park, NC. EPA-452/P-14-004a. http://www.epa.gov/ttn/naaqs/standards/ozone/s_o3_index.html.

U.S. Environmental Protection Agency. (2014b). Welfare Risk and Exposure Assessment for Ozone. Office of Air Quality Planning and Standards, Research Triangle Park, NC. EPA-452/P-14-005a. http://www.epa.gov/ttn/naaqs/standards/ozone/s_o3_index.html.

U.S. Environmental Protection Agency. (2014c). Policy Assessment for Ozone. Office of Air Quality Planning and Standards, Research Triangle Park, NC. EPA-452/R-14-006. http://www.epa.gov/ttn/naaqs/standards/ozone/s_o3_index.html.

U.S. Environmental Protection Agency. (2014d) Policy Assessment for Ozone, Second External Review Draft. Office of Air Quality Planning and Standards, Research Triangle Park, NC. EPA-452/P–14–002.

U.S. Environmental Protection Agency (2014e). List of Designated Reference and Equivalent Methods. U.S. Environmental Protection Agency, Office of Research and Development, Research Triangle Park, NC 27711. http://epa.gov/ttn/amtic/files/ambient/criteria/reference-equivalent-methods-list.pdf.

U.S. Environmental Protection Agency (2014f). Performance of the Proposed New Federal Reference Method for Measuring Ozone Concentrations in Ambient Air. U.S. Environmental Protection Agency, Office of Research and Development, Research Triangle Park, NC. EPA/600/R-14/432.

U.S. Environmental Protection Agency (2013). Integrated Science Assessment of Ozone and Related Photochemical Oxidants (Final Report). U.S. Environmental Protection Agency, Washington, DC. EPA/600/R-10/076F. http://www.epa.gov/ttn/naaqs/standards/ozone/s_o3_2008_isa.html.

U.S. Environmental Protection Agency (2012). Integrated Science Assessment of Ozone and Related Photochemical Oxidants (Third External Review Draft). U.S. Environmental Protection Agency, Washington, DC, EPA/600/R-10/076C, 2012.

U.S. Environmental Protection Agency (2011a). Integrated Review Plan for the Ozone National Ambient Air Quality Standards. U.S. Environmental Protection Agency, National Center for Environmental Assessment and Office of Air Quality Planning and Standards, Research Triangle Park, NC. EPA 452/R-11-006. April 2011. http://www.epa.gov/ttn/naaqs/standards/ozone/data/2011_04_OzoneIRP.pdf

U.S. Environmental Protection Agency (2011b) Integrated Science Assessment for Ozone and Related Photochemical Oxidants: First External Review Draft, U.S. Environmental Protection Agency, Washington, DC. EPA/600/R-10/076A.

U.S. Environmental Protection Agency (2011c). Integrated Science Assessment of Ozone and Related Photochemical Oxidants (Second External Review Draft). U.S. Environmental Protection Agency, Washington, DC. EPA/600/R-10/076B.

U.S. Environmental Protection Agency (2011d). Ozone National Ambient Air Quality Standards: Scope and Methods Plan for Health Risk and Exposure Assessment. U.S. Environmental Protection Agency, Office of Air Quality Planning and Standards, Research Triangle Park, NC. EPA-452/P-11-001. April 2011. http://www.epa.gov/ttn/naaqs/standards/ozone/s_o3_2008_pd.html.

U.S. Environmental Protection Agency (2011e). Ozone National Ambient Air Quality Standards: Scope and Methods Plan for Welfare Risk and Exposure Assessment. U.S. Environmental Protection Agency, Office of Air Quality Planning and Standards, Research Triangle Park, NC. EPA-452/P-11-002. April 2011. http://www.epa.gov/ttn/naaqs/standards/ozone/s_o3_2008_pd.html.

U.S. Environmental Protection Agency (2011f). Review of EPA's Photochemical Assessment Monitoring Stations (PAMS) Network Re-engineering Project. U.S. Environmental Protection Agency, Office of the Administrator, Science Advisory Board, Washington DC. EPA-CASAC-11-010.

U.S. Environmental Protection Agency (2010). Final Assessment: Integrated Science Assessment for Carbon Monoxide. U.S. Environmental Proteciton Agency, Washington, DC, EPA/600/R-09/019F.

U.S. Environmental Protection Agency (2009a). Assessment of the Impacts of Global Change on Regional U.S. Air Quality: A Synthesis of Climate Change Impacts on Ground Level-Ozone. An Interim Report of the U.S. EPA Global Change Research Program. U.S Environmental Protection Agency, Washington, DC. EPA/600/R–07/094.

U.S. Environmental Protection Agency (2009b). Integrated Science Assessment for Particulate Matter (Final Report). U.S. Environmental Protection Agency, Washington, DC, EPA/600/R-08/139F, 2009.

U.S. Environmental Protection Agency (2008). Responses to Significant Comments on the 2007 Proposed Rule on the National Ambient Air Quality Standards for Ozone. U.S. Environmental Protection Agency, Washington, DC, March 2008. http://www.epa.gov/ttn/naaqs/standards/ozone/data/2008_03_rtc.pdf

U.S. Environmental Protection Agency (2007). Review of the National Ambient Air Quality Standards for Ozone: Policy Assessment of Scientific and Technical Information, OAQPS Staff Paper. EPA-452/R-07-007.

U.S. Environmental Protection Agency (2006a). Air Quality Criteria for Ozone and Related Photochemical Oxidants (2006 Final). U.S. Environmental Protection Agency, Washington, DC. EPA/600/R-05/004aF-cF. March 2006. http://www.epa.gov/ttn/naaqs/standards/ozone/s_o3_cr_cd.html.

U.S. Environmental Protection Agency (2006b). Ecological Benefits Assessment Strategic Plan. EPA-240-R-06-001. Office of Administrator, Washington, DC. http://yosemite.epa.gov/ee/epa/eed.nsf/webpages/ecologbenefitsplan.html.

U.S. Environmental Protection Agency (2005). Guidelines for carcinogen risk assessment. Risk Assessment Forum, U.S. EPA, Washington, DC. EPA/630/P-03/001F. http://www.epa.gov/cancerguidelines/.

U.S. Environmental Protection Agency (1999). Compendium Method TO-11A, Determination of Formaldehyde in Ambient Air using Adsorbent Cartridge Followed by High Performance Liquid Chromatography (HPLC). U.S. Environmental Protection Agency, Office of Research and Development, Cincinnati, OH. EPA/625/R-96/010b.

U.S. Environmental Protection Agency (1998). Technical Assistance Document (TAD) for Sampling and Analysis of Ozone Precursors. U.S. Environmental Protection Agency, Office of Research and Development, Research Triangle Park. EPA/600-R-98/161.

U.S. Environmental Protection Agency (1996a). Air quality criteria for ozone and related photochemical oxidants. U.S. Environmental Protection Agency, Research Triangle Park, NC. EPA/600/P-93/004aF, cF

U.S. Environmental Protection Agency (1996b). Review of national ambient air quality standards for ozone: Assessment of scientific and technical information: OAQPS staff paper. Office of Air Quality Planning and Standards, Research Triangle Park, NC. EPA/452/R-96/007. http://www.ntis.gov/search/product.aspx?ABBR=PB96203435

U.S. Environmental Protection Agency (1992). Summary of selected new information on effects of ozone on health and vegetation: supplement to 1986 air quality criteria for ozone and other photochemical oxidants. Research Triangle Park, NC: Office of Health and Environmental Assessment, Environmental Criteria and Assessment Office; EPA report no. EPA/600/8-88/105F. Available from NTIS, Springfield, VA; PB92-235670.

U.S. Environmental Protection Agency (1989). Review of the National Ambient Air Quality Standards for Ozone: Policy Assessment of Scientific and Technical Information. OAQPS Staff Paper. Office of Air Quality Planning and Standards, Research Triangle Park, NC.

U.S. Environmental Protection Agency (1986). Air quality criteria for ozone and other photochemical oxidants. Research Triangle Park, NC. EPA-600/8-84-020aF - EPA-600/8-84-020eF. http://www.ntis.gov/search/product.aspx?ABBR=PB87142949.

U.S. Environmental Protection Agency (1978). Air quality criteria for ozone and other photochemical oxidants. Washington, DC. EPA/600/8-78/004.

U.S. Forest Service; National Park Service; U.S. Fish and Wildlife Service. (2010). Federal land managers' air quality related values work group (FLAG): phase I report—revised (2010). Natural Resource Report NPS/NRPC/NRR—2010/232. National Park Service, Denver, CO. http://www.nature.nps.gov/air/Pubs/pdf/flag/FLAG_2010.pdf.

U.S. National Park Service. (2003). Ozone Sensitive Plant Species on National Park Service and U.S. Fish and Wildlife Service Lands: Results of a June 24-25, 2003 Workshop. Baltimore, MD. http://www.nature.nps.gov/air/pubs/pdf/baltfinalreport1.pdf.

U.S. National Park Service. (2006). Ozone Sensitive Plant Species, by Park, November 2006. http://www.nature.nps.gov/air/Permits/ARIS/docs/Ozone_Sensitive_ByPark_3600.pdf.

Ulmer, C; Kopp, M; Ihorst, G; Frischer, T; Forster, J; Kuehr, J. (1997). Effects of ambient ozone exposures during the spring and summer of 1994 on pulmonary function of schoolchildren. Pediatr Pulmonol 23: 344-353. http://dx.doi.org/10.1002/(SICI)1099-0496(199705)23:5<344::AID-PPUL6>3.0.CO;2-K.

Vagaggini, B; Cianchetti, S; Bartoli, M; Ricci, M; Bacci, E; Dente, FL; Di Franco, A; Paggiaro, P. (2007). Prednisone blunts airway neutrophilic inflammatory response due to ozone exposure in asthmatic subjects. Respiration 74: 61-58. http://dx.doi.org/10.1159/000096078.

Vagaggini, B; Taccola, M; Conti, I; Carnevali, S; Cianchetti, S; Bartoli, ML; Bacci, E; Dente, FL; Di Franco, A; Giannini, D; Paggiaro, PL. (2001). Budesonide reduces neutrophilic but not functional airway response to ozone in mild asthmatics. Am J Respir Crit Care Med 164: 2172-2176.

Vedal, S; Brauer, M; White, R; Petkau, J. (2003). Air pollution and daily mortality in a city with low levels of pollution. Environ. Health Perspect. 111: 45–51.

Villeneuve, PJ; Chen, L; Rowe, BH; Coates, F. (2007). Outdoor air pollution and emergency department visits for asthma among children and adults: A case-crossover study in northern Alberta, Canada. Environ Health Global Access Sci Source 6: 40. http://dx.doi.org/10.1186/1476-069X-6-40.

Wegman, LN. (2012) Memorandum from Lydia N. Wegman, Director, Health and Environmental Impacts Division, Office of Air Quality Planning and Standards, U.S. EPA, to Holly Stallworth, Designated Federal Officer, Clean Air Scientific Advisory Committee. Re: Updates to Information Presented in the Scope and Methods Plans for the Ozone NAAQS Health and Welfare Risk and Exposure Assessments. May 2, 2012.

Wells, B. (2015a). Data Analyses Supporting Responses to Public Comments for the O_3 NAAQS. Memorandum to the Ozone NAAQS Review Docket, EPA-HQ-OAR-2008-0699.

Wells, B. (2015b). Expanded Comparison of Ozone Metrics Considered in Current NAAQS Review. Memorandum to the Ozone NAAQS Review Docket, EPA-HQ-OAR-2008-0699.

Wells, B. (2014a). Comparison of Ozone Metrics Considered in Current NAAQS Review. Memorandum to the Ozone NAAQS Review Docket, EPA-HQ-OAR-2008-0699.

Wells, B. (2014b). Analysis of Overlapping 8-hour Daily Maximum Ozone Concentrations. Memorandum to the Ozone NAAQS Review Docket, EPA-HQ-OAR-2008-0699.

Wittig, VE; Ainsworth, EA; Naidu, SL; Karnosky, DF; Long, SP. (2009). Quantifying the impact of current and future tropospheric ozone on tree biomass, growth, physiology and biochemistry: A quantitative meta-analysis. Global Change Biol 15: 396-424. http://dx.doi.org/10.1111/j.1365-2486.2008.01774.x.

Wittig, VE; Ainsworth, EA; Long, SP. (2007). To what extent do current and projected increases in surface ozone affect photosynthesis and stomatal conductance of trees? A meta-analytic review of the last 3 decades of experiments [Review]. Plant Cell Environ 30: 1150-1162. http://dx.doi.org/10.1111/j.1365-3040.2007.01717.x.

Wolff, GT. (1995). Letter to EPA Administrator Carol Browner: "CASAC Closure on the Primary Standard Portion of the Staff Paper for Ozone," EPA-SAB-CASAC-LTR-96-002, November 30, 1995.

Wong, CM; Vichit-Vadakan, N; Vajanapoom, N; Ostro, B; Thach, TQ; Chau, PY; Chan, EK; Chung, RY; Ou, CQ; Yang, L; Peiris, JS; Thomas, GN; Lam, TH; Wong, TW; Hedley, AJ; Kan, H; Chen, B; Zhao, N; London, SJ; Song, G; Chen, G; Zhang, Y; Jiang, L; Qian, Z; He, Q; Lin, HM; Kong, L; Zhou, D; Liang, S; Zhu, Z; Liao, D; Liu, W; Bentley, CM; Dan, J; Wang, B; Yang, N; Xu, S; Gong, J; Wei, H; Sun, H; Qin, Z. (2010). Part 5. Public health and air pollution in Asia (PAPA): A combined analysis of four studies of air pollution and mortality. In Public Health and Air Pollution in Asia (PAPA): Coordinated Studies of Short-Term Exposure to Air Pollution and Daily Mortality in Four Cities (pp. 377-418). Boston, MA: Health Effects Institute. http://pubs.healtheffects.org/view.php?id=348.

Zanobetti, A; Schwartz, J. (2011). Ozone and survival in four cohorts with potentially predisposing diseases. Am J Respir Crit Care Med 184: 836-841. http://dx.doi.org/10.1164/rccm.201102-0227OC.

Zanobetti, A; Schwartz, J. (2008). Mortality displacement in the association of ozone with mortality: An analysis of 48 cities in the United States. Am J Respir Crit Care Med 177: 184-189. http://dx.doi.org/10.1164/rccm.200706-823OC.

Zanobetti, A; Schwartz, J. (2006). Air pollution and emergency admissions in Boston, MA. J Epidemiol Community Health 60: 890-895. http://dx.doi.org/10.1136/jech.2005.039834.

List of Subjects

40 CFR Part 50

Environmental protection, Air pollution control, Carbon monoxide, Lead, Nitrogen dioxide, Ozone, Particulate matter, Sulfur oxides.

40 CFR Part 51

Environmental protection, Administrative practices and procedures, Air pollution control, Intergovernmental relations.

40 CFR Part 52

Environmental Protection, Administrative practices and procedures, Air pollution control, Incorporation by reference, Intergovernmental relations.

40 CFR Part 53

Environmental protection, Administrative practice and procedure, Air pollution control, Reporting and recordkeeping requirements

40 CFR Part 58

Environmental protection, Administrative practice and procedure, Air pollution control, Intergovernmental relations, Reporting and recordkeeping requirements

_____

Dated:

_____

Gina McCarthy,
Administrator.

For the reasons set forth in the preamble, chapter I of title 40 of the Code of Federal Regulations is proposed to be amended as follows:

PART 50 – NATIONAL PRIMARY AND SECONDARY AMBIENT AIR QUALITY STANDARDS

1. The authority citation for part 50 continues to read as follows:

Authority: 42 U.S.C. 7401 et seq.

2. Amend §50.14 by:

a. Revising paragraphs (c)(2)(iii), (vi), and (3)(i);

b. Removing and reserving paragraphs (c)(2)(iv), (v), (3)(ii) and (iii);

3. The revisions read as follows:

§ 50.14 Treatment of air quality monitoring data influenced by exceptional events.

* * * * *

(c) ***

(2) ***

(iii) Flags placed on data as being due to an exceptional event together with an initial description of the event shall be submitted to EPA not later than July 1st of the calendar year following the year in which the flagged measurement occurred, except as allowed under paragraph (c)(2)(vi) of this section.

* * * * *

(vi) Table 1 identifies the data submission process for a new or revised NAAQS. This process shall apply to those data that will or may influence the initial designation of areas for any new or revised NAAQS.

Table 1. Schedule for Flagging and Documentation Submission for Data Influenced by Exceptional Events for Use in Initial Area Designations

Exceptional Events / Regulatory Action	Exceptional Events Deadline Schedule[d]
Flagging and initial event description deadline for data years 1, 2 and 3.[a]	If state and tribal initial designation recommendations for a new/revised NAAQS are due August through January, then the flagging and initial event description deadline will be the July 1 prior to the recommendation deadline. If state and tribal recommendations for a new/revised NAAQS are due February through July, then the flagging and initial event description deadline will be the January 1 prior to the recommendation deadline.
Exceptional events demonstration submittal deadline for data years 1, 2 and 3.[a]	No later than the date that state and tribal recommendations are due to EPA.
Flagging, initial event description and exceptional events demonstration submittal deadline for data year 4[b] and, where applicable, data year 5.[c]	By the last day of the month that is 1 year and 7 months after promulgation of a new/revised NAAQS, unless either option a or b applies. a. If the EPA follows a 3-year designation schedule, the deadline is 2 years and 7 months after promulgation of a new/revised NAAQS. b. If the EPA notifies the state/tribe that it intends to complete the initial area designations process according to a schedule between 2 and 3 years, the deadline is 5 months prior to the date specified for final designations decisions in such EPA notification.

[a] Where data years 1, 2, and 3 are those years expected to be considered in state and tribal recommendations.
[b] Where data year 4 is the additional year of data that the EPA may consider when it makes final area designations for a new/revised NAAQS under the standard designations schedule.
[c] Where data year 5 is the additional year of data that the EPA may consider when it makes final area designations for a new/revised NAAQS under an extended designations schedule.
[d] The date by which air agencies must certify their ambient air quality monitoring data in AQS is annually on May 1 of the year following the year of data collection as specified in 40 CFR 58.15(a)(2). In some cases, however, air agencies may choose to certify a prior year's data in advance of May 1 of the following year, particularly if the EPA has indicated its intent to promulgate final designations in the first 8 months of the calendar year. Data flagging, initial event description and exceptional events demonstration deadlines for "early certified" data will follow the deadlines for "year 4" and "year 5" data.

(3) Submission of demonstrations. (i) Except as allowed under paragraph (c)(2)(vi) of this

section, a State that has flagged data as being due to an exceptional event and is requesting exclusion of the affected measurement data shall, after notice and opportunity for public comment, submit a demonstration to justify data exclusion to EPA not later than the lesser of 3 years following the end of the calendar quarter in which the flagged concentration was recorded or 12 months prior to the date that a regulatory decision must be made by EPA. A State must submit the public comments it received along with its demonstration to EPA.

* * * * *

4. Section 50.19 is added to read as follows:

§ 50.19 National primary and secondary ambient air quality standards for ozone.

(a) The level of the national 8-hour primary ambient air quality standard for ozone (O_3) is 0.070 parts per million (ppm), daily maximum 8-hour average, measured by a reference method based on appendix D to this part and designated in accordance with part 53 of this chapter or an equivalent method designated in accordance with part 53 of this chapter.

(b) The 8-hour primary O_3 ambient air quality standard is met at an ambient air quality monitoring site when the 3-year average of the annual fourth-highest daily maximum 8-hour average O_3 concentration is less than or equal to 0.070 ppm, as determined in accordance with appendix U to this part.

(c) The level of the national secondary ambient air quality standard for O_3 is 0.070 ppm, daily maximum 8-hour average, measured by a reference method based on appendix D to this part and designated in accordance with part 53 of this chapter or an equivalent method designated in accordance with part 53 of this chapter.

(d) The 8-hour secondary O_3 ambient air quality standard is met at an ambient air quality monitoring site when the 3-year average of the annual fourth-highest daily maximum 8-hour average O_3 concentration is less than or equal to 0.070 ppm, as determined in accordance with appendix U to this part.

5. Revise appendix D to part 50 under subchapter C to read as follows:

APPENDIX D TO PART 50 — REFERENCE MEASUREMENT PRINCIPLE AND CALIBRATION PROCEDURE FOR THE MEASUREMENT OF OZONE IN THE ATMOSPHERE (CHEMILUMINESCENCE METHOD)

1.0 Applicability.

1.1 This chemiluminescence method provides reference measurements of the concentration of ozone (O_3) in ambient air for determining compliance with the national primary and secondary ambient air quality standards for O_3 as specified in 40 CFR part 50. This automated method is applicable to the measurement of ambient O_3 concentrations using continuous (real-time) sampling and analysis. Additional quality assurance procedures and guidance are provided in 40 CFR part 58, appendix A, and in Reference 14.

2.0 Measurement Principle.

2.1 This reference method is based on continuous automated measurement of the intensity of the characteristic chemiluminescence released by the gas phase reaction of O_3 in sampled air with either ethylene (C_2H_4) or nitric oxide (NO) gas. An ambient air sample stream and a specific flowing concentration of either C_2H_4 (ET-CL method) or NO (NO-CL method) are mixed in a measurement cell, where the resulting chemiluminescence is quantitatively measured by a sensitive photo-detector. References 8-11 describe the chemiluminescence measurement principle.

2.2 The measurement system is calibrated by referencing the instrumental chemiluminescence measurements to certified O_3 standard concentrations generated in a

dynamic flow system and assayed by photometry to be traceable to a National Institute of Standards and Technology (NIST) standard reference photometer for O_3 (see Section 4, Calibration Procedure, below).

2.3 An analyzer implementing this measurement principle is shown schematically in Figure 1. Designs implementing this measurement principle must include: an appropriately designed mixing and measurement cell; a suitable quantitative photometric measurement system with adequate sensitivity and wave length specificity for O_3; a pump, flow control, and sample conditioning system for sampling the ambient air and moving it into and through the measurement cell; a sample air dryer as necessary to meet the water vapor interference limit requirement specified in subpart B of part 53 of this chapter; a means to supply, meter, and mix a constant, flowing stream of either C_2H_4 or NO gas of fixed concentration with the sample air flow in the measurement cell; suitable electronic control and measurement processing capability; and other associated apparatus as may be necessary. The analyzer must be designed and constructed to provide accurate, repeatable, and continuous measurements of O_3 concentrations in ambient air, with measurement performance that meets the requirements specified in subpart B of part 53 of this chapter.

2.4 An analyzer implementing this measurement principle and calibration procedure will be considered a federal reference method (FRM) only if it has been designated as a reference method in accordance with part 53 of this chapter.

2.5 Sampling considerations. The use of a particle filter on the sample inlet line of a chemiluminescence O_3 FRM analyzer is required to prevent buildup of particulate matter in the measurement cell and inlet components. This filter must be changed weekly (or at least often as specified in the manufacturer's operation/instruction manual), and the sample inlet system used

with the analyzer must be kept clean, to avoid loss of O_3 in the O_3 sample air prior to the concentration measurement.

3.0 Interferences.

3.1 Except as described in 3.2 below, the chemiluminescence measurement system is inherently free of significant interferences from other pollutant substances that may be present in ambient air.

3.2 A small sensitivity to variations in the humidity of the sample air is minimized by a sample air dryer. Potential loss of O_3 in the inlet air filter and in the air sample handling components of the analyzer and associated exterior air sampling components due to buildup of airborne particulate matter is minimized by filter replacement and cleaning of the other inlet components.

4.0 Calibration Procedure.

4.1 Principle. The calibration procedure is based on the photometric assay of O_3 concentrations in a dynamic flow system. The concentration of O_3 in an absorption cell is determined from a measurement of the amount of 254 nm light absorbed by the sample. This determination requires knowledge of (1) the absorption coefficient (α) of O_3 at 254 nm, (2) the optical path length (l) through the sample, (3) the transmittance of the sample at a nominal wavelength of 254 nm, and (4) the temperature (T) and pressure (P) of the sample. The transmittance is defined as the ratio I/I_0, where I is the intensity of light which passes through the cell and is sensed by the detector when the cell contains an O_3 sample, and I_0 is the intensity of light which passes through the cell and is sensed by the detector when the cell contains zero air. It is assumed that all conditions of the system, except for the contents of the absorption cell, are

identical during measurement of I and I_0. The quantities defined above are related by the Beer-Lambert absorption law,

$$\text{Transmitance} = \frac{I}{I_0} = e^{-\alpha c l} \qquad (1)$$

where:

α = absorption coefficient of O_3 at 254 nm = 308 ±4 atm−1 cm−1 at 0 °C and 760 torr,[1, 2, 3, 4, 5, 6, 7]

c = O_3 concentration in atmospheres, and

l = optical path length in cm.

A stable O_3 generator is used to produce O_3 concentrations over the required calibration concentration range. Each O_3 concentration is determined from the measurement of the transmittance (I/I_0) of the sample at 254 nm with a photometer of path length l and calculated from the equation,

$$c(\text{atm}) = -\frac{1}{\alpha l}\left(\ln\frac{I}{I_0}\right) \qquad (2a)$$

or

$$c(\text{ppm}) = -\frac{10^6}{\alpha l}\left(\ln\frac{I}{I_0}\right). \qquad (2b)$$

The calculated O_3 concentrations must be corrected for O_3 losses, which may occur in the photometer, and for the temperature and pressure of the sample.

4.2 Applicability. This procedure is applicable to the calibration of ambient air O_3 analyzers, either directly or by means of a transfer standard certified by this procedure. Transfer standards must meet the requirements and specifications set forth in Reference 12.

4.3 Apparatus. A complete UV calibration system consists of an O_3 generator, an output port or manifold, a photometer, an appropriate source of zero air, and other components as

necessary. The configuration must provide a stable O_3 concentration at the system output and allow the photometer to accurately assay the output concentration to the precision specified for the photometer (4.3.1). Figure 2 shows a commonly used configuration and serves to illustrate the calibration procedure, which follows. Other configurations may require appropriate variations in the procedural steps. All connections between components in the calibration system downstream of the O_3 generator must be of glass, Teflon, or other relatively inert materials. Additional information regarding the assembly of a UV photometric calibration apparatus is given in Reference 13. For certification of transfer standards which provide their own source of O_3, the transfer standard may replace the O_3 generator and possibly other components shown in Figure 2; see Reference 12 for guidance.

4.3.1 UV photometer. The photometer consists of a low-pressure mercury discharge lamp, (optional) collimation optics, an absorption cell, a detector, and signal-processing electronics, as illustrated in Figure 2. It must be capable of measuring the transmittance, I/I_0, at a wavelength of 254 nm with sufficient precision such that the standard deviation of the concentration measurements does not exceed the greater of 0.005 ppm or 3% of the concentration. Because the low-pressure mercury lamp radiates at several wavelengths, the photometer must incorporate suitable means to assure that no O_3 is generated in the cell by the lamp, and that at least 99.5% of the radiation sensed by the detector is 254 nm radiation. (This can be readily achieved by prudent selection of optical filter and detector response characteristics.) The length of the light path through the absorption cell must be known with an accuracy of at least 99.5%. In addition, the cell and associated plumbing must be designed to minimize loss of O_3 from contact with cell walls and gas handling components. See Reference 13 for additional information.

4.3.2 Air flow controllers. Air flow controllers are devices capable of regulating air flows as necessary to meet the output stability and photometer precision requirements.

4.3.3 Ozone generator. The ozone generator used must be capable of generating stable levels of O_3 over the required concentration range.

4.3.4 Output manifold. The output manifold must be constructed of glass, Teflon, or other relatively inert material, and should be of sufficient diameter to insure a negligible pressure drop at the photometer connection and other output ports. The system must have a vent designed to insure atmospheric pressure in the manifold and to prevent ambient air from entering the manifold.

4.3.5 Two-way valve. A manual or automatic two-way valve, or other means is used to switch the photometer flow between zero air and the O_3 concentration.

4.3.6 Temperature indicator. A device to indicate temperature must be used that is accurate to ±1 °C.

4.3.7 Barometer or pressure indicator. A device to indicate barometric pressure must be used that is accurate to ±2 torr.

4.4 Reagents.

4.4.1 Zero air. The zero air must be free of contaminants which would cause a detectable response from the O_3 analyzer, and it must be free of NO, C_2H_4, and other species which react with O_3. A procedure for generating suitable zero air is given in Reference 13. As shown in Figure 2, the zero air supplied to the photometer cell for the I_0 reference measurement must be derived from the same source as the zero air used for generation of the O_3 concentration to be assayed (I measurement). When using the photometer to certify a transfer standard having its own source of O_3, see Reference 12 for guidance on meeting this requirement.

4.5 Procedure.

4.5.1 General operation. The calibration photometer must be dedicated exclusively to use as a calibration standard. It must always be used with clean, filtered calibration gases, and never used for ambient air sampling. A number of advantages are realized by locating the calibration photometer in a clean laboratory where it can be stationary, protected from the physical shock of transportation, operated by a responsible analyst, and used as a common standard for all field calibrations via transfer standards.

4.5.2 Preparation. Proper operation of the photometer is of critical importance to the accuracy of this procedure. Upon initial operation of the photometer, the following steps must be carried out with all quantitative results or indications recorded in a chronological record, either in tabular form or plotted on a graphical chart. As the performance and stability record of the photometer is established, the frequency of these steps may be reduced to be consistent with the documented stability of the photometer and the guidance provided in Reference 12.

4.5.2.1 Instruction manual. Carry out all set up and adjustment procedures or checks as described in the operation or instruction manual associated with the photometer.

4.5.2.2 System check. Check the photometer system for integrity, leaks, cleanliness, proper flow rates, etc. Service or replace filters and zero air scrubbers or other consumable materials, as necessary.

4.5.2.3 Linearity. Verify that the photometer manufacturer has adequately established that the linearity error of the photometer is less than 3%, or test the linearity by dilution as follows: Generate and assay an O_3 concentration near the upper range limit of the system or appropriate calibration scale for the instrument, then accurately dilute that concentration with zero air and re-

assay it. Repeat at several different dilution ratios. Compare the assay of the original concentration with the assay of the diluted concentration divided by the dilution ratio, as follows

$$E = \frac{A_1 - A_2/R}{A_1} \times 100\% \qquad (3)$$

where:

E = linearity error, percent

A_1 = assay of the original concentration

A_2 = assay of the diluted concentration

R = dilution ratio = flow of original concentration divided by the total flow

The linearity error must be less than 5%. Since the accuracy of the measured flow-rates will affect the linearity error as measured this way, the test is not necessarily conclusive. Additional information on verifying linearity is contained in Reference 13.

4.5.2.4 Inter-comparison. The photometer must be inter-compared annually, either directly or via transfer standards, with a NIST standard reference photometer (SRP) or calibration photometers used by other agencies or laboratories.

4.5.2.5 Ozone losses. Some portion of the O_3 may be lost upon contact with the photometer cell walls and gas handling components. The magnitude of this loss must be determined and used to correct the calculated O_3 concentration. This loss must not exceed 5%. Some guidelines for quantitatively determining this loss are discussed in Reference 13.

4.5.3 Assay of O_3 concentrations. The operator must carry out the following steps to properly assay O_3 concentrations.

4.5.3.1 Allow the photometer system to warm up and stabilize.

4.5.3.2 Verify that the flow rate through the photometer absorption cell, F, allows the cell to be flushed in a reasonably short period of time (2 liter/min is a typical flow). The precision of

the measurements is inversely related to the time required for flushing, since the photometer drift error increases with time.

4.5.3.3 Ensure that the flow rate into the output manifold is at least 1 liter/min greater than the total flow rate required by the photometer and any other flow demand connected to the manifold.

4.5.3.4 Ensure that the flow rate of zero air, Fz, is at least 1 liter/min greater than the flow rate required by the photometer.

4.5.3.5 With zero air flowing in the output manifold, actuate the two-way valve to allow the photometer to sample first the manifold zero air, then Fz. The two photometer readings must be equal ($I = I_0$).

NOTE: In some commercially available photometers, the operation of the two-way valve and various other operations in section 4.5.3 may be carried out automatically by the photometer.

4.5.3.6 Adjust the O_3 generator to produce an O_3 concentration as needed.

4.5.3.7 Actuate the two-way valve to allow the photometer to sample zero air until the absorption cell is thoroughly flushed and record the stable measured value of Io.

4.5.3.8 Actuate the two-way valve to allow the photometer to sample the O_3 concentration until the absorption cell is thoroughly flushed and record the stable measured value of I.

4.5.3.9 Record the temperature and pressure of the sample in the photometer absorption cell. (See Reference 13 for guidance.)

4.5.3.10 Calculate the O_3 concentration from equation 4. An average of several determinations will provide better precision.

$$[O_3]_{OUT} = \left(\frac{-1}{\alpha l}\ln\frac{I}{I_0}\right)\left(\frac{T}{273}\right)\left(\frac{760}{P}\right)\times\frac{10^6}{L} \qquad (4)$$

where:

$[O_3]_{OUT}$ = O_3 concentration, ppm

α = absorption coefficient of O_3 at 254 nm = 308 atm−1 cm−1 at 0° C and 760 torr

l = optical path length, cm

T = sample temperature, K

P = sample pressure, torr

L = correction factor for O_3 losses from 4.5.2.5 = (1−fraction of O_3 lost).

NOTE: Some commercial photometers may automatically evaluate all or part of equation 4. It is the operator's responsibility to verify that all of the information required for equation 4 is obtained, either automatically by the photometer or manually. For "automatic" photometers which evaluate the first term of equation 4 based on a linear approximation, a manual correction may be required, particularly at higher O_3 levels. See the photometer instruction manual and Reference 13 for guidance.

4.5.3.11 Obtain additional O_3 concentration standards as necessary by repeating steps 4.5.3.6 to 4.5.3.10 or by Option 1.

4.5.4 Certification of transfer standards. A transfer standard is certified by relating the output of the transfer standard to one or more O_3 calibration standards as determined according to section 4.5.3. The exact procedure varies depending on the nature and design of the transfer standard. Consult Reference 12 for guidance.

4.5.5 Calibration of ozone analyzers. Ozone analyzers must be calibrated as follows, using O_3 standards obtained directly according to section 4.5.3 or by means of a certified transfer standard.

4.5.5.1 Allow sufficient time for the O_3 analyzer and the photometer or transfer standard to warm-up and stabilize.

4.5.5.2 Allow the O_3 analyzer to sample zero air until a stable response is obtained and then adjust the O_3 analyzer's zero control. Offsetting the analyzer's zero adjustment to +5% of scale is recommended to facilitate observing negative zero drift (if any). Record the stable zero air response as "Z".

4.5.5.3 Generate an O_3 concentration standard of approximately 80% of the desired upper range limit (URL) of the O_3 analyzer. Allow the O_3 analyzer to sample this O_3 concentration standard until a stable response is obtained.

4.5.5.4 Adjust the O_3 analyzer's span control to obtain the desired response equivalent to the calculated standard concentration. Record the O_3 concentration and the corresponding analyzer response. If substantial adjustment of the span control is necessary, recheck the zero and span adjustments by repeating steps 4.5.5.2 to 4.5.5.4.

4.5.5.5 Generate additional O_3 concentration standards (a minimum of 5 are recommended) over the calibration scale of the O_3 analyzer by adjusting the O_3 source or by Option 1. For each O_3 concentration standard, record the O_3 concentration and the corresponding analyzer response.

4.5.5.6 Plot the O_3 analyzer responses (vertical or Y-axis) versus the corresponding O_3 standard concentrations (horizontal or X-axis). Compute the linear regression slope and intercept and plot the regression line to verify that no point deviates from this line by more than 2 percent of the maximum concentration tested.

4.5.5.7 <u>Option 1</u>: The various O_3 concentrations required in steps 4.5.3.11 and 4.5.5.5 may be obtained by dilution of the O_3 concentration generated in steps 4.5.3.6 and 4.5.5.3. With

this option, accurate flow measurements are required. The dynamic calibration system may be modified as shown in Figure 3 to allow for dilution air to be metered in downstream of the O_3 generator. A mixing chamber between the O_3 generator and the output manifold is also required. The flow rate through the O_3 generator (Fo) and the dilution air flow rate (FD) are measured with a flow or volume standard that is traceable to a NIST flow or volume calibration standard. Each O_3 concentration generated by dilution is calculated from:

$$[O_3]'_{OUT} = [O_3]_{OUT} \left(\frac{F_O}{F_O + F_D}\right) \qquad (5)$$

where:

$[O_3]'_{OUT}$ = diluted O_3 concentration, ppm

FO = flow rate through the O_3 generator, liter/min

FD = diluent air flow rate, liter/min

Note: Additional information on calibration and pollutant standards is provided in Section 12 of Reference 14.

5.0 Frequency of Calibration.

5.1 The frequency of calibration, as well as the number of points necessary to establish the calibration curve, and the frequency of other performance checking will vary by analyzer; however, the minimum frequency, acceptance criteria, and subsequent actions are specified in Appendix D of Reference 14: Measurement Quality Objectives and Validation Templates. The user's quality control program shall provide guidelines for initial establishment of these variables and for subsequent alteration as operational experience is accumulated. Manufacturers of analyzers should include in their instruction/operation manuals information and guidance as to these variables and on other matters of operation, calibration, routine maintenance, and quality control.

6.0 References.

1. E.C.Y. Inn and Y. Tanaka, “Absorption coefficient of Ozone in the Ultraviolet and Visible Regions”, J. Opt. Soc. Am., 43, 870 (1953).

2. A. G. Hearn, “Absorption of Ozone in the Ultraviolet and Visible Regions of the Spectrum”, Proc. Phys. Soc. (London), 78, 932 (1961).

3. W. B. DeMore and O. Raper, “Hartley Band Extinction Coefficients of Ozone in the Gas Phase and in Liquid Nitrogen, Carbon Monoxide, and Argon”, J. Phys. Chem., 68, 412 (1964).

4. M. Griggs, “Absorption Coefficients of Ozone in the Ultraviolet and Visible Regions”, J. Chem. Phys., 49, 857 (1968).

5. K. H. Becker, U. Schurath, and H. Seitz, “Ozone Olefin Reactions in the Gas Phase. 1. Rate Constants and Activation Energies”, Int'l Jour. of Chem. Kinetics, VI, 725 (1974).

6. M. A. A. Clyne and J. A. Coxom, “Kinetic Studies of Oxy-halogen Radical Systems”, Proc. Roy. Soc., A303, 207 (1968).

7. J. W. Simons, R. J. Paur, H. A. Webster, and E. J. Bair, “Ozone Ultraviolet Photolysis. VI. The Ultraviolet Spectrum”, J. Chem. Phys., 59, 1203 (1973).

8. Ollison, W.M.; Crow, W.; Spicer, C.W. “Field testing of new-technology ambient air ozone monitors.” J. Air Waste Manage. Assoc., 63 (7), 855-863 (2013).

9. Parrish, D.D.; Fehsenfeld, F.C. “Methods for gas-phase measurements of ozone, ozone precursors and aerosol precursors.” Atmos. Environ., 34 (12-14), 1921-1957(2000).

10. Ridley, B.A.; Grahek, F.E.; Walega, J.G. “A small, high-sensitivity, medium-response ozone detector suitable for measurements from light aircraft.” J. Atmos. Oceanic Technol., 9 (2), 142-148(1992).

11. Boylan, P., Helmig, D., and Park, J.H. “Characterization and mitigation of water vapor effects in the measurement of ozone by chemiluminescence with nitric oxide.” Atmos. Meas. Tech. 7, 1231-1244 (2014).

12. Transfer Standards for Calibration of Ambient Air Monitoring Analyzers for Ozone, EPA publication number EPA-454/B-13-004, October 2013. EPA, Office of Air Quality Planning and Standards, Research Triangle Park, NC 27711. [Available at www.epa.gov/ttnamti1/files/ambient/qaqc/OzoneTransferStandardGuidance.pdf.]

13. Technical Assistance Document for the Calibration of Ambient Ozone Monitors, EPA publication number EPA-600/4-79-057, September, 1979. [Available at www.epa.gov/ttnamti1/files/ambient/criteria/4-79-057.pdf.]

14. QA Handbook for Air Pollution Measurement Systems—Volume II. Ambient Air Quality Monitoring Program. EPA-454/B-13-003, May 2013. [Available at http://www.epa.gov/ttnamti1/files/ambient/pm25/qa/QA-Handbook-Vol-II.pdf.]

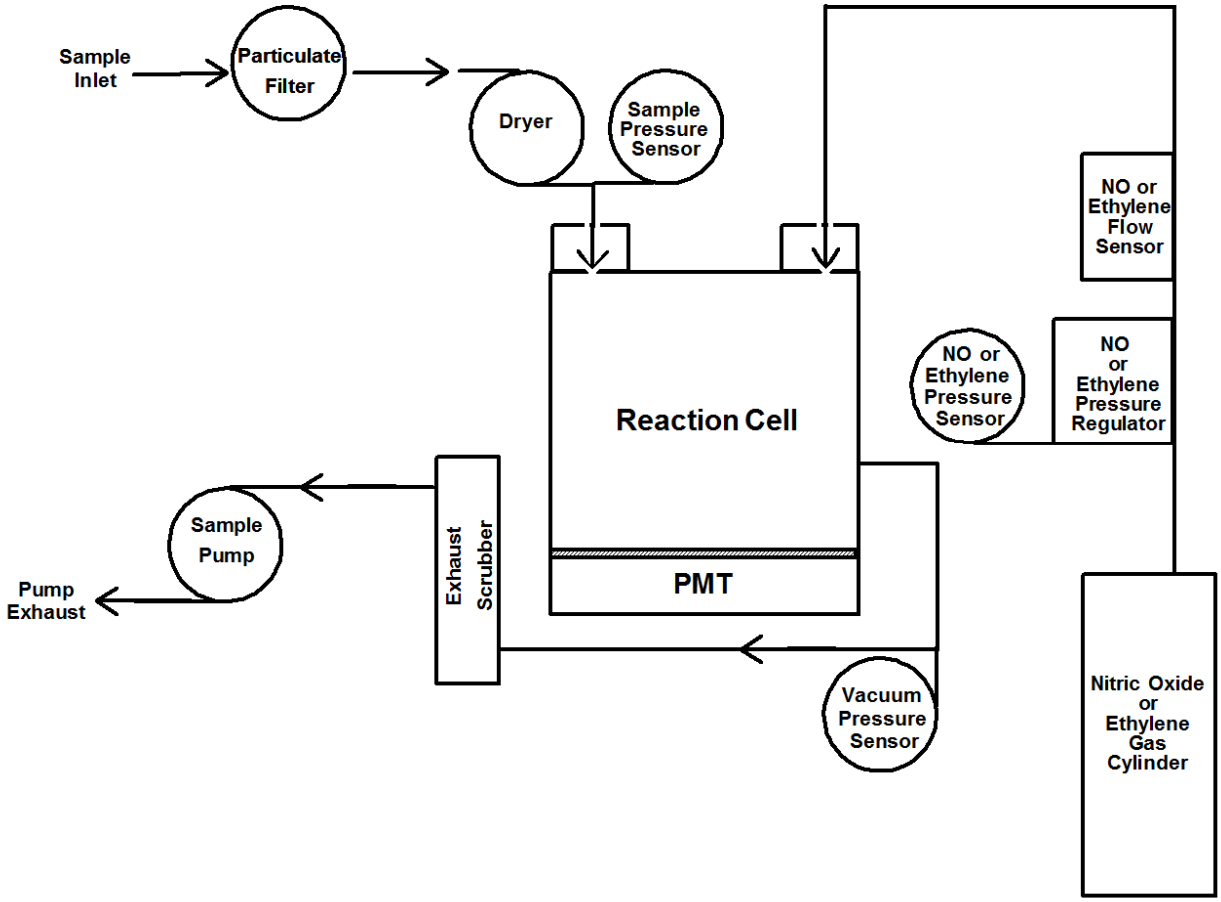

Figure 1. Gas-phase chemiluminescence analyzer schematic diagram, where PMT means photomultiplier tube.

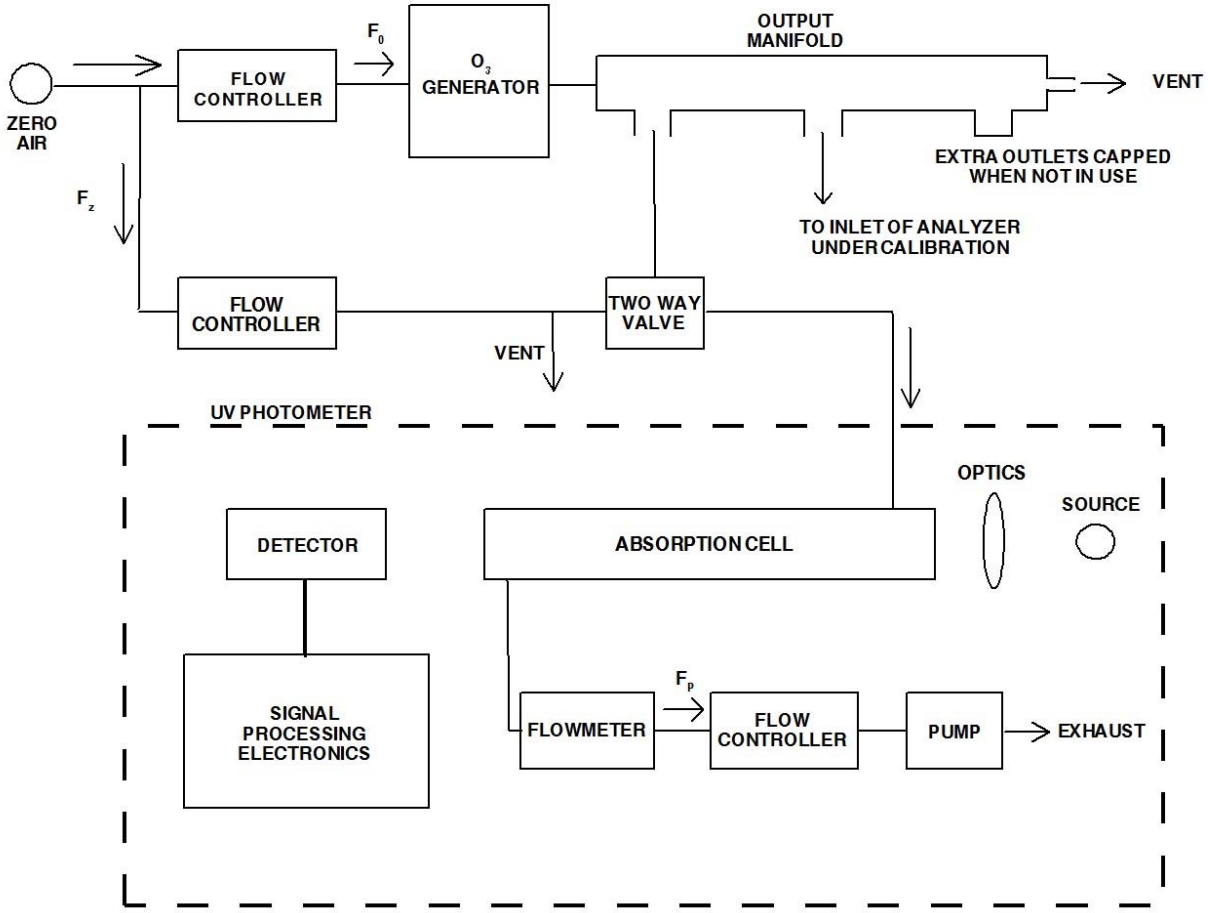

Figure 2. Schematic diagram of a typical UV photometric calibration system.

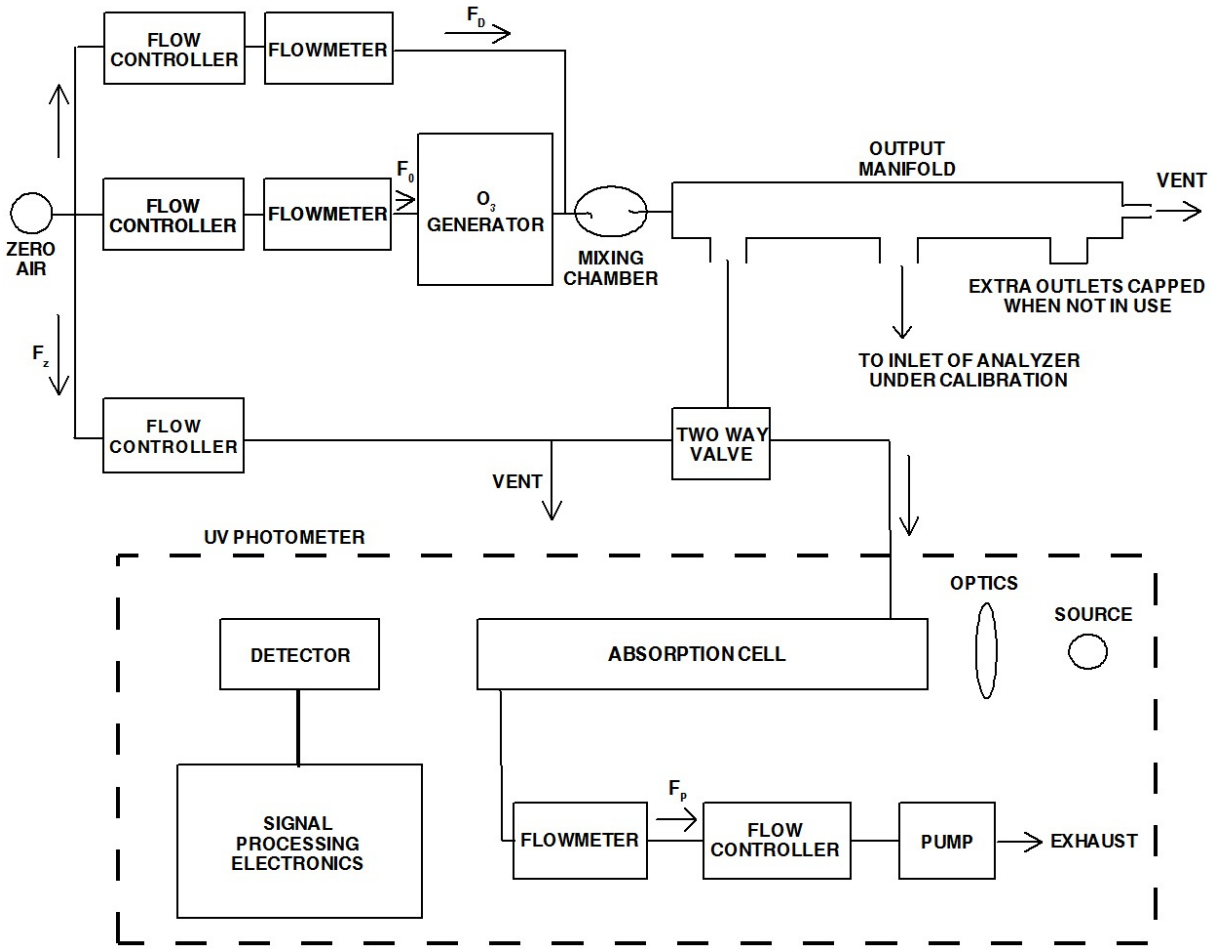

Figure 3. Schematic diagram of a typical UV photometric calibration system (Option 1).

6. Add appendix U to Part 50 under subchapter C to read as follows:

APPENDIX U TO PART 50—INTERPRETATION OF THE PRIMARY AND SECONDARY NATIONAL AMBIENT AIR QUALITY STANDARDS FOR OZONE

1. General

(a) This appendix explains the data handling conventions and computations necessary for determining whether the primary and secondary national ambient air quality standards (NAAQS) for ozone (O_3) specified in § 50.19 are met at an ambient O_3 air quality monitoring site. Data reporting, data handling, and computation procedures to be used in making comparisons between

reported O_3 concentrations and the levels of the O_3 NAAQS are specified in the following sections.

(b) Whether to exclude or retain the data affected by exceptional events is determined by the requirements under §§ 50.1, 50.14 and 51.930.

(c) The terms used in this appendix are defined as follows:

8-hour average refers to the moving average of eight consecutive hourly O_3 concentrations measured at a site, as explained in section 3 of this appendix.

Annual fourth-highest daily maximum refers to the fourth highest value measured at a site during a year.

Collocated monitors refers to the instance of two or more O_3 monitors operating at the same physical location.

Daily maximum 8-hour average O_3 concentration refers to the maximum calculated 8-hour average value measured at a site on a particular day, as explained in section 3 of this appendix.

Design value refers to the metric (*i.e.*, statistic) that is used to compare ambient O_3 concentration data measured at a site to the NAAQS in order to determine compliance, as explained in section 4 of this appendix.

Minimum data completeness requirements refer to the amount of data that a site is required to collect in order to make a valid determination that the site is meeting the NAAQS.

Monitor refers to a physical instrument used to measure ambient O_3 concentrations.

O_3 *monitoring season* refers to the span of time within a year when individual states are required to measure ambient O_3 concentrations, as listed in Appendix D to part 58 of this chapter.

Site refers to an ambient O_3 air quality monitoring site.

Site data record refers to the set of hourly O_3 concentration data collected at a site for use in comparisons with the NAAQS.

Year refers to calendar year.

2. Selection of Data for use in Comparisons with the Primary and Secondary Ozone NAAQS

(a) All valid hourly O_3 concentration data collected using a federal reference method specified in Appendix D to this part, or an equivalent method designated in accordance with part 53 of this chapter, meeting all applicable requirements in part 58 of this chapter, and submitted to EPA's Air Quality System (AQS) database or otherwise available to EPA, shall be used in design value calculations.

(b) All design value calculations shall be implemented on a site-level basis. If data are reported to EPA from collocated monitors, those data shall be combined into a single site data record as follows:

(i) The monitoring agency shall designate one monitor as the primary monitor for the site.

(ii) Hourly O_3 concentration data from a secondary monitor shall be substituted into the site data record whenever a valid hourly O_3 concentration is not obtained from the primary monitor. In the event that hourly O_3 concentration data are available for more than one secondary monitor, the hourly concentration values from the secondary monitors shall be averaged and substituted into the site data record.

(c) In certain circumstances, including but not limited to site closures or relocations, data from two nearby sites may be combined into a single site data record for the purpose of calculating a valid design value. The appropriate Regional Administrator may approve such combinations after taking into consideration factors such as distance between sites, spatial and temporal

patterns in air quality, local emissions and meteorology, jurisdictional boundaries, and terrain features.

3. Data Reporting and Data Handling Conventions

(a) Hourly average O_3 concentrations shall be reported in parts per million (ppm) to the third decimal place, with additional digits to the right of the third decimal place truncated. Each hour shall be identified using local standard time (LST).

(b) Moving 8-hour averages shall be computed from the hourly O_3 concentration data for each hour of the year and shall be stored in the first, or start, hour of the 8-hour period. An 8-hour average shall be considered valid if at least 6 of the hourly concentrations for the 8-hour period are available. In the event that only 6 or 7 hourly concentrations are available, the 8-hour average shall be computed on the basis of the hours available, using 6 or 7, respectively, as the divisor. In addition, in the event that 5 or fewer hourly concentrations are available, the 8-hour average shall be considered valid if, after substituting zero for the missing hourly concentrations, the resulting 8-hour average is greater than the level of the NAAQS, or equivalently, if the sum of the available hourly concentrations is greater than 0.567 ppm. The 8-hour averages shall be reported to three decimal places, with additional digits to the right of the third decimal place truncated. Hourly O_3 concentrations that have been approved under §50.14 as having been affected by exceptional events shall be counted as missing or unavailable in the calculation of 8-hour averages.

(c) The daily maximum 8-hour average O_3 concentration for a given day is the highest of the 17 consecutive 8-hour averages beginning with the 8-hour period from 7:00 a.m. to 3:00 p.m. and ending with the 8-hour period from 11:00 p.m. to 7:00 a.m. the following day (i.e., the 8-hour averages for 7:00 a.m. to 11:00 p.m.). Daily maximum 8-hour average O_3 concentrations shall be

determined for each day with ambient O_3 monitoring data, including days outside the O_3 monitoring season if those data are available.

(d) A daily maximum 8-hour average O_3 concentration shall be considered valid if valid 8-hour averages are available for at least 13 of the 17 consecutive 8-hour periods starting from 7:00 a.m. to 11:00 p.m. In addition, in the event that fewer than 13 valid 8-hour averages are available, a daily maximum 8-hour average O_3 concentration shall also be considered valid if it is greater than the level of the NAAQS. Hourly O_3 concentrations that have been approved under § 50.14 as having been affected by exceptional events shall be included when determining whether these criteria have been met.

(e) The primary and secondary O_3 design value statistic is the annual fourth-highest daily maximum 8-hour O_3 concentration, averaged over three years, expressed in ppm. The fourth-highest daily maximum 8-hour O_3 concentration for each year shall be determined based only on days meeting the validity criteria in 3(d). The 3-year average shall be computed using the three most recent, consecutive years of ambient O_3 monitoring data. Design values shall be reported in ppm to three decimal places, with additional digits to the right of the third decimal place truncated.

4. Comparisons with the Primary and Secondary Ozone NAAQS

(a) The primary and secondary national ambient air quality standards for O_3 are met at an ambient air quality monitoring site when the 3-year average of the annual fourth-highest daily maximum 8-hour average O_3 concentration (i.e., the design value) is less than or equal to 0.070 ppm.

(b) A design value greater than the level of the NAAQS is always considered to be valid. A design value less than or equal to the level of the NAAQS must meet minimum data

completeness requirements in order to be considered valid. These requirements are met for a 3-year period at a site if valid daily maximum 8-hour average O_3 concentrations are available for at least 90% of the days within the O_3 monitoring season, on average, for the 3-year period, with a minimum of at least 75% of the days within the O_3 monitoring season in any one year.

(c) When computing whether the minimum data completeness requirements have been met, meteorological or ambient data may be sufficient to demonstrate that meteorological conditions on missing days were not conducive to concentrations above the level of the NAAQS. Missing days assumed less than the level of the NAAQS are counted for the purpose of meeting the minimum data completeness requirements, subject to the approval of the appropriate Regional Administrator.

(d) Comparisons with the primary and secondary O_3 NAAQS are demonstrated by examples 1 and 2 as follows:

EXAMPLE 1: SITE MEETING THE PRIMARY AND SECONDARY O_3 NAAQS

Year	Percent valid days within O_3 monitoring season (Data completeness)	1st highest daily max 8-hour O_3 (ppm)	2nd highest daily max 8-hour O_3 (ppm)	3rd highest daily max 8-hour O_3 (ppm)	4th highest daily max 8-hour O_3 (ppm)	5th highest daily max 8-hour O_3 (ppm)
2014	100	0.082	0.080	0.075	0.069	0.068
2015	96	0.074	0.073	0.065	0.062	0.060
2016	98	0.070	0.069	0.067	0.066	0.060
Average	98				0.065	

As shown in Example 1, this site meets the primary and secondary O_3 NAAQS because the 3-year average of the annual fourth-highest daily maximum 8-hour average O_3 concentrations (i.e., 0.065666 ppm, truncated to 0.065 ppm) is less than or equal to 0.070 ppm. The minimum data completeness requirements are also met (i.e., design value is considered valid) because the average percent of days within the O_3 monitoring season with valid ambient monitoring data is greater than 90%, and no single year has less than 75% data completeness.

EXAMPLE 2: SITE FAILING TO MEET THE PRIMARY AND SECONDARY O3 O_3 NAAQS

Year	Percent valid days within O_3 monitoring season (Data completeness)	1st highest daily max 8-hour O_3 (ppm)	2nd highest daily max 8-hour O_3 (ppm)	3rd highest daily max 8-hour O_3 (ppm)	4th highest daily max 8-hour O_3 (ppm)	5th highest daily max 8-hour O_3 (ppm)
2014	96	0.085	0.080	0.079	0.074	0.072
2015	74	0.084	0.083	0.072	0.071	0.068
2016	98	0.083	0.081	0.081	0.075	0.074
Average	89				0.073	

As shown in Example 2, this site fails to meet the primary and secondary O_3 NAAQS because the 3-year average of the annual fourth-highest daily maximum 8-hour average O_3 concentrations (i.e., 0.073333 ppm, truncated to 0.073 ppm) is greater than 0.070 ppm, even though the annual data completeness is less than 75% in one year and the 3-year average data completeness is less than 90% (i.e., design value would not otherwise be considered valid).

PART 51—REQUIREMENTS FOR PREPARATION, ADOPTION, AND SUBMITTAL OF IMPLEMENTATION PLANS

7. The authority citation for part 51 continues to read as follows:

Authority: 23 U.S.C. 101; 42 U.S.C. 7401-7671q.

Subpart I——Review of New Sources and Modifications

8. Amend § 51.166 by adding paragraph (i)(11) to read as follows:

§ 51.166 Prevention of significant deterioration of air quality.

* * * * *

(i) * * *

(11) The plan may provide that the requirements of paragraph (k)(1) of this section shall not apply to a permit application for a stationary source or modification with respect to the revised national ambient air quality standards for ozone published on **[Insert date of publication in the Federal Register]** if:

(i) The reviewing authority has determined the permit application subject to this section to be complete on or before **[Insert signature date of this final rule]**. Instead, the requirements in paragraph (k)(1) of this section shall apply with respect to the national ambient air quality standards for ozone in effect at the time the reviewing authority determined the permit application to be complete; or

(ii) The reviewing authority has first published before **[Insert date 60 days after date of publication in the Federal Register]** a public notice of a preliminary determination or draft permit for the permit application subject to this section. Instead, the requirements in paragraph (k)(1) of this section shall apply with respect to the national ambient air quality standards for ozone in effect at the time of first publication of a public notice of the preliminary determination or draft permit.

* * * * *

PART 52—APPROVAL AND PROMULGATION OF IMPLEMENTATION PLANS

9. The authority citation for part 52 continues to read as follows:

Authority: 42 U.S.C. 7401 *et seq*.

10. Amend § 52.21 by adding paragraph (i)(12) to read as follows:

§ 52.21 Prevention of significant deterioration of air quality.

* * * * *

(i) * * *

(12) The requirements of paragraph (k)(1) of this section shall not apply to a permit application for a stationary source or modification with respect to the revised national ambient air quality standards for ozone published on **[Insert date of publication in the Federal Register]** if:

(i) The Administrator has determined the permit application subject to this section to be complete on or before **[Insert signature date of this final rule]**. Instead, the requirements in paragraph (k)(1) of this section shall apply with respect to the national ambient air quality standards for ozone in effect at the time the Administrator determined the permit application to be complete; or

(ii) The Administrator has first published before **[Insert date 60 days after date of publication in the Federal Register]** a public notice of a preliminary determination or draft permit for the permit application subject to this section. Instead, the requirements in paragraph (k)(1) of this section shall apply with respect to the national ambient air quality standards for ozone in effect on the date the Administrator first published a public notice of a preliminary determination or draft permit.

* * * * *

PART 53—AMBIENT AIR MONITORING REFERENCE AND EQUIVALENT METHODS

11. The authority citation for part 53 continues to read as follows:

Authority: Sec. 301(a) of the Clean Air Act (42 U.S.C. sec. 1857g(a)), as amended by sec. 15(c)(2) of Pub. L. 91-604, 84 Stat. 1713, unless otherwise noted.

Subpart A—General Provisions

§ 53.9 [Amended]

12. Amend § 53.9 by removing paragraph (i).

13. Amend § 53.14 by revising paragraph (c) introductory text to read as follows:

§ 53.14 Modification of a reference or equivalent method.

* * * * *

(c) Within 90 calendar days after receiving a report under paragraph (a) of this section, the Administrator will take one or more of the following actions:

* * * * *

Subpart B—Procedures for Testing Performance Characteristics of Automated Methods for SO_2, CO, O_3, and NO_2

14. Amend § 53.23 by revising paragraph (e)(1)(vi) to read as follows:

* * * * *

(e) * * *

(1) * * *

(vi) Precision: Variation about the mean of repeated measurements of the same pollutant concentration, denoted as the standard deviation expressed as a percentage of the upper range limits.[258]

* * * * *

15. Revise Table B-1 to Subpart B of Part 53 to read as follows:

[258] NO_2 precision in Table B-1 is also changed to percent to agree with the calculation specified in 53.23(e)(10)(vi).

Table B-1 to Subpart B of Part 53—Performance Limit Specifications for Automated Methods

Performance parameter	Units[1]	SO_2		O_3		CO		NO_2 (Std. range)	Definitions and test procedures
		Std. range[3]	Lower range[2,3]	Std. range[3]	Lower range[2,3]	Std. range[3]	Lower range[2,3]		
1. Range	ppm	0-0.5	<0.5	0-0.5	<0.5	0-50	<50	0-0.5	Sec. 53.23(a)
2. Noise	ppm	0.001	0.0005	0.0025	0.001	0.2	0.1	0.005	Sec. 53.23(b)
3. Lower detectable limit	ppm	0.002	0.001	0.005	0.002	0.4	0.2	0.010	Sec. 53.23(c)
4. Interference equivalent									
Each interferent	ppm	±0.005	[4]±0.005	±0.005	±0.005	±1.0	±0.5	±0.02	Sec. 53.23(d)
Total, all interferents	ppm	---	---	---	---	---	---	0.04	Sec. 53.23(d)
5. Zero drift, 12 and 24 hour	ppm	±0.004	±0.002	±0.004	±0.002	±0.5	±0.3	±0.02	Sec. 53.23(e)
6. Span drift, 24 hour									
20% of upper range limit	Percent	---	---	---	---	---	---	±20.0	Sec. 53.23(e)
80% of upper range limit	Percent	±3.0	±3.0	±3.0	±3.0	±2.0	±2.0	±5.0	Sec. 53.23(e)
7. Lag time	Minutes	2	2	2	2	2.0	2.0	20	Sec. 53.23(e)
8. Rise time	Minutes	2	2	2	2	2.0	2.0	15	Sec. 53.23(e)
9. Fall time	Minutes	2	2	2	2	2.0	2.0	15	Sec. 53.23(e)
10. Precision									
20 % of upper range limit		---	---	---	---	--	---		Sec. 53.23(e)
	Percent[5]	2	2	2	2	1.0	1.0	4	Sec. 53.23(e)
80 % of upper range limit		---	---	---	---	---	---		Sec. 53.23(e)
	Percent[5]	2	2	2	2	1.0	1.0	6	Sec. 53.23(e)

[1.] To convert from parts per million (ppm) to $\mu g/m^3$ at 25 °C and 760 mm Hg, multiply by M/0.02447, where M is the molecular weight of the gas. Percent means percent of the upper measurement range limit.

[2.] Tests for interference equivalent and lag time do not need to be repeated for any lower range provided the test for the standard range shows that the lower range specification (if applicable) is met for each of these test parameters.

[3.] For candidate analyzers having automatic or adaptive time constants or smoothing filters, describe their functional nature, and describe and conduct suitable tests to demonstrate their function aspects and verify that performances for calibration, noise, lag, rise, fall times, and precision are within specifications under all applicable conditions. For candidate analyzers with operator-selectable

time constants or smoothing filters, conduct calibration, noise, lag, rise, fall times, and precision tests at the highest and lowest settings that are to be included in the FRM or FEM designation.

[4.] For nitric oxide interference for the SO_2 UVF method, interference equivalent is ±0.0003 ppm for the lower range.

[5.] Standard deviation expressed as percent of the URL.

16. Revise Table B-3 to Subpart B of Part 53 to read as follows:

Table B-3 to Subpart B of Part 53—Interferent Test Concentration,[1] Parts per Million

Pollutant	Analyzer type	Hydrochloric acid	Ammonia	Hydrogen sulfide	Sulfur dioxide	Nitrogen dioxide	Nitric oxide	Carbon dioxide	Ethylene	Ozone	m-Xylene	Water vapor	Carbon monoxide	Methane	Ethane	Naphthalene
SO_2	Ultraviolet fluorescence			[5] 0.1	[4] 0.14	0.5	0.5			0.5	0.2	20,000				0.05
SO_2	Flame photometric			0.01	[4] 0.14			750				[3] 20,000	50			
SO_2	Gas chromatography			0.1	[4] 0.14			750				[3] 20,000	50			
SO_2	Spectrophotometric -wet chemical (pararosanaline)	0.2	0.1	0.1	[4] 0.14	0.5		750		0.5						
SO_2	Electrochemical	0.2	0.1	0.1	[4] 0.14	0.5	0.5		0.2	0.5		[3] 20,000				
SO_2	Conductivity	0.2	0.1		[4] 0.14	0.5		750								
SO_2	Spectrophotometric -gas phase, including DOAS				[4] 0.14	0.5				0.5	0.2					
O_3	Ethylene chemiluminescene			0.1				750		[4] 0.08		20,000				
O_3	NO-chemiluminescene			0.1		0.5		750		[4] 0.08		20,000				
O_3	Electrochemical		[3] 0.1		0.5	0.5				[4] 0.08						

O_3	Spectrophotometric -wet chemical (potassium iodide)		[3] 0.1		0.5	0.5	0.5			[4] 0.08						
O_3	Spectrophotometric -gas phase, including ultraviolet absorption and DOAS				0.5	0.5	0.5			[4] 0.08	0.02	20,000				
CO	Non-dispersive Infrared							750				20,000	[4] 10			
CO	Gas chromatography with flame ionization detector											20,000	[4] 10		0.5	
CO	Electrochemical						0.5		0.2			20,000	[4] 10			
CO	Catalytic combustion-thermal detection		0.1					750	0.2			20,000	[4] 10	5.0	0.5	
CO	IR fluorescence							750				20,000	[4] 10		0.5	
CO	Mercury replacement-UV photometric								0.2				[4] 10		0.5	
NO_2	Chemiluminescent		[3] 0.1		0.5	[4] 0.1	0.5					20,000				
NO_2	Spectrophotometric -wet chemical (azo-dyereaction)				0.5	[4] 0.1	0.5	750		0.5						

NO_2	Electrochemical	0.2	[3] 0.1		0.5	[4] 0.1	0.5	750		0.5		20,000	50			
NO_2	Spectrophotometric -gas phase		[3] 0.1		0.5	[4] 0.1	0.5			0.5		20,000	50			

[1.] Concentrations of interferents listed must be prepared and controlled to ±10 percent of the stated value.
[2.] Analyzer types not listed will be considered by the Administrator as special cases.
[3.] Do not mix with the pollutant.
[4.] Concentration of pollutant used for test. These pollutant concentrations must be prepared to ±10 percent of the stated value.
[5.] If candidate method utilizes an elevated-temperature scrubber for removal of aromatic hydrocarbons, perform this interference test.
[6.] If naphthalene test concentration cannot be accurately quantified, remove the scrubber, use a test concentration that causes a full scale response, reattach the scrubber, and evaluate response for interference.

17. Amend appendix A to subpart B of part 53 by revising "Figure B-5" to read as follows:

Appendix A to Subpart B of Part 53—Optional Forms for Reporting Test Results

* * * * *

CALCULATION OF ZERO DRIFT, SPAN DRIFT, AND PRECISION

Applicant_____ Date_____

Analyzer_____ Pollutant_____

TEST PARAMETERS		CALCULATIONS	TEST DAY (n)														
			1	2	3	4	5	6	7	8	9	10	11	12	13	14	15
ZERO DRIFT	12 HOUR	$12ZD = C_{max} - C_{min}$															
	24 HOUR	$Z = (L_1 + L_2)/2$															
		$24ZD = Z_n - Z_{n-1}$															
		$24ZD = Z'_n - Z'_{n-1}$															
SPAN DRIFT	24 HOUR	$S_n = \frac{1}{6}\sum_{i=7}^{12} P_i$															
		$SD_n = \frac{S_n - S_{n-1}}{S_{n-1}} \times 100\%$															
		$SD_n = \frac{S_n - S'_{n-1}}{S'_{n-1}} \times 100\%$															
PREC-ISION	20% URL (P_{20})	P_{20} = % STANDARD DEVIATION OF (P_1…P_6)															

	80% URL (P_{80})	P_{80} = % STANDARD DEVIATION OF (P_7…P_{12})															

Figure B-5. Form for calculating zero drift, span drift, and precision (§ 53.23(e)).

* * * * *

Subpart C—Procedures for Determining Comparability between Candidate Methods and Reference Methods

18. Amend §53.32 by revising paragraph (g)(1)(iii) to read as follows:

§53.32 Test procedures for methods for SO_2, CO, O_3, and NO_2.

* * * * *

(g) * * *

(1) * * *

(iii) The measurements shall be made in the sequence specified in table C-2 of this subpart.

* * * * *

Figure E-2 to Subpart E of Part 53 [Removed]

19. Amend subpart E by removing figure E-2 to subpart E of part 53.

PART 58—AMBIENT AIR QUALITY SURVEILLANCE

20. The authority citation for part 58 continues to read as follows:

AUTHORITY: 42 U.S.C. 7403, 7405, 7410, 7414, 7601, 7611, 7614, and 7619.

Subpart B—Monitoring Network

21. Amend §58.10 by adding paragraphs (a)(9) through (11) to read as follows:

§58.10 Annual monitoring network plan and periodic network assessment

(a) * * *

(9) The annual monitoring network plan shall provide for the required O_3 sites to be operating on the first day of the applicable required O_3 monitoring season in effect on January 1, 2017 as listed in Table D-3 of appendix D of this part.

(10) A plan for making Photochemical Assessment Monitoring Stations (PAMS) measurements, if applicable, in accordance with the requirements of appendix D paragraph 5(a) of this part shall be submitted to the EPA Regional Administrator no later than July 1, 2018. The

plan shall provide for the required PAMS measurements to begin by June 1, 2019.

(11) An Enhanced Monitoring Plan for O_3, if applicable, in accordance with the requirements of appendix D paragraph 5(h) of this part shall be submitted to the EPA Regional Administrator no later than October 1, 2019 or two years following the effective date of a designation to a classification of Moderate or above O_3 nonattainment, whichever is later.

* * * * *

22. Section §58.11 is amended by revising paragraph (c) to read as follows:

§58.11 Network technical requirements.

* * * * *

(c) State and local governments must follow the network design criteria contained in appendix D to this part in designing and maintaining the SLAMS stations. The final network design and all changes in design are subject to approval of the Regional Administrator. NCore and STN network design and changes are also subject to approval of the Administrator. Changes in SPM stations do not require approvals, but a change in the designation of a monitoring site from SLAMS to SPM requires approval of the Regional Administrator.

* * * * *

23. Amend §58.13 by adding paragraphs (g) and (h) to read as follows:

§58.13 Monitoring network completion.

* * * * *

(g) The O_3 monitors required under appendix D, section 4.1 of this part must operate on the first day of the applicable required O_3 monitoring season in effect January 1, 2017.

(h) The Photochemical Assessment Monitoring sites required under 40 CFR part 58 Appendix D, section 5(a) must be physically established and operating under all of the

requirements of this part, including the requirements of appendix A, C, D, and E of this part, no later than June 1, 2019.

Subpart F—Air Quality Index Reporting

24. Amend § 58.50 by revising paragraph (c) to read as follows:

§ 58.50 Index reporting.

* * * * *

(c) The population of a metropolitan statistical area for purposes of index reporting is the latest available U.S. census population.

Subpart G—Federal Monitoring

25. Amend appendix D to part 58, under section 4, by revising section 4.1(i) and table D-3 to appendix D of part 58; and by revising section 5 to read as follows

Appendix D to part 58—Network Design Criteria for Ambient Air Quality Monitoring

* * * * *

4. POLLUTANT-SPECIFIC DESIGN CRITERIA FOR SLAMS SITES

* * * * *

4.1 * * *

(i) Ozone monitoring is required at SLAMS monitoring sites only during the seasons of the year that are conducive to O_3 formation (i.e., "ozone season") as described below in Table D–3 of this appendix. These O_3 seasons are also identified in the AQS files on a state-by-state basis. Deviations from the O_3 monitoring season must be approved by the EPA Regional Administrator. These requests will be reviewed by Regional Administrators taking into consideration, at a minimum, the frequency of out-of-season O_3 NAAQS exceedances, as well as occurrences of the Moderate air quality index level,

regional consistency, and logistical issues such as site access. Any deviations based on the Regional Administrator's waiver of requirements must be described in the annual monitoring network plan and updated in AQS. Changes to the O_3 monitoring season requirements in Table D-3 revoke all previously approved Regional Administrator waivers. Requests for monitoring season deviations must be accompanied by relevant supporting information. Information on how to analyze O_3 data to support a change to the O_3 season in support of the 8-hour standard for the entire network in a specific state can be found in reference 8 to this appendix. Ozone monitors at NCore stations are required to be operated year-round (January to December).

TABLE D-3[1] TO APPENDIX D OF PART 58. OZONE MONITORING SEASON BY STATE

State	Begin Month	End Month
Alabama	March	October
Alaska	April	October
Arizona	January	December
Arkansas	March	November
California	January	December
Colorado	January	December
Connecticut	March	September
Delaware	March	October
District of Columbia	March	October
Florida	January	December
Georgia	March	October
Hawaii	January	December

Idaho	April	September
Illinois	March	October
Indiana	March	October
Iowa	March	October
Kansas	March	October
Kentucky	March	October
Louisiana (Northern) AQCR 019,022	March	October
Louisiana (Southern) AQCR 106	January	December
Maine	April	September
Maryland	March	October
Massachusetts	March	September
Michigan	March	October
Minnesota	March	October
Mississippi	March	October
Missouri	March	October
Montana	April	September
Nebraska	March	October
Nevada	January	December
New Hampshire	March	September
New Jersey	March	October
New Mexico	January	December
New York	March	October
North Carolina	March	October

North Dakota	March	September
Ohio	March	October
Oklahoma	March	November
Oregon	May	September
Pennsylvania	March	October
Puerto Rico	January	December
Rhode Island	March	September
South Carolina	March	October
South Dakota	March	October
Tennessee	March	October
Texas (Northern) AQCR 022, 210, 211, 212, 215, 217, 218	March	November
Texas (Southern) AQCR 106, 153, 213, 214, 216	January	December
Utah	January	December
Vermont	April	September
Virginia	March	October
Washington	May	September
West Virginia	March	October
Wisconsin	March	October 15
Wyoming	January	September
American Samoa	January	December
Guam	January	December
Virgin Islands	January	December

[1]The required O_3 monitoring season for NCore stations is January through December.

* * * * *

5. Network Design for Photochemical Assessment Monitoring Stations (PAMS) and Enhanced Ozone Monitoring

(a) State and local monitoring agencies are required to collect and report PAMS measurements at each NCore site required under paragraph 3(a) of this appendix located in a CBSA with a population of 1,000,000 or more, based on the latest available census figures.

(b) PAMS measurements include:

(1) Hourly averaged speciated volatile organic compounds (VOCs);

(2) Three 8-hour averaged carbonyl samples per day on a 1 in 3 day schedule, or hourly averaged formaldehyde;

(3) Hourly averaged O_3;

(4) Hourly averaged nitrogen oxide (NO), true nitrogen dioxide (NO_2), and total reactive nitrogen (NO_y);

(5) Hourly averaged ambient temperature;

(6) Hourly vector-averaged wind direction;

(7) Hourly vector-averaged wind speed;

(8) Hourly average atmospheric pressure;

(9) Hourly averaged relative humidity;

(10) Hourly precipitation;

(11) Hourly averaged mixing-height;

(12) Hourly averaged solar radiation; and

(13) Hourly averaged ultraviolet radiation.

(c) The EPA Regional Administrator may grant a waiver to allow the collection of required PAMS measurements at an alternative location where the monitoring agency can demonstrate that the alternative location will provide representative data useful for regional or national scale modeling and the tracking of trends in O_3 precursors. The alternative location can be outside of the CBSA or outside of the monitoring agencies jurisdiction. In cases where the alternative location crosses jurisdictions the waiver will be contingent on the monitoring agency responsible for the alternative location including the required PAMS measurements in their annual monitoring plan required under §58.10 and continued successful collection of PAMS measurements at the alternative location. This waiver can be revoked in cases where the Regional Administrator determines the PAMS measurements are not being collected at the alternate location in compliance with paragraph (b) of this section.

(d) The EPA Regional Administrator may grant a waiver to allow speciated VOC measurements to be made as three 8-hour averages on every third day during the PAMS season as an alternative to 1-hour average speciated VOC measurements in cases where the primary VOC compounds are not well measured using continuous technology due to low detectability of the primary VOC compounds or for logistical and other programmatic constraints.

(e) The EPA Regional Administrator may grant a waiver to allow representative meteorological data from nearby monitoring stations to be used to meet the meteorological requirements in paragraph 5(b) where the monitoring agency can demonstrate the data is collected in a manner consistent with EPA quality assurance requirements for these measurements.

(f) The EPA Regional Administrator may grant a waiver from the requirement to collect PAMS measurements in locations where CBSA-wide O_3 design values are equal to or less than

85% of the 8-hour O_3 NAAQS and where the location is not considered by the Regional Administrator to be an important upwind or downwind location for other O_3 nonattainment areas.

(g) At a minimum, the monitoring agency shall collect the required PAMS measurements during the months of June, July, and August.

(h) States with Moderate and above 8-hour O_3 nonattainment areas and states in the Ozone Transport Region as defined in 40 CFR section 51.900 shall develop and implement an Enhanced Monitoring Plan (EMP) detailing enhanced O_3 and O_3 precursor monitoring activities to be performed. The EMP shall be submitted to the EPA Regional Administrator no later than October 1, 2019 or two years following the effective date of a designation to a classification of Moderate or above O_3 nonattainment, whichever is later. At a minimum, the EMP shall be reassessed and approved as part of the 5-year network assessments required under 40 CFR section 58.10(d). The EMP will include monitoring activities deemed important to understanding the O_3 problems in the state. Such activities may include, but are not limited to, the following:

(1) Additional O_3 monitors beyond the minimally required under paragraph 4.1 of this appendix,

(2) Additional NO_x or NO_y monitors beyond those required under 4.3 of this appendix,

(3) Additional speciated VOC measurements including data gathered during different periods other than required under paragraph 5(g) of this appendix, or locations other than those required under paragraph 5(a) of this appendix, and

(4) Enhanced upper air measurements of meteorology or pollution concentrations.

* * * * *

26. Appendix G of Part 58 is amended by revising table 2 to read as follows:

Appendix G to Part 58—Uniform Air Quality Index (AQI) and Daily Reporting

* * * * *

TABLE 2.—BREAKPOINTS FOR THE AQI

These breakpoints							Equal these AQI's	
O_3 (ppm) 8-hour	O_3 (ppm) 1-hour[1]	$PM_{2.5}$ ($\mu g/m^3$) 24-hour	PM_{10} ($\mu g/m^3$) 24-hour	CO (ppm) 8-hour	SO_2 (ppb) 1-hour	NO_2 (ppb) 1-hour	AQI	Category
0.000-0.054	.....	0.0 – 12.0	0-54	0.0-4.4	0-35	0-53	0-50	Good
0.055-0.070	.....	12.1 – 35.4	55-154	4.5-9.4	36-75	54-100	51-100	Moderate
0.071-0.085	0.125-0.164	35.5 – 55.4	155-254	9.5-12.4	76-185	101-360	101-150	Unhealthy for Sensitive Groups
0.086-0.105	0.165-0.204	[3]55.5 - 150.4	255-354	12.5-15.4	[4]186-304	361-649	151-200	Unhealthy
0.106-0.200	0.205-0.404	[3]150.5 - 250.4	355-424	15.5-30.4	[4]305-604	650-1249	201-300	Very Unhealthy
0.201-([2])	0.405-0.504	[3]250.5 - 350.4	425-504	30.5-40.4	[4]605-804	1250-1649	301-400	Hazardous
([2]).....	0.505-0.604	[3]350.5 - 500.4	505-604	40.5-50.4	[4]805-1004	1650-2049	401-500	

[1] Areas are generally required to report the AQI based on 8-hour ozone values. However, there are a small number of areas where an AQI based on 1-hour ozone values would be more precautionary. In these cases, in addition to calculating the 8-hour ozone index value, the 1-hour ozone index value may be calculated, and the maximum of the two values reported.
[2] 8-hour O_3 values do not define higher AQI values (> 301). AQI values > 301 are calculated with 1-hour O_3 concentrations.
[3] If a different SHL for $PM_{2.5}$ is promulgated, these numbers will change accordingly.
[4] 1-hr SO_2 values do not define higher AQI values (≥ 200). AQI values of 200 or greater are calculated with 24-hour SO_2 concentration.