PAPER NO. 87-1567

SELECTED HARVESTING MACHINES FOR SHORT ROTATION INTENSIVE CULTURE BIOMASS PLANTATIONS

by

Sammy Woodfin
Agricultural Engineer
Tennessee Valley Authority
Norris, Tennessee

Doug Frederick
Forest Research
North Carolina State University
Raleigh, North Carolina

Bryce Stokes
Forest Engineer
USDA, Forest Service
Auburn, Alabama

Written for presentation at the 1987 International Winter Meeting of the AMERICAN SOCIETY OF AGRICULTURAL ENGINEERS

Hyatt Regency Chicago
in Illinois Center
December 15-18, 1987

SUMMARY:

Three different harvesting systems were observed and analyzed for productivity and costs in a short rotation intensive culture plantation of 2 to 5 year old sycamore. Individual machines were compared to create an optimum system.

KEYWORDS: Forest Engineering, Harvesting Machinery, Woodlots

American Society of Agricultural Engineers

St. Joseph, MI 49085-9659

Papers presented before ASAE meetings are considered to be the property of the Society. In general, the Society reserves the right of first publication of such papers, in complete form. However, it has no objection to publication, in condensed form, with credit to the Society and the author. Permission to publish a paper in full may be requested from ASAE, 2950 Niles Rd., St. Joseph, MI 49085-9659.

The Society is not responsible for statements or opinions advanced in papers or discussions at its meetings. Papers have not been subjected to the review process by ASAE editorial committees; therefore, are not to be considered as refereed.

SELECTED HARVESTING MACHINES FOR SHORT ROTATION INTENSIVE CULTURE BIOMASS PLANTATIONS

INTRODUCTION

Renewable resources for energy may have growing importance as reserves of non-renewables dwindle. Research on the renewable attributes of wood has been intensified in the form of short rotation energy plantations. Test plots for growing trees under intense management regimes have exhibited promising productivity rates. However, the small size of the mature stems has dictated the need for innovations in harvesting methods and machines (Curtin and Barnett, 1986). While conducting growth and yield tests of potential plantation species, numerous harvesting machines were evaluated in a series of annual tests on stands of different ages. Beginning in the winter of 1984 and continuing through the winter of 1987, several different machines were used to harvest sycamore (Platanus occidentalis L.) research plots in south Alabama. The machines have varied from manually operated devices and conventional forestry equipment to sophisticated prototypes. This paper documents the results of these evaluations as well as a rationale for the evolving development of short rotation intensive culture (SRIC) harvesting equipment.

STAND DESCRIPTION

In January 1982, a research stand of sycamore was established in south Alabama. The stand was divided into four square plots of two hectares each. Each plot was established in the same manner to minimize variations for future comparisons. The trees were planted as seedlings at a 1.2 X 3.0 m. spacing (2818 trees per hectare). Tree sizes at harvest are listed in Table 1 (Frederick, 1984, Frederick, 1987). The plan was to harvest one of the plots annually beginning in the winter of 1984. This has been completed along with some additional testing on the coppice regeneration that resulted from the 1984 harvesting tests. The harvesting plan allowed for measuring the growth and yield rates by age as well as evaluating the effect of tree size on harvesting productivity.

Table 1. SYCAMORE SEEDLING AND COPPICE TREE MEASUREMENTS AT TIME OF HARVEST

Year of Harvest	Coppice or Seedling	Age of Stems	DBH (cm)	Height (m)	Weight (Green Kg)
1984	Seedling	2 yr.	4.34	4.8	9.2
1985	Seedling	3 yr.	6.30	7.5	20.4
1986	Seedling	4 yr.	6.71	7.9	24.2
1987	Seedling	5 yr.	7.62	8.8	32.5
1987	Coppice	3 yr.	4.11	6.0	12.4

Although the terrain was a poorly drained flat, generally dry weather during the four testing years kept ground conditions in good shape and not a factor in our evaluations.

DESCRIPTION OF SYSTEMS

The first harvesting test was conducted in the winter of 1984 using conventional logging equipment. It was generally accepted before testing that this method would not prove economical given the small stem size. However, a benchmark for future development and comparison had to be established. The equipment mix consisted of chain saws, a Hydro-ax 411(1) feller buncher, a Timberjack 450 grapple skidder, and a Morbark whole tree chipper (Frederick et al, 1984). Trees were felled manually with chain saws and mechanically with the Hydro-ax feller buncher, skidded with the grapple skidder, and processed with the chipper. This test established the need for equipment with higher productivity in small diameter stands.

Highly productive machinery meant searching through prototype developments for the 1985 harvest test. A continuous-speed felling and bunching machine was located in Canada and transported to the test site. This prototype machine, called the Hyd-Mech FB-7, was used to mechanically fell and bunch the stems which were skidded by a Caterpillar 518 grapple skidder and a Kubota 295DL farm tractor and processed with a Morbark whole tree chipper (Stokes et al, 1986). The same system, except for the Kubota tractor, was further evaluated in the 1986 harvest.

A new approach was taken in 1987. Although the previously tested prototype was very productive, its high purchase price, limited usage, and complexity were concerns. Therefore, attention was turned to low capital machines and attachments for farm tractors (which were assumed already owned in many cases) or smaller forestry machines which might be applicable in short rotation stands. The tested system included chain saws with a felling frame attachment, a Morbark Mark V three-wheeled feller buncher, a 24 kW and a 64 kW farm tractor each with a solid lift boom mounted on the 3-point hitch, and a 41 kW farm tractor with a 3-point hitch mounted knuckle-boom loader coupled with a utility wagon. The trees were felled with the chain saw felling frame and the Morbark feller buncher, cable skidded from pre-choked bunches of wood by the farm tractors or forwarded by the tractor/loader combination, and processed by the chipper.

All the harvesting tests from 1984 to 1987 were conducted as a cold system. This allowed each function of the harvest to be completed before the initiation of another function. Each operation was able to run at full speed with no operational delays caused by other functions.

(1) The use of brands and tradenames is for the reader's convenience and is not an endorsement by TVA, N.C. State University, and U.S. Forest Service.

DESCRIPTION OF MACHINES

The machines used in the 1984 test were all conventional forestry equipment from a local logging operation. Specifications are listed in Table 2.

In 1985, a complex prototype felling and bunching machine called the FB-7 was tested. The prototype felling unit was a continuous-speed feller buncher manufactured by Hyd-Mech Engineering Ltd, Woodstock, Ontario (figure 1). The machine was developed for harvesting short-rotation energy plantations with tree diameters of approximately 18 cm at the stump. The felling head was mounted on an articulated, four-wheel drive Versatile tractor powered by a 45 kW engine. The cutting mechanism consisted of dual 61 cm circular saws, counter-rotating at 2000 rpm. As trees were cut, they were forced with hydraulic arms into an accumulator on either side of the head. Choice of accumulator was made by the operator and was controlled by use of a switching gate and hydraulic arms. The accumulator was rotated to dump the bunched trees parallel to the direction of travel and alongside the feller buncher without interrupting forward travel. The accumulators allowed unloading to either side, away from the stand for clearance on the next pass (Stokes et al,1986).

The felling head was controlled by an OMRON SYSMAC S6 programmable controller which operated the arms that pushed trees from the cutting area into the accumulating area and also the arms that held them upright. Sensors located in the cutting opening and on the accumulators initiated operating cycles of the accumulating devices. The operator drove the machine at a constant speed, only slowing to insure that the push arms had reset before cutting the next tree. The dumping sequence was also operated by the controller after the operator had initiated the sequence (Stokes et al, 1986).

Extraction in 1985 was completed with two different skidders; a small, four-wheel drive Kubota farm tractor and a large Caterpillar grapple skidder. The Kubota 295DL with a 26 kW engine had a three-point hitch hydraulic grapple with a 66 cm opening. The small tractor was equipped with a bucket loader from which the bucket had been replaced with a straight blade. A canopy with a protective grill had been installed. The Caterpillar 518 was standard forestry equipment (Stokes et al, 1986).

Testing in 1987 took on a different perspective. Emphasis was placed on lower priced machines and attachments for farm tractors or smaller forestry equipment that might be better adaptable to the small, plantation stems. Two felling methods were tested; a manual method using a chain saw with a felling frame and a mechanical method using a Morbark Mark V feller buncher. The manual method was enhanced by a Scandinavian felling attachment which fits a standard chain saw (figure 2). The attachment allows the operator to directionally fell trees while remaining in a standing position. It is constructed from light weight metal

conduit and attaches to the saw with ease. A modification was made to improve the felling frame performance.

The modification consisted of completing the conduit loop around the saw body and adding an anchoring spike at an appropriate pivot location. The ideal pivot location was even with the width midpoint of the saw chain guide bar. The improved design proved several advantages: (1) While cutting, torque can be applied to the saw for aid in cutting. Before the modification this was very difficult if not impossible. (2) By allowing torque to be applied to the saw through the frame, small trees and brush can be felled with one hand which enables the other hand to aid in directional felling and bunching. (3) The attachment is now free standing. It can be left in the upright position if the operator needs the use of both hands for another task. (4) The weight of the saw is supported by the modified frame resting on the ground. This burden is no longer felt by the operator except while moving from tree to tree. (5) With the spike in the ground, safety aspects are greatly improved. Kickback has been virtually eliminated. In general terms, the ease of operation of the felling frame has been greatly improved--reducing fatigue while improving safety and productivity.

The Morbark Mark V is a three-wheel feller buncher with a conventional 35.6 cm hydraulic shear. Each of the two drive wheels are independently and hydraulically powered which coupled with its small size make the machine very maneuverable.

Three machines and two methods of extraction were tested in 1987. A small knuckle boom loader was mounted on the three-point hitch of a 41 kW farm tractor. A utility wagon was coupled to the tractor for use as a low-capital forwarder. The loader was a Farmi Model S with maximum lift of 454 Kg at the maximum reach of 4.0 m. Trees were loaded on the wagon and hauled to the landing.

The second method involved mounting a solid boom on the three-point hitch of 24 kW and 64 kW farm tractors to skid pre-choked bunches (figure 3). Both these tests required two people; one for setting the choker and one to operate the tractor. The operator had to unhook the load at the landing. The smaller tractor was four-wheel drive while the larger tractor was two-wheel drive.

Table 2. 1984-1987 EQUIPMENT SPECIFICATIONS

Name/Model	Type	Kilowatts	1987 Price
Chain saws	--	--	$400
Hydro-ax 411	Feller buncher Rubber tired Four-wheel drive Hydrostatic trans. 35.6 cm shear	63 kW	$94,000

Table 1. 1984-1987 EQUIPMENT SPECIFICATIONS (continued)

Name	Type	Horsepower	1987 Price
Timberjack 450	Skidder Rubber tired Four-wheel drive 2.54 m grapple	89 kW	$85,000
Morbark RXL27	Whole tree chipper 69 cm capacity	447 kW	$235,000
Hyd-Mech FB-7	Feller buncher Continuous speed Dual circular saws 18 cm stump capacity Attached to Versatile tractor	45 kW	$65,000
Caterpillar 518	Skidder rubber tired Four-wheel drive 2.54 m grapple	97 kW	$88,000
Kubota 295DL	Farm tractor rubber tired Four-wheel drive 66 cm grapple	26 kW	$15,000
Morbark Mark V	Feller buncher Three-wheeled 35.6 cm shear	48 kW	$65,000
Chain saw with Felling Frame	--	--	$500
Ford 7600	Large farm tractor Two-wheel drive 3-point hitch solid boom	64 kW	$19,000
Ford 1910	Small farm tractor Four-wheel drive 3-point hitch solid boom	24 kW	$10,000
Massey-Ferguson 235	Mid-size farm tractor Two-wheel drive 3-point hitch knuckle boom loader	41 kW	$23,000

PROCEDURE

The harvesting was conducted in early spring of each year to promote regeneration. Coppicing, or self-regeneration, is a important element in the hardwood energy plantation concept. Dormant season harvesting is required to insure maximum vigor from the coppice regeneration (Ranney et al, 1983). The dormant season in south Alabama is short, ending sometime in mid-March. All the tests were all conducted in much the same manner. Stand sampling was completed before harvesting. Then, each harvesting function was tested separately (felling, skidding/forwarding, and chipping). This eliminated any operational delay because of function interactions. Special effort was made in all operations to minimize the damage to residual stumps which might have adversely affected coppicing (Ranney et al, 1985). Large skidders were backed down rows while gathering loads to avoid direct contact between the skidder tires and the residual stumps.

All the felled and bunched material was removed to the edge of the test plot and cold decked for future processing. This required some re-skidding to feed the chipper. The machines were observed and their productivities documented with standard time study techniques. Some tests were video taped for future analysis. All material harvested was weighed after processing to determine site productivity. The 1987 test included the harvest of two and one half acres of coppice besides the five acres of seedlings.

ANALYSIS AND RESULTS

The Tennessee Valley Authority's computer program, Harvesting System Analyzer (HSA)(Hendricks, 1985), was used to calculate fixed and operating costs for all the tested equipment shown in Table 3. The time study data (Table 4)(Frederick et al, 1984,Stokes et al, 1986,Woodfin 1987) was combined with the machine operating costs to achieve the harvesting cost of each machine and harvesting function (Table 5). In addition, to make more equitable comparisons of the different machines, productivity predictions for the tests before 1987 were made by adjusting tree size to match the 1987 test. An assumption was made that the machines would have the same productivity rate in trees per hour with the larger tree size as with the smaller tree size. This resulted in two productivity and cost figures for all machines except those tested in 1987 (Table 4 and 5). The first number is the observed productivity or cost. The second number is the adjusted productivity or cost based on the average dbh in 1987 of 7.62 cm.

Costs were calculated on a scheduled machine hour (SMH) basis. The assumption was made that a working year consisted of 2000 scheduled hours and that all the machines, except the FB-7 cutting head, could be used in some other capacity during the year when they would not be needed for short-rotation harvesting.

Felling

As expected, felling with the Hydro-Ax 411 was very expensive when cutting two year old seedlings(Table 5). The small tree size and the large capital expense were principal reasons for the high cost. Larger trees, such as in later felling tests, would make the Hydro-Ax 411 more cost effective. When production rates (trees per hour) are held constant as tree size increases, production costs become competitive with the other methods (Table 4 and 5). Mechanical feller-bunchers offer some convenience of being adaptable to many forestry harvesting operations, however, there are some concerns on the damage done to the residual stumps by hydraulic shearing which may impact the coppice regeneration (Ranney et al, 1985).

Since the small size of the stems reduced the productivity in the 1984 test, the 1985 test examined the high productivity potentials of the Hyd-Mech FB-7. It was by far the most productive felling machine tested (Table 3 and 4). When operating properly, the machine caused very little stump damage. It was surpassed only by the chain saw. The twin circular saw arrangement severed the trees cleanly and efficiently. The continuous-speed felling and bunching ability was a good match for a uniform size crop planted in rows. However, row spacing must be wide enough to accommodate one half the machine width since each row must be straddled while cutting. This reduces the machine's applicability to plantations with between-row spacings of 1.1 m or greater.

Within-row spacing also had an effect on productivity. At close spacings, the operator had to stop or slow the travel of the machine to allow time for the grabbing arms to recycle. This lowered productivity. However, once past the spacing for which the arms can be recycled without slowing forward travel, wider spacings would decrease productivity. Some minor redesign of the accumulating function should solve this problem (Stokes et al, 1986).

The major concerns with the FB-7 were two fold. First, the outstanding productivity of the machine was a result of specialization. This specialization limits its use to short rotation harvesting which only takes place during three to four months of the year. Although the carrier can be used in other capacities, the limited use of the cutting head creates high fixed cost when calculated on an annual scheduled machine hour basis (Table 2). Second, the machine's productivity was greatly enhanced by highly technical and complicated electronic components. The durability of these components is questionable as is the availability of the technical expertise required to maintain them.

Concerns with machine flexibility, simplicity, and lower capital expenses influenced the decision to test the chain saw with the felling frame attachment and the Morbark Mark V feller buncher. Fixed and operating costs for these machines are very attractive.

Both machines were tested in a five year old seedling stand and a three year old coppice stand. The small size of the coppice stems was complicated further by the average 2.4 stems that sprouted from each stump. The feller buncher operator had difficulty gathering all the stems within the head before severance. This severely hampered productivity as did the small tree size. Production rates improved while harvesting the seedling stand. Stump damage was reduced compared with previous shearing systems since extra care was taken to properly sharpen and shim the cutting blades. There were no significant reductions on growth or survival rates due to shearing the trees versus saw severance (Campbell, 1987).

The chain saw with the felling frame attachment caused the least stump damage. It was by far the most cost effective machine to operate and while working in the larger stems was very productive. Although it was labor intensive, a productive rate could be maintained throughout a scheduled work day especially after the modification to the felling frame.

However, manual bunching of the stems after directional chain saw felling was strenuous and unproductive. Since mechanized skidding of small, unbunched stems is also unproductive, this method of felling short rotation stands has few practical applications unless other technology advances are made. Such an advance may be an attachment capable of simultaneously accumulating and forwarding stems. This was attempted by TVA with some limited success (figure 4). Successful development could result in reduced system costs.

Extraction

Four methods of extracting the felled and bunched material were tested between 1984 and 1987. All the test plots were the same size which resulted in an average skidding/forwarding distance of approximately 79 m. Since the harvesting system was always a cold system, the material was cold-decked for later processing. Because of limited area, the stems had to be piled. While this was no problem for the large grapple skidders, the farm tractors without blades or knuckleblooms could not satisfactorily pile the stems. This required the use of an auxiliary machine to pile; an old cable skiddder was available in this case. However, placing a front end loader on the farm tractors would negate the need for auxiliary machines even though some skidding productivity would be lost.

The grapple skidders were fully capable of removing the small trees. However, until stems get to the size in the 1987 tests (avg. 3 inch dbh), high cost limits their application. Their inability to maneuver in tight places required that they be backed down some of the rows, to avoid residual stump damage while gathering stems. This inflated cycle times and decreased productivity. Other makes of grapple skidders with differential lock options may perform this function better with their improved handling ability and reduced ground disturbance feature.

The Kubota tractor provided lower fixed and operating costs, however, not low enough to offset its lower productivity (Stokes et al, 1986). Difficulties in accumulating bunches, the small size of the grapple, and the care taken to reduce stump damage were the main reasons for lower productivity.

A new approach to extracting energy wood was the knuckle-boom loader mounted on a farm tractor. This arrangement, when pulling a wagon, created a low capital forwarder. Forwarding the wood to the landing reduced the dirt and grit collected by the stems compared with skidding. The knuckle-boom, also, allowed the wood to be piled at the landing for easy recovery by a chipper. However, these advantages came at the expense of productivity. The forwarder's productivity was lower than other extracting methods except for the Kubota. The short forwarding distances were a definite handicap to the forwarder. Longer extraction distances may produce competitive results.

The other end of the productivity spectrum was demonstrated by cable skidding with farm tractors. The solid boom attached to the 3-point hitch provided some lift to aid the skidding of the pre-choked bunches. The bunches in this test were built by the Morbark Mark V feller buncher and bigger than bunches in previous tests. This fact enhanced the farm tractor's productivity. However, the operation was more labor intensive than any other extraction method. Two people were required for efficient use of the tractors. One person operated the tractor while another person set chokers. Setting the chokers was physically demanding and required the workers to switch jobs occasionally. However, a greater percentage of productive time was made available to the tractor for moving wood since very little time was needed for accumulating a load (average hookup time was 10 seconds). The tractor simply backed up to a bunch and the choker setter hooked the cable to the boom. Extra chokers let the choker setter almost always have a bunch ready for hooking when the tractor returned from the landing.

Another feature which was instrumental to the farm tractor's productivity was the tractor's speed and maneuverability. The farm tractors were capable of turning around within the plantation without causing significant damage to the stumps. This saved valuable time compared with backing down rows to gather stems. However, the tractors were not capable of stock piling sufficiently at the landing. Although a auxiliary machine was used, an alternative solution to the piling problem may be the addition of a front end loader to the tractors.

Chipping

Chipping results were only documented during the 1985 tests. The average time required to chip a van load (21.9 green Mg) was 49.1 min, resulting in 26.8 green Mg per productive machine hour (PMH). The stems that had been cold-decked were re-skidded to the chipper. This operation could have been avoided if the cold-deck

had been established within boom reach of the planned chipper location or in such a manner that the chipper could be moved to multiple piles.

Chipper productivity data was for working in the smaller stems of 1985 which averaged 2.48 inch dbh. A smaller chipper might better match the stem size and result in better cost effective processing. However, as tree size increases with harvesting age, the larger chipper, as tested, should be the preferred machine.

System Analysis

It is difficult to compare the performance of the different systems tested because of the changing tree size. It is even more difficult to compare individual machines within the different systems. However, potential productivity levels for each machine were estimated by keeping observed productivity rates (trees per hour) constant while increasing tree size to match the 1987 tests. Through four years of testing, the average dbh increased only 3.28 cm while the average weight increased 23.3 Kg. The effects on productivity rates (trees per hour) by changing the average tree diameter by small amounts were considered minor when compared with increased volumes realized through larger trees. Although this assumption means reduction in precision and must be used with caution, it appears valid for the range of diameters encountered in the tests and places all the machine production levels in a form for direct comparison (Table 4 and 5).

The extrapolated data shows the least cost system to be felling and bunching with the Hyd-Mech FB-7, skidding and re-skidding with the CAT 518, and chipping with the Morbark RXL27 (Table 6). However, slight modifications to existing equipment or new developments may provide improved systems and costs.

One such modification to existing equipment might include equipping the farm tractors used for skidding with front end loaders. This would allow the tractors to pile at the cold-deck landing and eliminate an auxiliary machine. Assuming a conservative 20 percent reduction in the farm tractor skidding productivity when used to skid and pile, the exclusion of the auxiliary piling tractor, and the slight increase in cost of the front end loader, an improved system would include the Hyd-Mech FB-7, farm tractor skidding, and Morbark chipping (Table 7).

A new development which could simultaneously gather and forward the chain saw felled trees might, also, provide an improved system. The trees would be felled perpendicular to their planted row. Some research has been completed on a modified front end loader mounted on a farm tractor that will scoop the felled stems off the ground, accumulate them, and secure them for transporting to the landing. Successful development could change the system to that of Table 8. One appealing aspect of this system is the low capital cost and utilization of existing equipment, perhaps, already owned by a potential energy wood producer.

Table 3. MACHINE RATE SUMMARY

Machine	Purchase Price ($)	Life (yrs)	Avail-ability (%)	Fixed(1) Cost ($/SMH)	Operating Cost ($/SMH)	Total Cost ($/SMH)
Chain saw	400	1	60	0.24	1.02	1.26
Hydro-ax 411	102,000	5	70	15.06	9.46	24.52
Timberjack 450	103,000	5	75	15.20	10.12	25.32
Morbark RXL27	249,000	6	60	32.68	23.28	55.96
Hyd-Mech FB-7						
(carrier)	40,000	5	75	5.90	4.33	10.23
(attachment)	25,000	5	70	14.76	3.07	17.83
(total)	65,000			20.66	7.40	28.06
Caterpillar 518	88,000	5	75	12.99	8.30	21.29
Chain saw w/ Felling Frame	500	1	70	0.29	1.34	1.63
Morbark Mark V	65,000	5	70	9.59	5.74	15.33
Ford 7600	19,000	5	75	2.80	3.68	6.48
Ford 1910	10,000	5	75	1.48	1.77	3.25
Massey-Ferguson 235 /Loader	23,000	5	70	3.39	3.07	6.46
Kubota 295DL	15,000	5	70	2.21	2.00	4.21
Support Equipment						
Skidder/ blade for piling	10,000	5	10	1.42	0.74	2.16

(1) assumed 10% salvage value, excludes labor

Table 4. MACHINE PRODUCTIVITY ANALYSIS(1)

Machine	Actual Productivity(1) (Green Mg/SMH)	DBH(2) (cm)	Predicted Productivity(3) (Green Mg/SMH)
Chain saw	1.6	4.34	5.7
Hydro-ax 411	3.1	4.34	10.9
Timberjack 450	3.9	4.34	13.7
Morbark RXL27	16.1	4.34	25.5
Hyd-Mech FB-7	12.2	6.30 & 6.71	19.4
CAT 518(Skidding)	6.0	6.30	9.5
(Re-skidding)	10.5	6.30	16.9
Chain saw w/ Felling Frame	7.2	7.62	7.2
Morbark Mark V	7.5	7.62	7.5
Ford 7600	19.5	7.62	19.5
Ford 1910	7.0	7.62	7.0
Massey-Ferguson 235/Loader	4.6	7.62	4.6
Kubota 295DL	2.2	6.30	3.5

(1)observed productivity based on average tree size of the year tested
(2)average dbh at the age of testing
(3)estimated productivity based on average tree size in the 5 year old stand of the 1987 test (7.62 cm).

Table 5. HARVESTING COST ANALYSIS

Machine(year tested)	Actual Cost(1)	Predicted Cost(3)
	Dollars / Green Mg	
Chain saw(1984)	5.96	1.71
Hydro-ax 411(1984)	10.68	3.03
Timberjack 450(1984)	8.66	2.46
Morbark RXL27(1984-87)	4.00	2.52
Hyd-Mech FB-7(1985-86)	3.00	1.89
Caterpillar 518(1985-86)	4.96	1.80
Chain saw w/ Felling Frame(1987)	1.41	1.41
Morbark Mark V(1987)	3.16	3.16
Ford 7600(1987)(2)	1.20	1.20
Ford 1910(1987)(2)	2.89	2.89
Massey-Ferguson 235/Loader(1987)	3.22	3.22
Kubota 295DL(1986)	5.83	3.59
Piling Tractor(1987)	2.38	2.38
Caterpillar 518 (Re-skidding) (1985-86)	2.02	1.25

(1)based on actual productivity and includes labor at $8.50/SMH; (2)includes 2 laborers; (3)based on predicted productivity which was calculated by using actual trees per hour data while adjusting tree size to the 1987 size of 32.5 Kg. per tree and includes labor at $8.50/SMH.

Table 6. EXTRAPOLATED DATA SYSTEM ANALYSIS

Harvesting Function	Machine/ Method	Estimated Costs ($/Green Mg) (from Table 5)	Selected System Costs ($/Green Mg)
Felling			
	Hydro-Ax 411	3.03	
	Chain saw	1.71	
	Hyd-Mech FB-7	1.89	1.89
	Morbark Mark V	3.16	
	Chain saw/ Felling Frame	1.41	
Bunching	Labor for Bunching Saw Felled Stems	2.50	
Extraction			
	Timberjack 450	2.46	
	Caterpillar 518	1.80	1.80
	Kubota 295DL	3.59	
	Ford 7600	1.20	
	Ford 1910	2.89	
	Massey Ferguson 235/loader	3.22	
Re-skidding	Caterpillar 518	1.25	
Piling	Piling Tractor	2.38	
Chipping	Morbark RXL27	2.52	2.52
		Total	6.21 (1)

(1) Total system costs may require an additional $1.25 in some system arrangements where re-skidding wood to the chipper from a cold deck is necessary.

Table 7. MODIFICATIONS FOR SYSTEM IMPROVEMENT

Harvesting Function	Machine	Costs ($/green Mg)
Felling and Bunching	Hyd-Mech FB-7	1.89
Extraction/Cold-deck	Ford 7600/ Front end loader	1.57
Chipping	Morbark RXL27	2.52
	Total	5.98 (1)

(1) Total system costs may require an additional $1.25 in some system arrangements where re-skidding wood to the chipper from a cold deck is necessary.

Table 8. DEVELOPMENTS FOR SYSTEM IMPROVEMENT

Harvesting Function	Machine	Costs ($/green Mg)
Felling	Chain Saw/ Felling Frame	1.41
Bunching/Extraction	Farm Tractor/ Attachment for Gathering Stems	1.65(1)
Chipping	Morbark RXL27	2.52
	Total	5.58 (2)

(1) based on TVA testing and simulation
(2) Total system costs may require an additional $1.25 in some system arrangements where re-skidding wood to the chipper from a cold deck is necessary.

CONCLUSIONS AND RECOMMENDATIONS

Beginning in the winter of 1984 and continuing through the winter of 1987, several different machines were used to harvest sycamore research plots in south Alabama. The machines varied from manually operated devices to conventional forestry equipment to sophisticated prototypes. Short rotation energy plantations have many qualities which enhance harvesting productivity. Uniform tree size, straight rows, low underbrush, and better than average ground conditions are all benefits. However, the one most important conclusion may be the effects of tree size. Until further developments, it may be necessary to schedule harvesting around tree size to maximize any potential margin.

The field tests show a system consisting of the Hyd-Mech FB-7 and the extraction machines tested in 1987 to be the least cost system (Table 5). However, that system had the advantage of working in larger stems which improves productivity. This advantage can be excluded by extrapolating previous production levels to increased tree size. Using the same size trees for all machines, a system utilizing the machines tested in 1985 appears to be the least cost as shown in Table 6. However, due to machine complexity, high capital cost, and specialization, modifications and new developments are still needed. Especially in the area of coppice harvesting where multiple stem trees present problems.

Acknowledgments

This research is supported by Scott Paper Company, N.C.State University, Tennessee Valley Authority, U.S.Forest Service, and the Short Rotation Woody Crops Program through Oak Ridge National Laboratory under subcontract No. DE-AI05-840R21478.

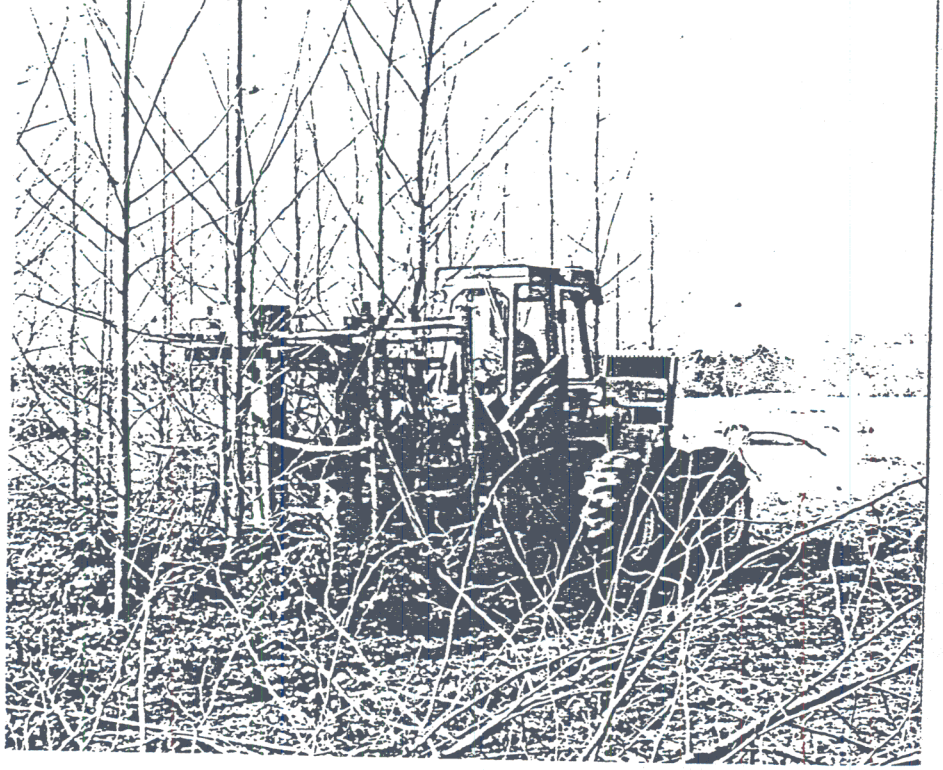

Figure 1. Hyd-Mech FB-7 operating in 3-year old sycamore plantation.

Figure 2. Chain saw felling frame (Courtesy TVA).

Modification

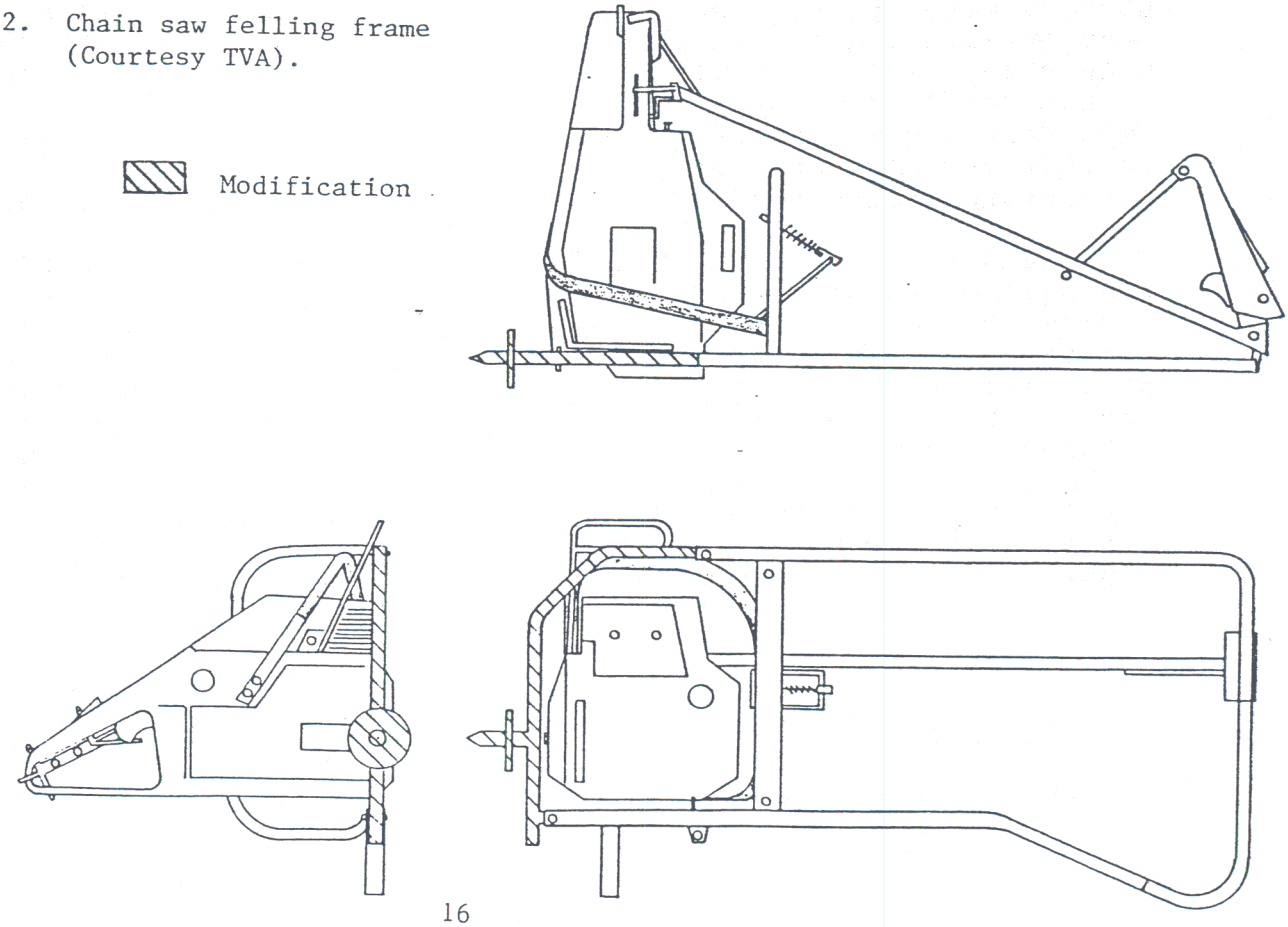

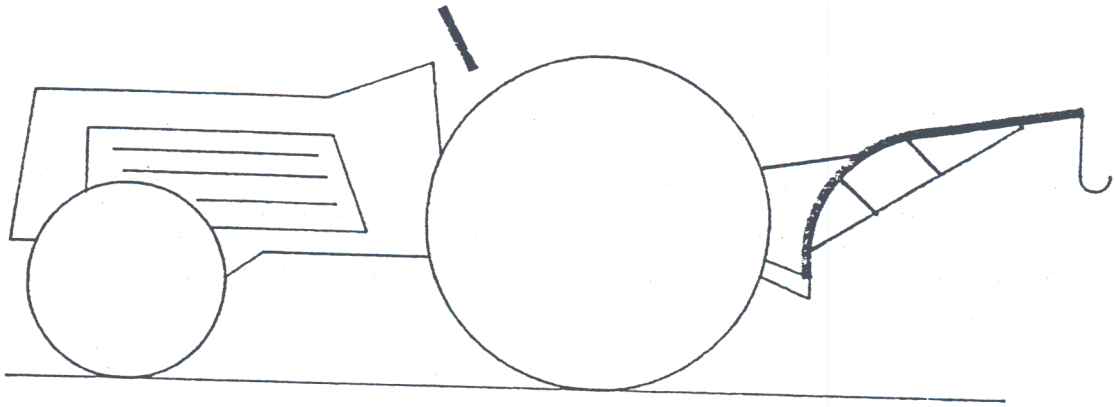

Figure 3. Farm tractor with solid boom mounted on 3-point hitch.

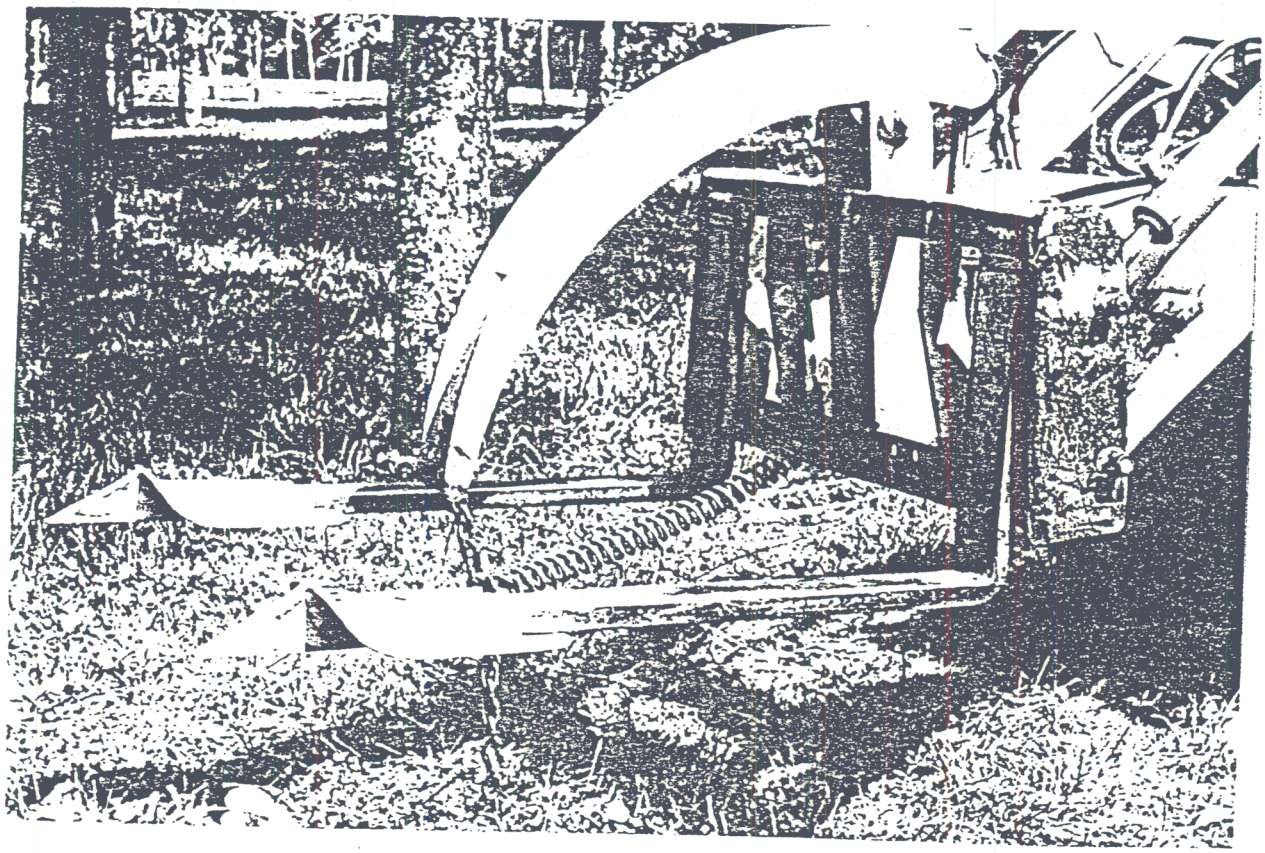

Figure 4. Prototype for gathering and accumulating chain saw felled stems in biomass plantation (Courtesy TVA).

REFERENCES

Campbell,S.1987.personal communication.Research Forester,Scott Paper Company, Mobile, Alabama.

Curtin, Dennis and Paul Barnett.1986.Development of Forest Harvesting Technology: Application in Short Rotation Intensive Culture (SRIC) Woody Biomass. Technical Note B58. Tennessee Valley Authority, Division of Land and Economic Resources, Norris, Tennessee. 90 pp.

Frederick,D.J.,R.R.Resovsky and J.L.Orrell.1984.Yields, Efficiency and resources of Harvesting Two-year-old Close-spaced Sycamore in Alabama.N.C.State University Hardwood Research Cooperative Report, Raleigh, North Carolina. 10 pp.

Frederick,D.J.1987.personal communication.N.C.State University Hardwood Research Cooperative, Raleigh, North Carolina.

Hendricks,G.L. and D.T.Curtin.1985.Description of a Microcomputer-based Timber Harvesting Model. Paper No. 85-1610. Presented at the 1985 winter meeting of American Society of Agricultural Engineers, Hyatt Regency, Chicago, Ill.Dec.17-20, 1985.10 pp.

Ranney et al.1983.Short Rotation Woody Crops Program: Annual Progress Report for 1983.Department of Energy, Environmental Sciences Division publication No. 2378.Oak Ridge National Laboratory, Oak Ridge, Tennessee.91 pp.

Ranney et al.1985.Short Rotation Woody Crops Program: Annual Progress Report for 1985.Department of Energy, Environmental Sciences Division publication No. 2647. Oak Ridge National Laboratory, Oak Ridge, Tennessee.79 pp.

Stokes,B.J.,D.J.Frederick and D.T.Curtin.1986.Field Trails of a Short-rotation Biomass Feller Buncher and Selected Harvesting Systems.Biomass vol.11.Elsevier Applied Science Publishers Ltd, England. p. 185-204.

Woodfin,S.L.1987.unpublished time study and cost analysis. Tennessee Valley Authority.Division of Land and Economic Resource. Norris,Tennessee.